NL4500G4 Case IH TRIDENT

MULTAPPLIER / MULTIBIN

Operator's Manual

UNIT SERIAL NUMBER _____

INSERT SERIAL NUMBER_____

MANUAL NUMBER: 313974-AA-B

EFFECTIVE 02/2022

1330 76TH AVE SW
CEDAR RAPIDS, IA 52404-7052
PHONE (800) 363-1771 | FAX (319) 286-3350
www.newleader.com

Copyright 2021 New Leader Manufacturing

Table of Contents

Interactive Features 5
Warranty 6
Preface 7
Safety 8
- Important Safety Information 8
- Safety Alert Symbols 8

General Safety Rules 9
Safety Decals 19
- Safety Decal Maintenance 19
- Safety Decal Installation 19

Informational Decals 23
Installation 25
- Hydraulic Requirements 25
- Truck Requirements 25
- Controller Requirements 26
- Lifting the Spreader 26
- Installing Body 27
- Securing to Frame 28
- Fender Installation 29
- Side Board Installation 30
- Light Installation 30
- Hydraulic Hose Installation 31
  - Hydraulic Pump Installation 31
  - Hydraulic Hose Installation Guide 32
- Filling Hydraulic System 33
- Electrical Connections 33
  - ISOBUS Connections 33

Insert Installation 34
- Spreader Preparation 34
  - Feedgate Adjustment 36
- Insert Preparation 36
- Insert Installation 36
- Lower Divider - Multibin 41
- Hillside Divider & Conveyor Cover - MultApplier 43
- Micro Cover Installation 44
- Electrical Connections 45
- Insert Removal/Endgate Installation 45
- Hydraulics 46
- Install Valve Bracket 48
- Install Valve 48
- Install Clamp Assemblies 49
- Hydraulics Removal 53
- Electrical 54
- Insert Removal/Endgate Installation 60

General Description 61
Introduction 62
Dimensions & Capacities 66
Initial Start-Up 72
General Operating Procedures 73

Table of Contents

Lubrication & Maintenance 75
- Preventative Maintenance Pays! 75
- Hydraulic System 75
  - Service Schedule 75
- Conveyor Chain 76
- Hydraulic Hose 76
- Conveyor Belt Maintenance 78
- Bin Sensor 78
- Replace MultiBin Metering Roller 79
- Conveyor Gearcase 84
- Lubrication of Bearings 84
- Fasteners 84
- Clean Up 84

Lubricant & Oil Specifications 85
- Hydraulic System 85
- Gearcase Lubricant 85
- Grease Gun Lubricant 85
- Chain Oiler Mixture 85

Lubrication & Maintenance Chart 86
Troubleshooting 88
- Spreader Module LED Light Alerts 90

Standard Torques 91
Pre- & Post-Season Checklists 92
Hydraulics 93
Controller Operations 103
- Introduction 103
- How the ISOBUS Works 103
- Terminologies 103
- Cab to Enclosure Diagram 104
- Modules to Function Diagram 105
- Requirements 106
- Navigation 107
- Navigation Control Buttons 108
- Machine Configuration 109
- Initial Configuration/Factory Setup 109
- Enable Installed Bins 110
- Bin Settings 110
- GPS Offsets 112
- System Setup Summary 112
- Configuring Auxiliary Switches 112
- Settings 113
- Enable/Disable Bins 113
- Valve Calibration Adjustment 113
- Alarm Settings 116
- Reconfigure System 116
- Switch Assignment 117
- Component Calibration 118
- Spinner Disc Calibration 118
- Calibrate Rate Encoder 119

Conveyor Calibration 121
Operations/Features 124
Feedgate Optimizer 127
Boundary Spreading 128
Hydraulics 131
Bin Flush 133
Body Module 135
Bin Cover Control 135
Chain Oiler 136
Bin Sequencing 138
General Alarms 140
General Product Control Alarms 141
Spinner Alarms 142
Hydraulic Alarms 143
Bin Sequencing Alarms 143
Chain Oiler Alarms 143
Default Settings 144
Calibration 145
Alarms 145
Spread Pattern 147
Catch Test 147
Spread Pattern 148
Spread Pattern Test Kit 148
Spinners 149
Spreader Preparation 149
Test Procedure 151
Test Results 153
Troubleshooting 154
Determining Driving Centers 155
Verifying Driving Centers 156

Interactive Features

NOTE:	This manual incorporates several interactive features to provide supplemental information and ease of navigation. The information below is to aid in the identification and use of these features.

Hyperlinks

Hyperlinks provide direct access to a specific destination when clicked. The entire Table of Contents of this manual is hyperlinked to provide quick access to all sections of this manual when viewing the electronic version.

Hyperlinks within the content are denoted by **blue, bold underlined text**. Electronic format viewers can click these links for direct access to New Leader online features. Internet access is required.

Insert Current New Leader Warranty

PLEASE ! ALWAYS THINK SAFETY FIRST !!

The purpose of this manual is to familiarize the person (or persons) using this unit with the information necessary to properly install, operate, and maintain this system. The safety instructions indicated by the safety alert symbol in the following pages supersede the general safety rules. These instructions cannot replace the following: the fundamental knowledge that must be possessed by the installer or operator, the knowledge of a qualified person, or the clear thinking necessary to install and operate this equipment. Since the life of any machine depends largely upon the care it is given, we require that this manual be read thoroughly and referred to frequently. If for any reason you do not understand the instructions, please call your authorized dealer or our Product Sales and Support Department at 1-888-363-8006.

It has been our experience that by following these installation instructions, and by observing the operation of the spreader, you will have sufficient understanding of the machine enabling you to troubleshoot and correct all normal problems that you may encounter. Again, we urge you to call your authorized dealer or our Product Sales and Support Department if you find the unit is not operating properly, or if you are having trouble with repairs, installation, or removal of this unit.

We urge you to protect your investment by using genuine NLM parts and our authorized dealers for all work other than routine care and adjustments.

New Leader Manufacturing reserves the right to make alterations or modifications to this equipment at any time. The manufacturer shall not be obligated to make such changes to machines already in the field.

This Safety Section should be read thoroughly and referred to frequently.

ACCIDENTS HURT !!!

ACCIDENTS COST !!!

ACCIDENTS CAN BE AVOIDED !!!

Important Safety Information

⚠WARNING

Before using this equipment, read, understand and follow all instructions in the Operator's Manual provided with this equipment. If the user and/or assistants cannot read or understand the warnings and instructions, the employer of the user and/or assistants must provide adequate and necessary training to ensure proper operation and compliance with all safety procedures pertaining to this equipment. If Operator's Manual has been lost, visit www.newleader.com or call your authorized dealer or our Product Sales & Support Department at (800) 363-1771 for replacements. Serious injury or death can result from the failure to read, understand, and follow instructions provided in this manual.

Figure 1.1 - The need for safety cannot be stressed strongly enough in this manual. At New Leader Manufacturing, we urge you to make safety your top priority when operating any equipment. We firmly advise that anyone allowed to operate this machine carefully read, learn and understand all messages and information in this manual and on machine's safety decals before operating machine, as well as familiarize themselves with the location and function of all machine controls.

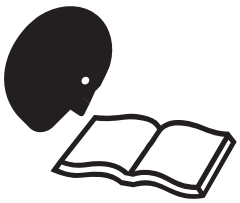

Figure 1.1

The following guidelines are intended to cover general usage and to assist you in avoiding accidents. There will be times when you will run into situations that are not covered in this section. At those times the best standard to use is common sense. If, at any time, you have a question concerning these guidelines, please call your authorized dealer or our Product Sales & Support Department at (800) 363-1771.

Safety Alert Symbols

Take note! This safety alert symbol found throughout this manual is used to call your attention to instructions involving your personal safety and that of others. Failure to follow these instructions can result in injury or death.

In this manual and on the safety signs placed on the unit, the words "DANGER," "WARNING," "CAUTION," and "NOTICE" are used to indicate the following:

⚠DANGER	DANGER indicates a hazardous situation which, if not avoided, will result in death or serious injury.
⚠WARNING	WARNING indicates a hazardous situation which, if not avoided, could result in death or serious injury.
⚠CAUTION	CAUTION indicates a hazardous situation which, if not avoided, could result in minor or moderate injury.
NOTICE	NOTICE is used to address practices not related to physical injury.
NOTE:	Provides additional information to simplify a procedure or clarify a process.

PREPARE FOR EMERGENCIES

Figure 1.2 - Be prepared if a fire starts. Keep a fully charged fire extinguisher and first aid kit in accessible place on the vehicle at all times.

Fire extinguisher must be Type ABC or Type BC.

Keep emergency numbers for doctors, ambulance service, hospital and fire department available at all times.

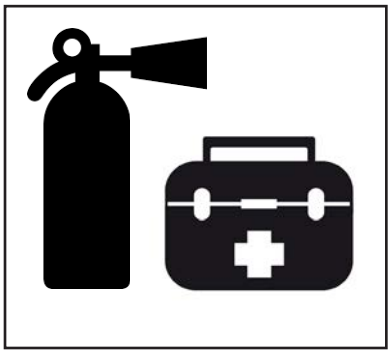

Figure 1.2

INSPECT HARDWARE BEFORE USE

Figure 1.3 - Inspect all bolts, screws, fasteners, keys, chain drives, body mounts and other attachments periodically. Immediately replace any missing or damaged parts with NLM specified parts.

Inspect spinner fins, spinner frame mounting and spinner fin hardware daily. Look for missing or loose fasteners, wear and cracks. Replace immediately with NLM specified parts.

Tighten all bolts, nuts and screws to specified torques. Refer to "Standard Torques" in Maintenance section of this manual.

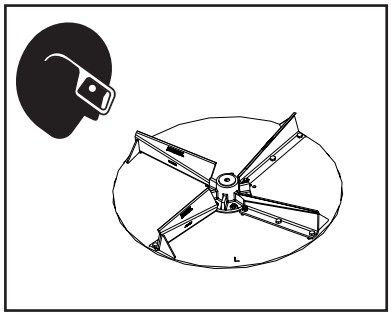

Figure 1.3

HANDLE FLAMMABLE MATERIALS SAFELY

Figure 1.4 - Handle fuel and hydraulic oil with care. They are highly flammable.

Exposure to toxic fluids or fumes may occur during the normal operation of this system. Before attempting to fill, use, or service this system, read Safety Data Sheets (SDS) to know the specific hazards of the fluids you are using. Always use proper Personal Protective Equipment when attempting to fill, use, or service this system.

Always stop engine before refueling machine or filling hydraulic reservoir.

Never smoke while adding fuel or oil to machine. Add fluids in a safe place away from open flame and sparks.

Do not allow overflow. Clean up spilled fuel and oil immediately.

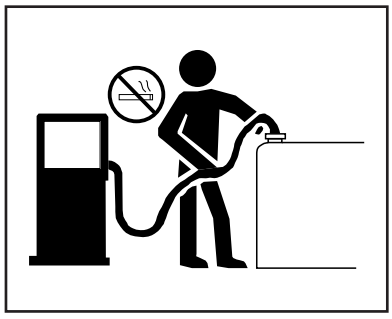

Figure 1.4

Always have a multipurpose dry chemical fire extinguisher filled and available during machine operation and when adding fuel. Know how to use it.

HANDLE HAZARDOUS MATERIALS SAFELY

Figure 1.5 - Materials to spread can be dangerous.

Figure 1.5

Improper selection, application, use or handling may be a hazard to persons, animals, plants, crops or other property.

A Safety Data Sheet (SDS) provides specific details on chemical products: physical and health hazards, safety procedures and emergency response techniques.

Check all SDS's before starting any job using a hazardous material. Follow all instructions and precautions given by the material manufacturer.

WORK IN WELL-VENTILATED AREAS

⚠WARNING

Never run machine engine inside a building unless adequate ventilation is provided to safely and properly remove exhaust fumes. Failure to comply with this requirement could result in death or serious injury.

Figure 1.6 - Always work in a properly ventilated area.

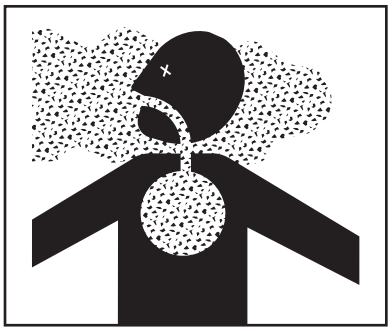

Figure 1.6

Engine exhaust fumes can cause sickness or death. If it is necessary to run an engine in an enclosed area, use proper equipment to safely remove exhaust fumes from the working area.

Open building doors and get fresh air into the working area whenever possible.

PROTECT AGAINST NOISE

Figure 1.7 - Long periods of exposure to high decibels or loud noise can cause hearing impairment or loss.

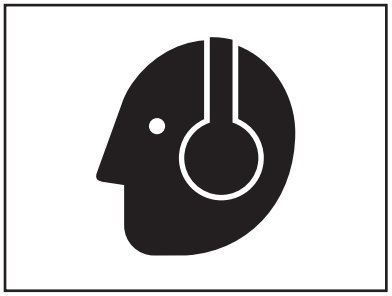

Figure 1.7

Wear proper hearing protection such as earmuffs or earplugs during periods of exposure to high decibels or loud noise.

AVOID MOVING PART HAZARDS

Figure 1.8 - Entanglement in rotating drive lines or moving parts will cause serious injury or death.

Stay clear of all moving parts, such as shafts, couplings and universal joints.

Make sure all personnel are clear of machine before starting.

Figure 1.8

Figure 1.9 - Do not operate machine without all guards and shields closed and secured.

Disconnect and lock out power source before removing guards.

Disconnect and lock out power source before adjusting or servicing.

Keep hands, feet, hair and clothing away from moving parts.

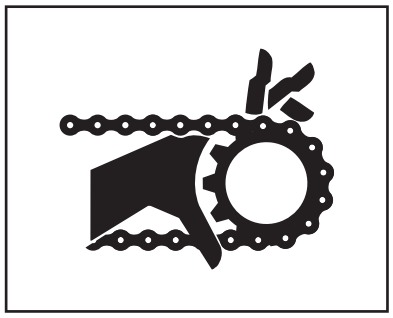

Figure 1.9

Figure 1.10 - Keep away from spinners while they are turning.

Rocks, scrap metal and other material can be thrown from the spinners violently. Stay away from discharge area.

Stop machine before servicing or adjusting. Wear eye protection.

Make sure discharge area is clear before spreading.

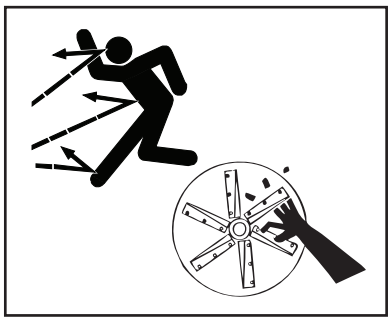

Figure 1.10

Figure 1.11 - Stay out of spreader.

If necessary to enter the spreader, return to shop, empty body, turn off all power, engage brakes, shut down engine and remove keys before entering.

Tag all controls to prohibit operation. Tags should be placed, and removed, by the person working in the body.

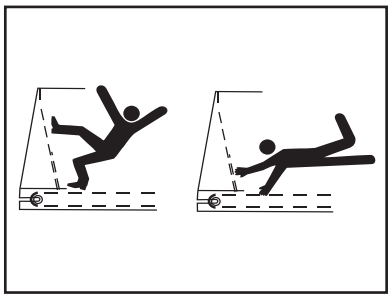

Figure 1.11

DO NOT CLIMB OR STAND ON MACHINE

Figure 1.12 - Never allow any personnel to ride in or on the machine.

Use inspection ladder or portable ladder to view the unit. Use caution when getting on and off the ladder, especially in wet, icy, snowy or muddy conditions. Clean mud, snow and ice from steps and footwear.

Always maintain three-point contact with steps, ladders and handholds. Face the machine when mounting and dismounting inspection ladder. Do not jump off machine.

Figure 1.12

OPERATE MACHINE SAFELY

Always walk around and visually inspect machine before using. Check the immediate vicinity of machine for people and obstructions. Ensure adequate visibility.

Avoid distractions such as reading, eating or operating personal electronics while operating machine. Never operate the machine under the influence of alcohol, drugs or while otherwise impaired.

Always come to a complete stop before reversing. Be sure that all personnel are clear of machine path. Turn around and look directly for best visibility. Ensure all rear view mirrors are properly installed and adjusted. Use a signal person when backing if view is obstructed or when in close quarters.

Always disengage hydraulics before shutting down engine. DO NOT start engine with hydraulics engaged.

TRAVELING & TRANSPORTING ON PUBLIC ROADS

Always walk around and visually inspect the machine before traveling on public roads. Check for damage and/or faulty components that can fail and create a hazard or unsafe condition. Make sure all machine systems operate properly, including but not limited to: headlights, tail and brake lights, hazard warning lights, turn indicators, parking brake, horn and rear view mirrors. Repair or replace any component that is not in proper working order.

Never drive machine at a speed that causes it to bounce or cause loss of control.

Obey all traffic safety laws and regulations. Operate the machine with hazard warning lights on, unless prohibited by law. It is the operator's responsibility to activate and use road lights properly while traveling on public roads.

Cover all loads that may spill or blow away. Environmental damage may result. Do not spread dusty materials where dust may create pollution, visibility issues or interfere with traffic on public roads.

When transporting equipment or machine on a trailer, ensure it is properly secured. Be sure that SMV signs on equipment or machine are covered while in transport on a trailer.

Be aware of overhead structures and power lines. Make sure machine can safely pass under. Refer to "Dimensions & Capacities" pages in the Operations section of this manual.

NAVIGATING ROUGH & UNEVEN TERRAIN

Figure 2.1 - Turn slowly and be careful when traveling on rough surfaces and side slopes. Avoid holes, ditches and obstructions that may cause machine to roll over, especially with a loaded spreader.

Never drive near the edge of a gully or steep embankment.

Load may shift, causing vehicle to tip.

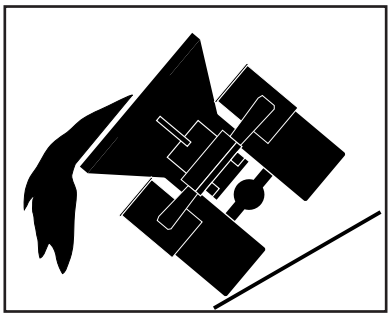

Figure 2.1

READ AND UNDERSTAND MAINTENANCE PROCEDURES

Figure 3.1 - Read the maintenance and safety instructions and understand them before performing any maintenance procedure.

Never perform any maintenance procedure or repair if the instructions and safety procedures are not fully understood. Only trained and qualified personnel should perform any maintenance procedure or repair.

Never modify any equipment or add attachments not approved by New Leader Manufacturing.

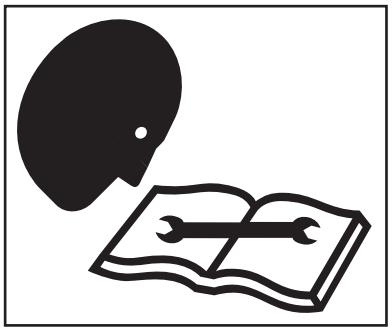

Figure 3.1

DO NOT SERVICE OR ADJUST MACHINE WHILE IN MOTION

Figure 3.2 - Never lubricate, service or adjust the machine or any of its components while they are moving.

Never wear loose clothing or jewelry when working near machine tools or moving parts.

Remove rings and other jewelry to prevent electrical shorts and other personal injury when in contact with machine tools or moving parts.

Close and secure all guards removed for service. Check all screws, bolts, nuts and fasteners for proper torques before operating machine.

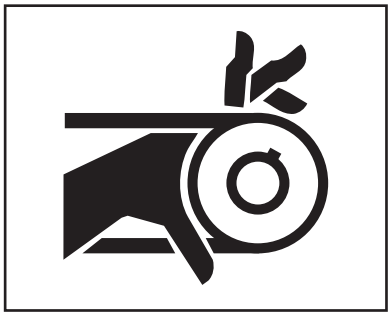

Figure 3.2

WEAR PROPER PROTECTIVE EQUIPMENT

Figure 3.3 - Wear close-fitting clothing and proper safety equipment for the job.

Always wear eye protection when working on or around the machine.

Wear a suitable hearing protection device such as earmuffs or earplugs to protect against high decibels or loud noises.

Prolonged exposure to high decibels or loud noise can cause hearing impairment or loss of hearing.

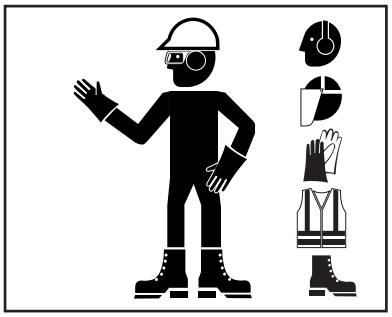

Figure 3.3

Wear protective gloves to protect hands from cuts, abrasions and minor burns.

HANDLE FLAMMABLE SOLVENTS SAFELY

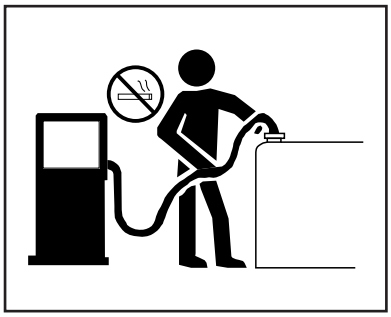

Figure 3.4

Figure 3.4 - Never use diesel fuel, kerosene, gasoline or any flammable solvents for cleaning.

Exposure to toxic fluids or fumes may occur during the normal operation of this system. Before attempting to fill, use, or service this system, read Safety Data Sheets (SDS) to know the specific hazards of the fluids you are using. Always use proper Personal Protective Equipment when attempting to fill, use, or service this system.

Perform work using flammable fluids and solvents in a safe place away from open flame and sparks. Do not smoke.

Do not weld, grind or flame cut on any tank containing oil, fuel, fumes or any other flammable material, or any container that contents or previous contents are unknown. Move all flammable materials and containers away from work area.

Clean up spilled fuel and oil immediately.

Always have a multipurpose dry chemical fire extinguisher filled and available. Know how to use it.

USE PROPER LIFTING EQUIPMENT

Figure 3.5

Figure 3.5 - Use only lifting devices that meet or exceed OSHA standard 1910.184 or ASME B30.20-2013.

Never lift equipment over people.

Never lift a loaded unit. Never lift unit with any loose objects or persons in the body. Loads may shift or fall if improperly supported, causing death, serious injury or machine damage.

Before unfastening heavy parts or assemblies, support with adequate hoist or other device to prevent falling, tipping, swinging or any other movement that may cause injury or damage.

USE PROPER TOOLS FOR THE JOB

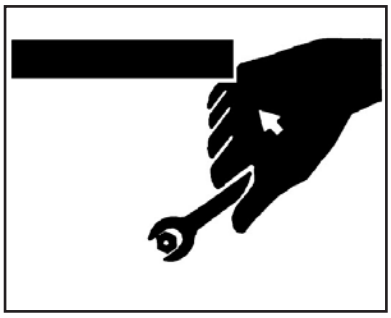

Figure 3.6

Figure 3.6 - Use of improper tools (such as a screwdriver instead of a pry bar, pliers instead of a wrench, a wrench instead of a hammer) can cause serious injuries or machine damage.

Use power tools only to loosen threaded parts and fasteners. Using power tools to tighten may cause over-tightening and component damage.

Use only service parts meeting New Leader specifications.

HIGH PRESSURE FLUID HAZARDS

Figure 3.7 - Escaping fluid under pressure can penetrate the skin causing serious injury.

Always stop machine, allow to cool and relieve pressure before servicing hydraulic system. Never open hydraulic lines under pressure. Make sure all connections are tight and all hoses are in good condition before pressurizing system.

Always use a piece of cardboard or wood to search for leaks instead of hand. Wear impervious gloves and eye protection when servicing system.

Seek medical attention immediately if fluid penetrates your skin. Gangrene may result if wound is left untreated.

Figure 3.7

AVOID HEATING NEAR HIGH PRESSURE FLUID LINES

Figure 3.8 - Flammable spray can be generated by heating near pressurized fluid lines, resulting in burns to yourself and bystanders.

Do not heat by welding, soldering or using a torch near pressurized fluid lines or other flammable materials.

Pressure lines can suddenly burst when heat goes beyond the immediate flame area.

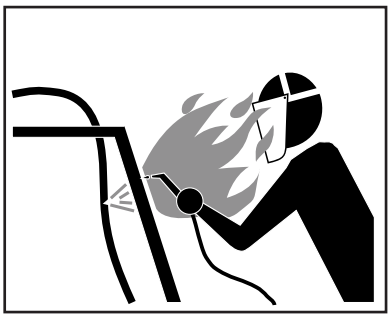

Figure 3.8

AVOID TOXIC FUMES & DUST

Figure 3.9 - Hazardous fumes can be generated when paint is heated from welding, soldering or using a torch.

Remove paint before heating:

- Remove a minimum of 4 in (100 mm) from area to be affected by heating. If paint cannot be removed, wear an approved respirator while heating or welding.
- Avoid breathing dust from sanding or grinding on paint.
- If a solvent or paint stripper is used, wash stripper away with soap and water before heating or welding. Remove solvent or paint stripper containers and other flammable material from area. Allow fumes to disperse for at least 15 minutes before heating or welding.

Do not use chlorinated solvents in areas where welding will take place.

Perform all work in a well-ventilated area that will carry all toxic fumes and dust away.

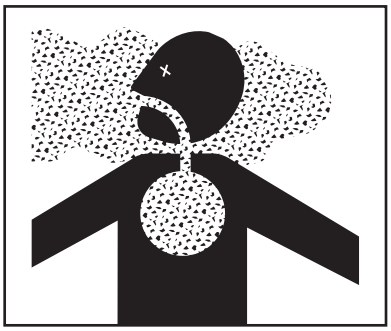

Figure 3.9

CLEAN MACHINE OF HAZARDOUS CHEMICALS

⚠CAUTION

During application of hazardous chemicals, residue can build up on the inside or outside of the vehicle. Clean vehicle according to use instructions of hazardous chemical. Failure to comply with this requirement may result in minor or moderate injury.

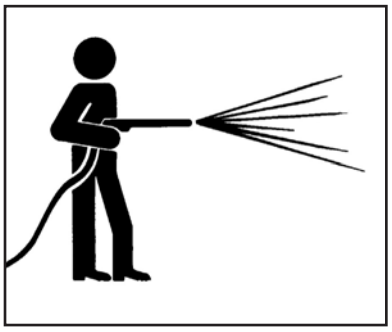

Figure 3.10

Figure 3.10 - When exposed to hazardous chemicals, clean exterior and interior of vehicle daily to keep free of the accumulation of visible dirt and contamination.

1. Clean operator's station to maintain unobstructed visibility of all windows and mirrors, and safe operation of all controls.

NOTICE

Directing pressurized water at electronic/ electrical components, bearings and hydraulic seals or other sensitive parts and components may cause product malfunctions. Reduce pressure and spray at 45 to 90 degree angles.

2. Wash entire exterior of vehicle.
3. Dispose of any wash water with hazardous concentrations of active or non-active ingredients according to published regulations or directives.

HANDLE BATTERIES SAFELY

⚠WARNING

Sulfuric acid in battery electrolyte is poisonous. It can burn skin, eat holes in clothing, and cause blindness if it contacts eyes. Keep sparks and flame away from batteries. Wear proper safety equipment. Failure to comply with this requirement could result in death or serious injury.

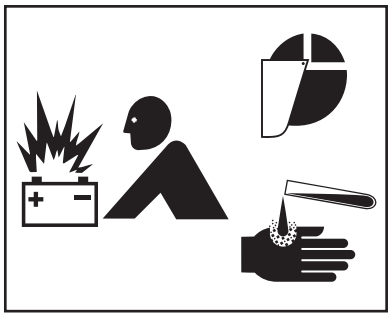

Figure 3.11

Figure 3.11 - Lead acid batteries generate flammable and explosive gases. Keep sparks and flame away from batteries. Do not smoke.

If acid contacts eyes, skin or clothing, flush with water immediately. Seek immediate medical attention if acid contacts eyes.

PROPER TIRE MAINTENANCE

Figure 3.12 - Never weld on a wheel or rim that has a tire on it.

Never attempt to mount or remove a tire unless using the proper equipment, tire safety cage, instructions, training, and you are qualified to perform the work safely. Failure to follow the correct procedures when mounting a tire on a wheel or rim can cause an explosion and serious injury.

Tire service procedures must be performed by trained and qualified personnel.

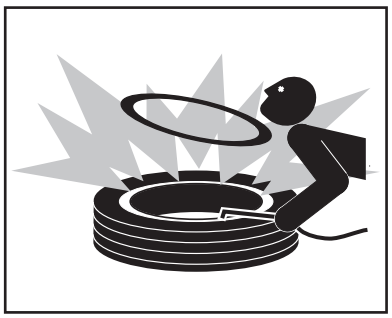

Figure 3.12

PARK VEHICLE SAFELY

Figure 4.1 - When leaving the vehicle unattended for any reason, be sure to:

- Shut down PTO.
- Shut off vehicle's engine, and unit's engine if applicable.
- Place vehicle transmission in "Neutral" or "Park".
- Set parking brake firmly.
- Remove ignition key and take it with you.
- Block wheels.

These actions are recommended to avoid unauthorized use, runaway, vandalism, theft and unexpected operation during startup.

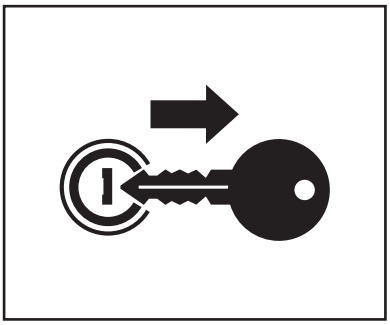

Figure 4.1

SUPPORT MACHINE PROPERLY

Figure 4.2 - When machine is removed from vehicle, always store on adequate supports on a firm level surface. Improper supporting or storage of spreader may cause machine to fall, resulting in serious injury or death.

Never use lifting device to free machine from a chassis, storage stands or frozen ground, or to lift the chassis in any way. Shock loading is prohibited and sudden accelerations must be avoided. Lifting in such a manner could result in injury or machine damage.

Figure 4.2

DISPOSE OF WASTE PROPERLY

Figure 4.3 - Improper disposal of waste can threaten the environment and ecology. Potentially harmful waste used with equipment include items such as fuel, oil, filters and batteries.

Use leakproof containers when draining fluids. Do not use food or beverage containers that may mislead someone into drinking from them. Do not pour waste onto the ground, down a drain, or into any water source.

Comply with all OSHA, local, City, State, Province, Country and jurisdiction regulations, ordinances and standards, related to your particular work area and environment. Inquire on proper disposal methods from your local environmental or recycling center, or from your local dealer.

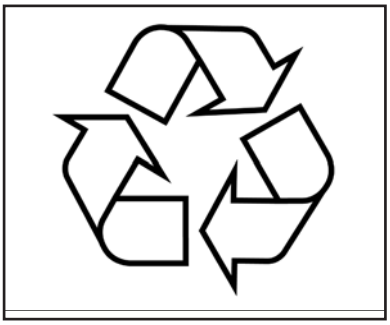

Figure 4.3

Safety Decal Maintenance

Keep safety decals and signs clean and legible at all times.

Replace safety decals and signs that are missing or have become illegible.

Replaced parts that displayed a safety sign should also display the current sign.

Safety decals or signs are available from your dealer's Parts Department or from New Leader Manufacturing by calling (800) 363-1771.

Safety Decal Installation

Clean Surface

Wash the installation surface with a synthetic, free-rinsing detergent. Avoid washing the surface with a soap containing creams or lotion. Allow to dry.

Position Safety Decal

Decide on the exact position before application. Application marks may be made on the top or side edge of the substrate with a lead pencil, marking pen, or small pieces of masking tape. NOTE: Do not use chalk line, china marker, or grease pencil. Safety decals will not adhere to these.

Remove the Liner

A small bend at the corner or edge will cause the liner to separate from the decal. Pull the liner away in a continuous motion at a 180-degree angle. If the liner is scored, bend at score and remove.

Apply Safety Decal

Tack decal in place with thumb pressure in upper corners. Using firm initial squeegee pressure, begin at the center of the decal and work outward in all directions with overlapping strokes. NOTE: Keep squeegee blade even—nicked edges will leave application bubbles. Pull up tack points before squeegeeing over them to avoid wrinkles.

Remove Pre-mask

If safety decal has a pre-mask cover remove it at this time by pulling it away from the decal at a 180 degree angle. NOTE: It is important that the pre-mask covering is removed before the decal is exposed to sunlight to avoid the pre-mask from permanently adhering to the decal.

Remove Air Pockets

Inspect the decal in the flat areas for bubbles. To eliminate the bubbles, puncture the decal at one end of the bubble with a pin (never a razor blade) and press out entrapped air with thumb moving toward the puncture.

Re-Squeegee All Edges

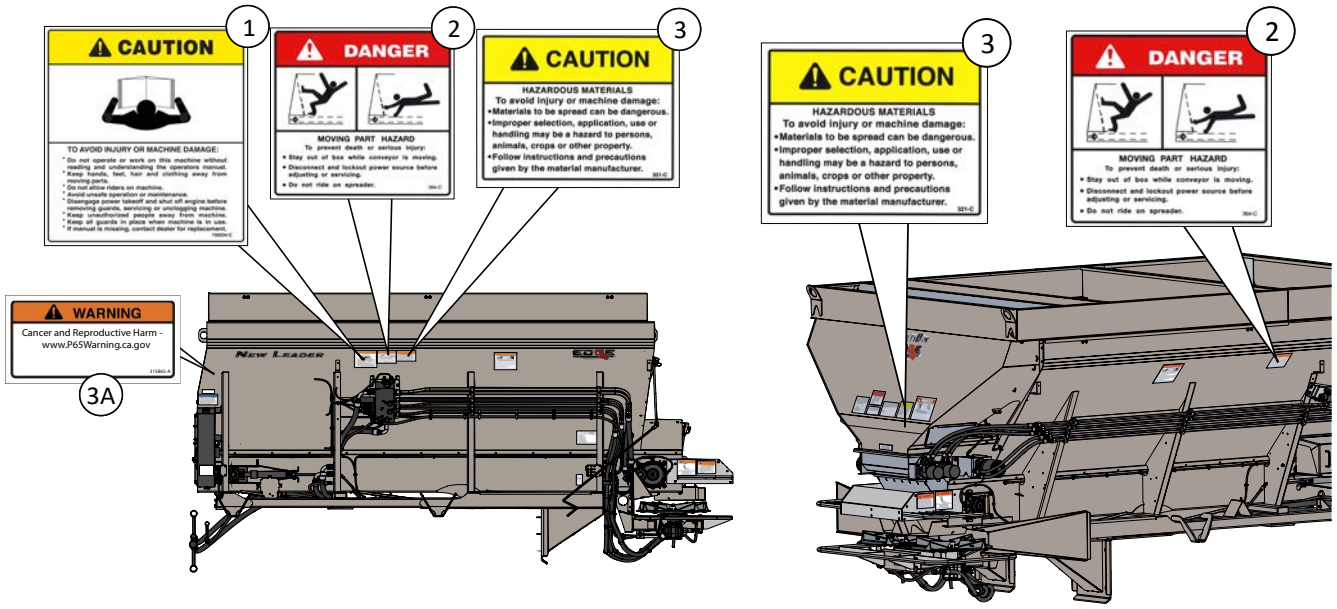

1. CAUTION: TO AVOID INJURY OR MACHINE DAMAGE:

- Do not operate or work on this machine without reading and understanding the operator's manual.
- Keep hands, feet, hair and clothing away from moving parts.
- Do not allow riders on machine.
- Avoid unsafe operation or maintenance.
- Disengage power takeoff and shut off engine before removing guards, servicing or unclogging machine.
- Keep unauthorized people away from machine.
- Keep all guards in place when machine is in use.
- If manual is missing, contact dealer for replacement.

2. DANGER: MOVING PART HAZARD

To prevent death or serious injury:

- Stay out of box while conveyor is moving.
- Disconnect and lockout power source before adjusting or servicing.
- Do not ride on the spreader.

3. CAUTION: HAZARDOUS MATERIALS

To avoid injury or machine damage:

- Materials to be spread can be dangerous.
- Improper selection, application, use or handling may be a hazard to persons, animals, crops or other property.
- Follow instructions and precautions given by the material manufacturer.

3A. WARNING: HAZARDOUS MATERIALS

To avoid injury:

- Cancer and Reproductive Harm - www.P65Warning.ca.gov

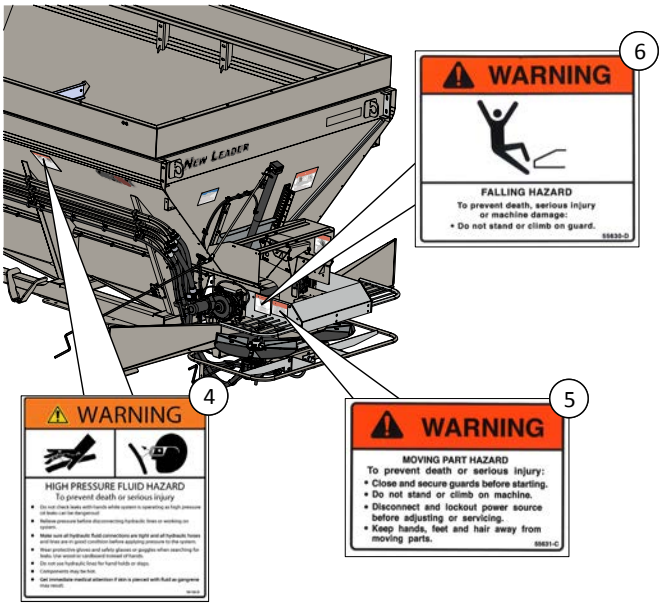

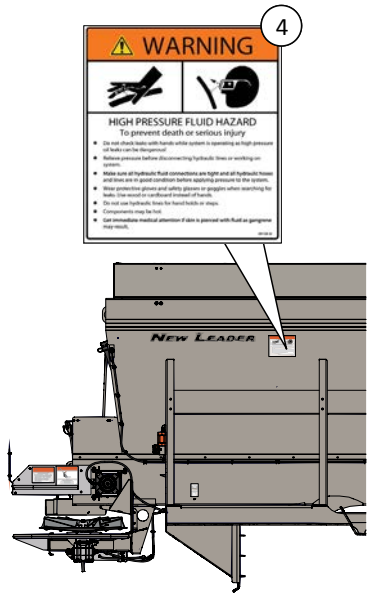

4. WARNING: HIGH-PRESSURE FLUID HAZARD

To prevent death or serious injury:

- Do not check leaks with hands while system is operating as high pressure oil leaks can be dangerous!
- Relieve pressure before disconnecting hydraulic lines or working on system.
- Make sure all hydraulic fluid connections are tight and all hydraulic hoses and lines are in good condition before applying pressure to the system.
- Wear protective gloves and safety glasses or goggles when searching for leaks. Use wood or cardboard instead of hands.
- Do not use hydraulic lines for hand holds or steps.
- Components may be hot.
- Get immediate medical attention if skin is pierced with fluid as gangrene may result.

5. WARNING: MOVING PART HAZARD

To prevent death or serious injury:

- Close and secure guards before starting.
- Do not stand or climb on machine.
- Disconnect and lockout power source before adjusting or servicing.
- Keep hands, feet and hair away from moving parts.

6. WARNING: FALLING HAZARD

To prevent death, serious injury or machine damage:

- Do not stand or climb on guard.

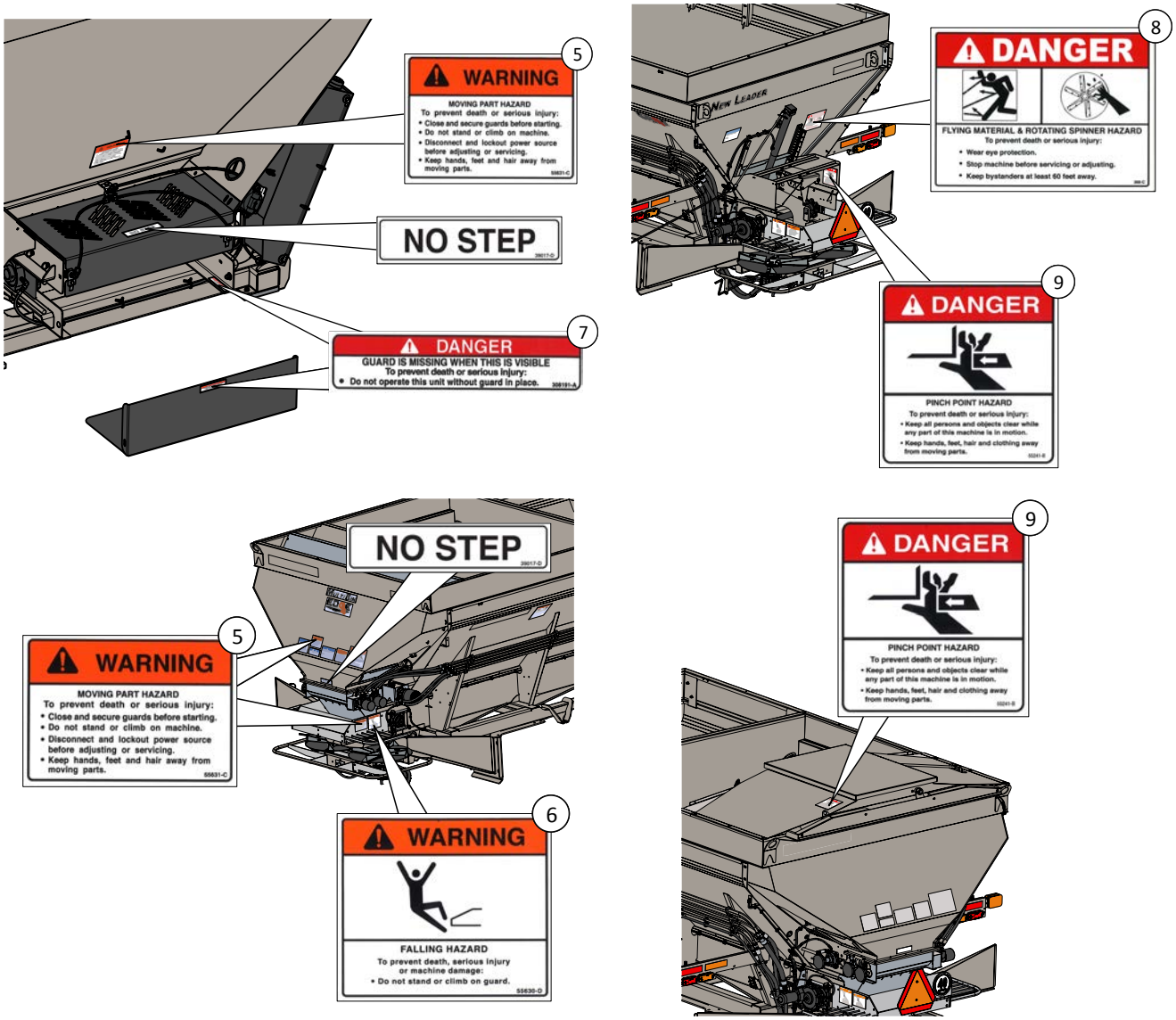

7. DANGER: GUARD IS MISSING WHEN THIS IS VISIBLE

To prevent death or serious injury:

- Do not operate this unit without guard in place.

8. DANGER: FLYING MATERIAL AND ROTATING SPINNER HAZARD

To prevent death or serious injury:

- Wear eye protection.
- Stop machine before servicing or adjusting.
- Keep bystanders at least 60 feet away.

9. DANGER: PINCH POINT HAZARD

To prevent death or serious injury:

- Keep all persons and objects clear while any part of this machine is in motion.
- Keep hands, feet, hair and clothing away from moving parts.

Informational Decals

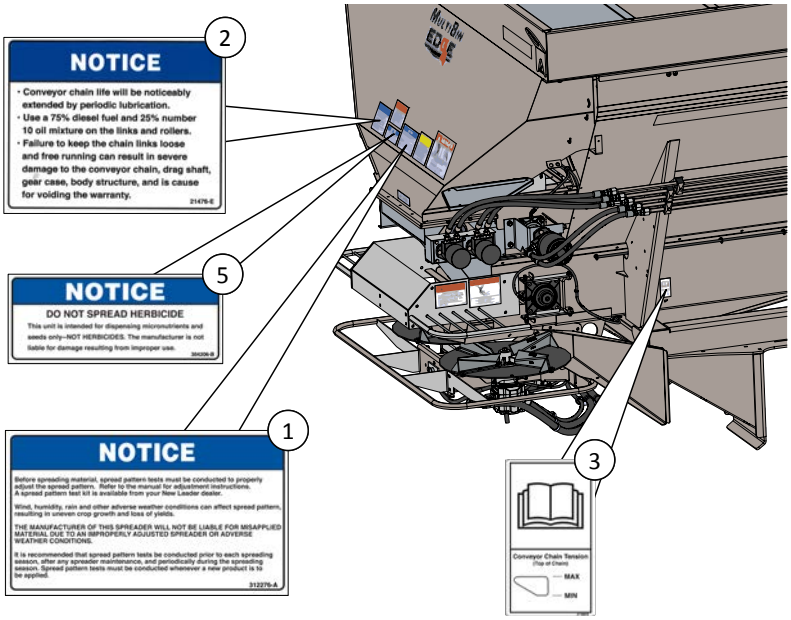

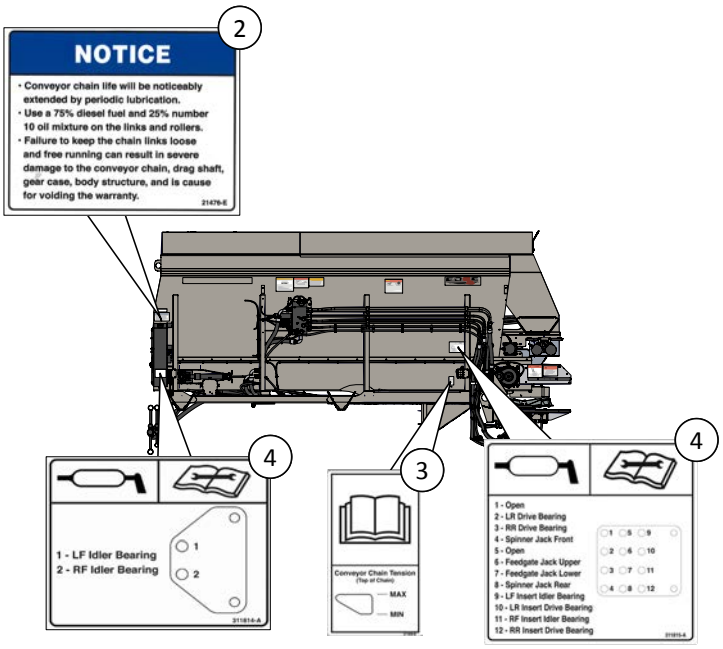

Informational Decals

1. NOTICE: SPREAD PATTERN TESTING

To obtain optimal machine performance:

Before spreading material, spread pattern tests must be conducted to properly adjust the spread pattern. Refer to the manual for adjustment instructions. A spread pattern test kit is available from your New Leader dealer.

Wind, humidity, rain and other adverse weather conditions can affect spread pattern, resulting in uneven crop growth and loss of yields.

THE MANUFACTURER OF THIS SPREADER WILL NOT BE LIABLE FOR MISAPPLIED MATERIAL DUE TO AN IMPROPERLY ADJUSTED SPREADER OR ADVERSE WEATHER CONDITIONS.

It is recommended that spread pattern tests be conducted prior to each spreading season, after any spreader maintenance, and periodically during the spreading season. Spread pattern tests must be conducted whenever a new product is to be applied.

2. NOTICE: CONVEYOR CHAIN LUBRICATION

To avoid machine damage and premature wear:

- Conveyor chain life will be noticeably extended by periodic lubrication.
- Use a 75% diesel fuel and 25% number 10 oil mixture on the links and rollers.
- Failure to keep the chain links loose and free running can result in severe damage to the conveyor chain, drag shaft, gear case, body structure, and is cause for voiding the warranty.

3. NOTICE: CONVEYOR CHAIN TENSION

To avoid machine damage and premature deterioration:

- Periodically inspect conveyor chain tension to ensure proper tension is maintained.
- See “Lubrication & Maintenance” section of this manual for details.

4. NOTICE: MACHINE LUBRICATION

To avoid machine damage and premature deterioration:

- Periodically lubricate the machine components at the front and rear remote grease banks.
- See “Lubrication & Maintenance Chart” in this manual for details.

5. NOTICE: DO NOT SPREAD HERBICIDE

To avoid machine damage:

- This unit is intended for dispensing micronutrients and seeds only--NOT HERBICIDES.
- The manufacturer is not liable for damage resulting in proper use.

Recommended sequence of installation is:
Mounting of PTO and pump.
Installation of radar (if applicable)
Mounting of spreader.
Installation of controller.
Installation of chassis hydraulic hose and electrical wiring to spreader.
Installation of optional parts.
Filling of hydraulic reservoir and lubrication.
Checking for leaks and proper functioning.

NOTICE Pump and truck requirements must be determined prior to installation of the spreader.

Hydraulic Requirements

Hydraulics		GPM (LPM) (Gallons/Liters per Minute)	Maximum Pressure (PSI)
NL4500G4	Spinner & Conveyor	40 (151.4)	3100
	MULTAPPLIER	9 (34.1)	1500
NL4500G4 HP	Spinner	40 (151.4)	3100
	Conveyor/MULTAPPLIER	20 (75.7)	3400

HECO Pump Part Numbers	Pump CID	Theoretical Pump GPM (LPM) 100% Efficiency	Pump RPM
86665	4.38	40 (151.4)	2100

Truck Requirements

Before mounting the spreader on a truck, the following major questions must be considered:

1. Is the CA (Cab to Axle) dimension of the truck correct for the length of the spreader?

The Dimensions and Capacities chart in the operator's manual will assist in matching spreader to truck.

2. Is the truck's GAWR (Gross Axle Weight Rating) and the GVWR (Gross Vehicle Weight Rating) adequate to carry the fully loaded spreader?

Refer to your New Leader dealer to find the GAWR and GVWR for most trucks, and how to calculate the weight distribution on each axle and total loaded vehicle weight.

Truck Frame Length

Refer to "Dimensions & Capacities" section in the operator's manual for approximate length from the rear of the cab to the rear end of the frame. Shorten truck frame as necessary, making sure to follow truck manufacturer's specifications so as not to void truck warranty.

NOTICE!	Do not weld to truck frame; it may void truck warranty.

A level top surface is necessary for mounting. Add steel shim bars or strips the same thickness as fish plates or other obstructions and as wide as the truck frame channel top flange. Shims must be drilled to clear any rivet or bolt heads.

Controller Requirements

The NL4500G4 Edge is equipped with an ISO 11783 compatible control system and will connect to any ISO 11783 compliant virtual terminal with a task controller that supports multi-channel dry granular applicators.

Lifting the Spreader

⚠WARNING	Use only lifting devices that meet or exceed OSHA standard 1910.184 or ASME B30.20-2006. Never lift equipment over people. Never lift unit with anything or anybody in the body. Loads may shift or fall if improperly supported. Failure to comply with this requirement could result in death or serious injury.

⚠CAUTION	Do not use lifting device to free unit from a chassis, storage stands or frozen ground, or to lift the chassis in any way. Shock loading is prohibited and sudden accelerations should be avoided. Failure to follow this requirement may result in injury or machine damage.

Always inspect unit lift points for signs of wear, cracking, corrosion, gouges, alterations, or distortion.

Always use a sling, spreader bar, or lifting bar that attaches to the lifting points with a minimum of 60 degrees from horizontal. It is preferable to use an "H" style lifting bar that keeps the attaching chains in a near vertical orientation as shown in Figure 1. Operators of lifting devices must be qualified and knowledgeable in their use and application.

Position the chassis with adequate room around the unit. Work in an environment that permits clear communication to others nearby. Keep area clear of persons when loads are to be lifted and suspended. Do not allow the lifted load to come in contact with any obstruction.

Store units on a solid surface using appropriate storage stands when not installed.

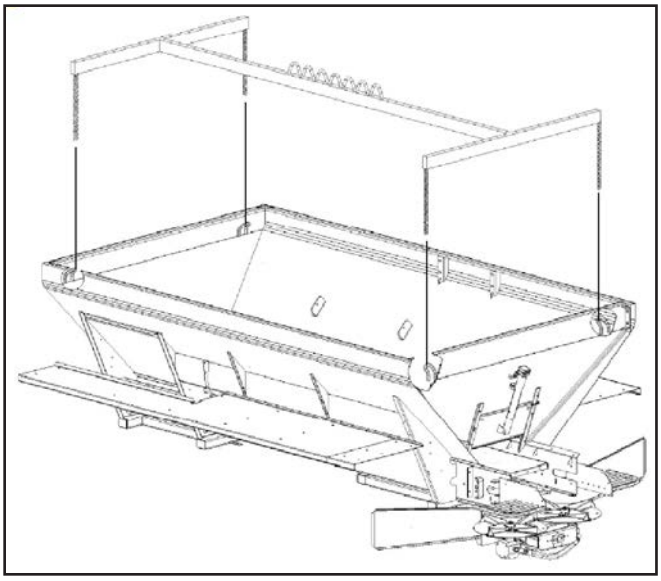

Figure 1 - Lifting Bar

Installing Body

⚠CAUTION	Be careful when drilling so as to not damage truck frame, fuel tank, or any other important components.

NOTICE	DO NOT WELD ON VEHICLE FRAME! Such welding can lead to fatigue cracking and must be avoided.

NOTICE	DO NOT PUT HOLES INTO TOP OR BOTTOM FLANGES—to do so may void truck manufacturer's warranty. When drilling holes in frame member, drill only through vertical web portions.

NOTICE	Connect welders ground directly to one of the items being welded anytime an arc welder is used on the vehicle or anything connected to the vehicle. Refer to Manufacturer's instructions.

IMPORTANT!	Disconnect electrical components from electrical system when welding on equipment to prevent component damage due to power surges or excessive current.

Front Mount Angles

Assemble two front mounting angle springs and hardware. Use a 3/8" (10mm) shim between cross tube mounting plate and truck frame mounting angle. Position assembly under second cross tube from front and against truck frame, make sure springs do not contact cross tube. Mark position of mounting angle holes on truck frame. Drill 9/16" (14mm) holes where marked and install mounting assembly using 1/2" hardware supplied. Weld mounting plate to bottom of cross tube on three sides, and remove 3/8" (10mm) shim (Figure 2). Tighten spring assembly until spring compressed height is 4" (102cm). There should be a 3/8" (10mm) space between cross tube mounting plate and truck frame mounting angle (Figure 2). Repeat this procedure on other side of truck frame, on same cross tube.

NOTE: It may be necessary to mount front mounting angle springs on first cross tube on some vehicles due to obstructions such as spring shackles, etc.

Center Mount Plates

Position center mounting plates at second cross tube from rear with slotted faces against truck frame and mark location of slots on truck frame. Drill 9/16" (14mm) diameter holes through truck frame, approximately (19mm) from bottom of slots (Figure 2). Weld mounting angle to bottom of cross tube on 3 sides (Figure 4). Install hardware and tighten to recommended torque.

Rear Mount Angles

Position rear mounting angles with the slotted faces against the side of the truck frame and centered on rear cross sill. Mark slot locations on truck frame. Drill 9/16" (14mm) diameter holes through truck frame at bottom end of slots (Figure 3). Weld mounting angle to bottom of cross tube on three sides (Figure 4). Install hardware and tighten to recommended torque.

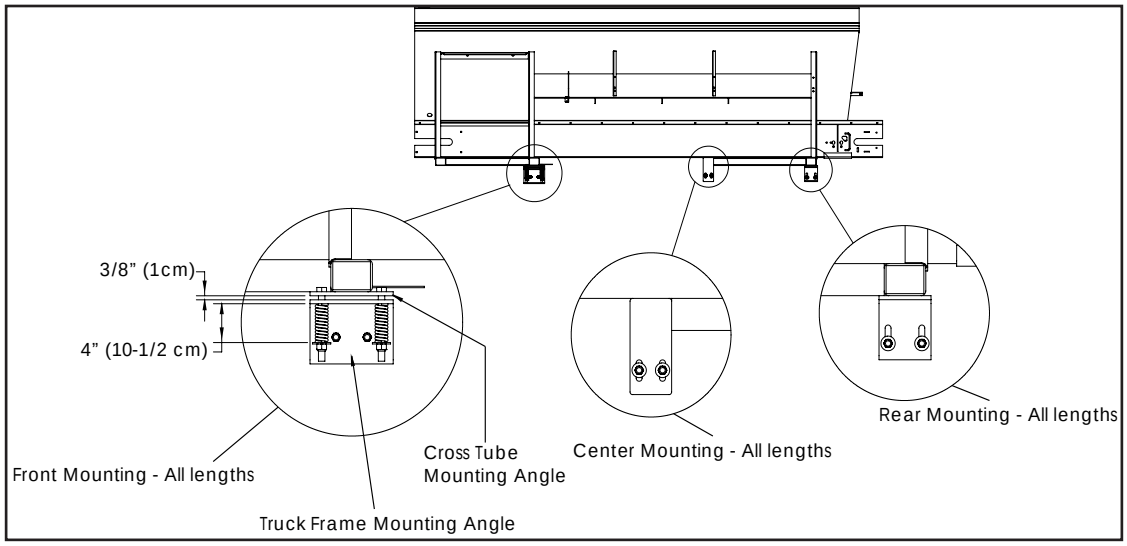

Figure 2 - Mounting Angle Installation - NL4500G4 Edge

Securing to Frame

Install mounting angles and tighten mounting bolts to recommended torque. Weld mounting angles to spreader cross tubes by welding on front, outer and rear sides (Figure 3). Make sure welds between mounting angles and spreader cross tubes are sound full fillet welds. Center mounting angles on tubes (as shown in Figure 3) so full fillet welds can be made on three sides. An edge bead weld is not a satisfactory weld for this service. Use E70S rod/wire for carbon steel to carbon steel and 309 rod/wire for carbon steel to stainless steel. Use 309 rod/wire to weld stainless steel to stainless steel.

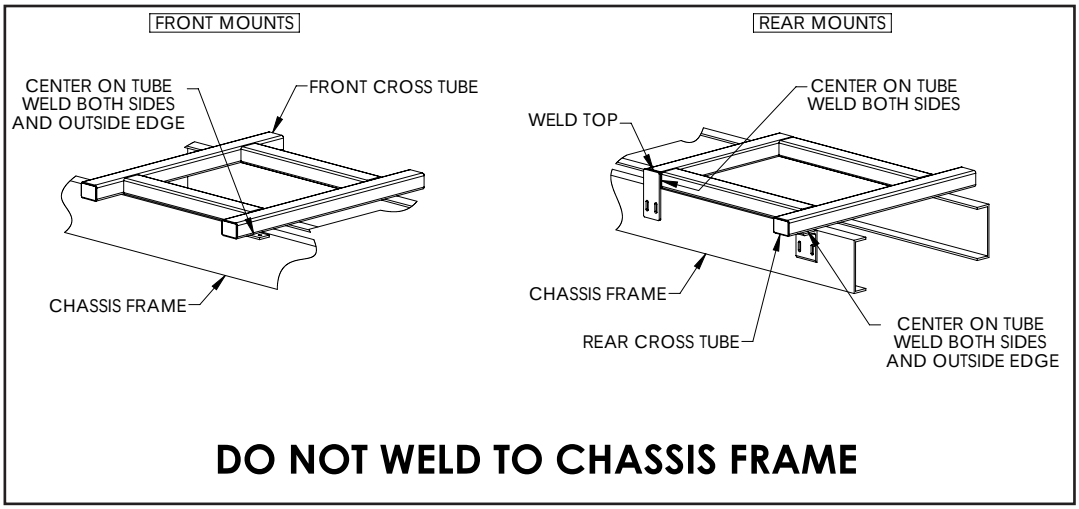

Figure 3 - Welding Instructions

Fender Installation

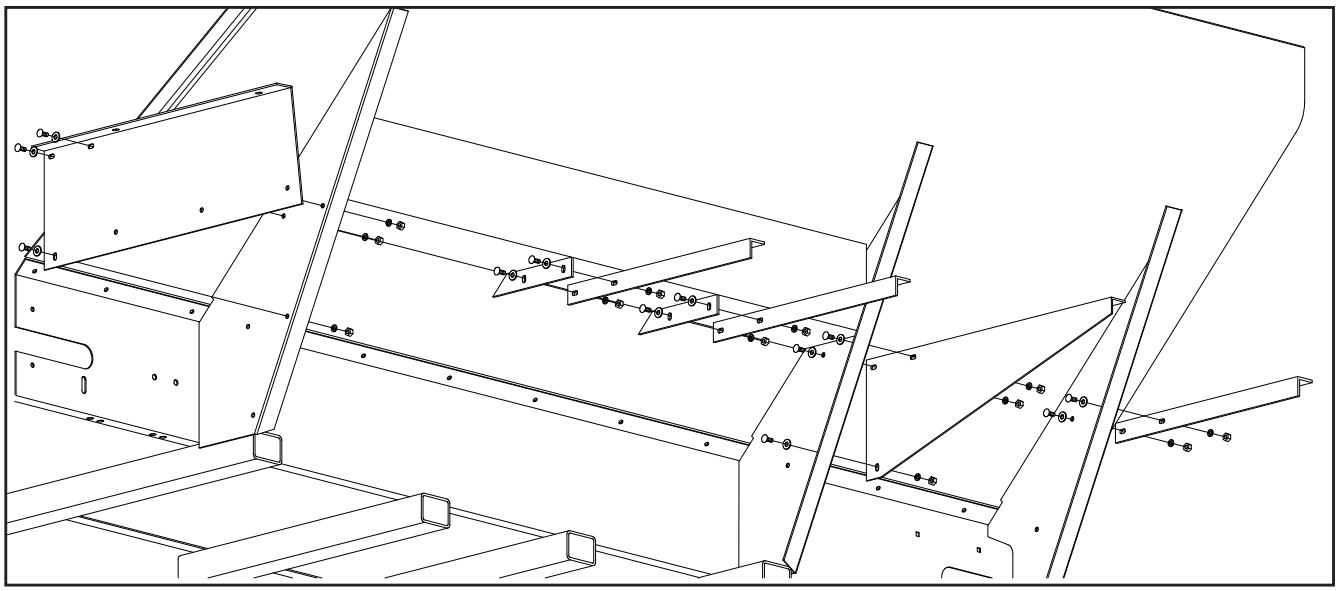

*Figure 4 - Fender Angle Installation

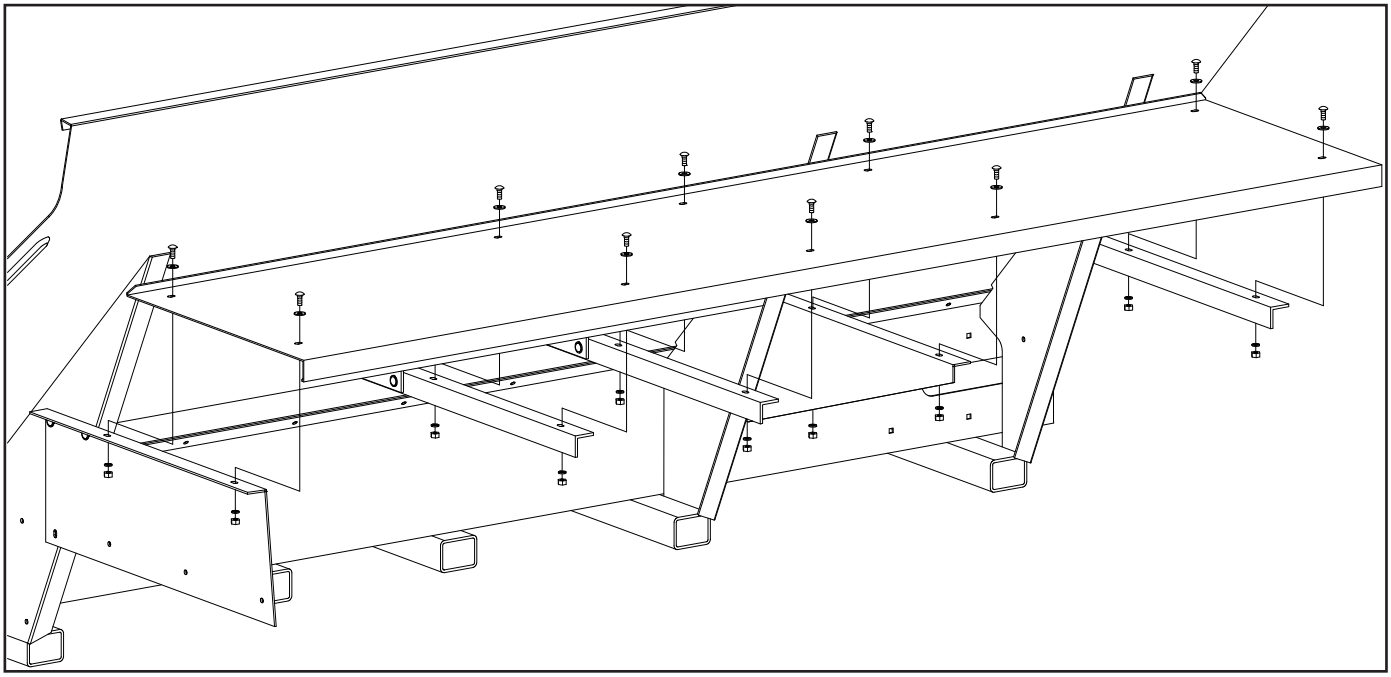

*Figure 5 - Fender Installation

* - Fenders may not be as shown

Attach fender angles and panels on spreader body stakes as shown in Figure 4. Do not tighten hardware at this time.

Attach fenders on top of angles/panels as shown in Figure 5. Tighten all hardware.

Side Board Installation

NOTICE Sideboards are for use with fertilizer only.

See "Side Boards" parts list in the parts manual for availability and illustrations.

Light Installation

⚠WARNING All holes in truck cab walls, floor and firewall are to be grommeted, plugged and sealed to prevent entrance of engine fumes, dust, dirt, water and noise. Failure to comply with this requirement could result in death or serious injury.

Light installation must comply with all applicable requirements prescribed by FMVSS/CMVSS 108, ASABE S279, state and local regulations. See "Lights" parts page in the operator's manual for illustrations if applicable.

Hydraulic Hose Installation

⚠CAUTION Do not overtighten a threaded connection, the fitting or housing into which the fitting is placed could be distorted and an unstoppable leak could occur. Failure to follow this requirement may result in injury or machine damage.

⚠WARNING Do not use one manufacturer's hose with another manufacturer's fittings! Such will void any warranty and may cause premature burst or leak of hydraulic fluids! Failure to comply with this requirement could result in death or serious injury.

Determine pressure port of pump. Install pressure hose into this port as shown in Figure 7. Connect suction hose to opposite port and to tank outlet on hydraulic tank. Use plastic tie straps as necessary to support hoses so they will not catch on field obstructions or contact hot or moving parts.

Hydraulic Pump Installation

HECO pumps are direct mount. See "Pump Hydraulics" in the spreader parts manual for assembly instructions.

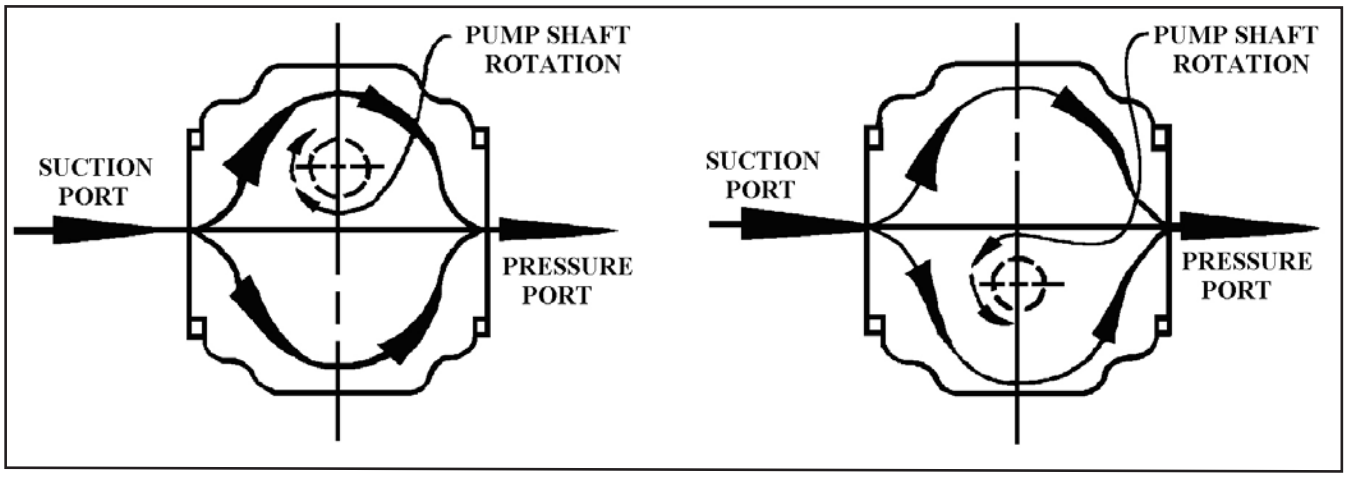

Figure 7 - Hydraulic Pump Installation

Use thread sealer on all NPT fittings. When using thread sealer, do not put it on the first three threads of the fitting. Too much on the fitting or on the first three threads will force it into the oil stream where it could damage the system.

Assemble system as shown in "Hydraulics" parts list in the parts manual. Place hose clamps as needed to keep hoses away from hot or moving parts. Do not let hoses hang so low as to be snagged. Do not stretch hoses tight.

Hydraulic hoses are as follows:

- Pressure Line: High pressure hose supplied by dealer. Hose must have minimum pressure rating that corresponds to the maximum pressure setting of the hydraulic system. Refer to "Hydraulic Requirements" on page 19.
- Suction Line: Suction hose supplied by dealer. Hose must meet or exceed SAE 100R4 requirements.

Hydraulic Hose Installation Guide

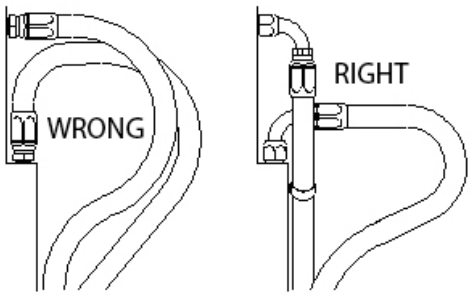

1. Use elbows and adapters in the installation to relieve strain on the assembly, and to provide easier and neater installations that are accessible for inspection and maintenance. Remember that metal end fittings cannot be considered as part of the flexible portion of the assembly.

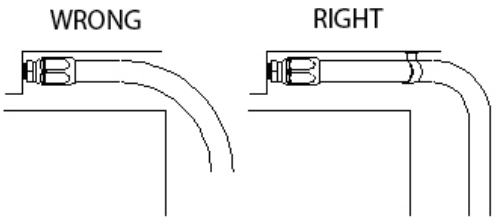

2. Install hose runs to avoid rubbing or abrasion. Clamps are often needed to support long runs of hose or to keep hose away from moving parts. It is important that the clamps be of the correct size. A clamp that is too large will allow the hose to move in the clamp causing abrasion at this point.

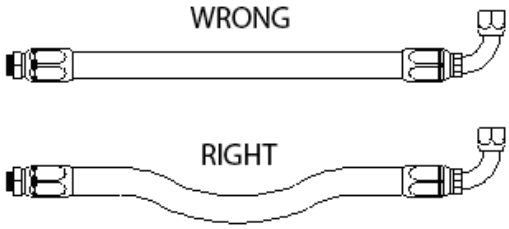

3. In straight hose installations allow enough slack in the hose line to provide for changes in length that will occur when pressure is applied. This change in length can be from +2% to -4%.

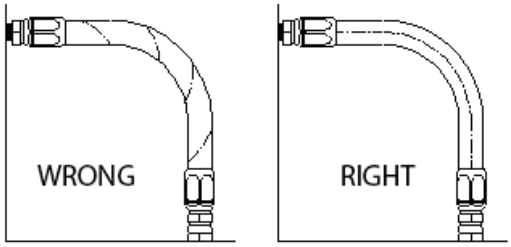

4. Do not twist hose during installation. This can be determined by the printed layline on the hose. Pressure applied to a twisted hose can cause hose failure or loosening of the connections.

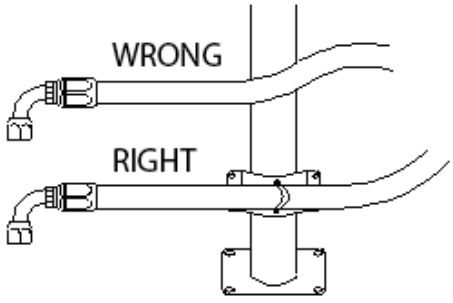

5. Keep hose away from hot parts. High ambient temperature will shorten hose life. If you cannot route it away from the heat source, insulate it.

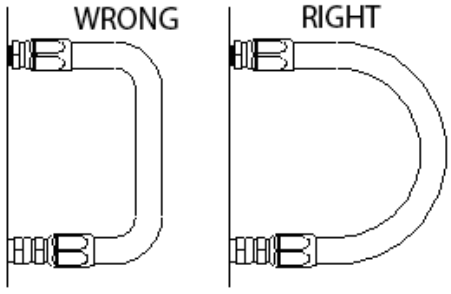

6. Keep the bend radii of the hose as large as possible to avoid hose collapsing and restriction of flow. Follow catalog specs on minimum bend radii.

(Used with the permission of The Weatherhead Company.)

Filling Hydraulic System

NOTICE DO NOT attempt to run pump without first filling hydraulic reservoir and opening suction line valve, or damage to pump may occur.

Fill reservoir with hydraulic oil as specified in the "Lubrication and Maintenance" section in the operator's manual. Be sure oil is clean, free from dirt, water and other contaminants.

Lubricate all points necessary per Lubrication Chart in "Lubrication and Maintenance" section of operator's manual.

Electrical Connections

Connect all electrical control circuits. All wiring should be approved automotive insulated wire, supported adequately with insulating ties or straps, and located where it will not interfere with any control or access. Make sure wiring does not contact any moving parts or sharp edge and is kept away from any hydraulic

ISOBUS Connections

A: Factory Supplied CAN-ISO Connector - Deutsch part no. HDP24-24-91PN-P064
Connects to: Mating Connector - Deutsch part no. HDP26-24-91SN (Not supplied)

- Pin 1 - Battery Ground
- Pin 2 - ECU Return (ECU Ground)
- Pin 3 - 60-amp fused power
- Pin 4 - ECU Power (Switched 12v)
- Pin 5 - N/C
- Pin 6 - TBC Power
- Pin 7 - TBC Return
- Pin 8 - ISO-BUS Can High
- Pin 9 - ISO-BUS Can Low

60-amp power on pin 3 needs to be fused at battery

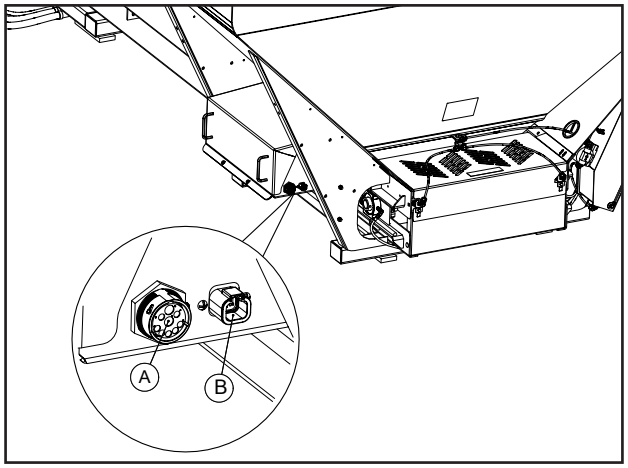

Figure 8

B: Factory Supplied Power Connector - Deutsch part no. DTP04-4P-L012
Connects to: Mating Connector - Deutsch part no. DTP06-4S (Not supplied)

- Pin 1 - Hydraulic cooler fan power (Switched 12V)
- Pin 2 - Hydraulic cooler fan ground
- Pin 3 - Body and lighting module ground
- Pin 4 - Body and lighting module power (Battery 12V)

30-amp power on pins 1 & 3 must be fused at battery.

Insert Installation

_Recommended sequence of installation is:
1. Spreader preparation.
2. Insert preparation.
3. Mounting of insert.
4. Connecting hydraulic hoses.
5. Installation of hillside divider and conveyor cover.
6. Checking installation.
7. Checking for leaks and proper functioning.

Spreader Preparation

⚠WARNING Use only lifting devices that meet or exceed OSHA standard 1910.184. Never exceed work load limits or lift equipment over people. Empty spreader before lifting. Loads may shift or fall if improperly supported. Failure to comply with this requirement could result in death or serious injury.

1. Figure 1A - Remove Hardware (1) and Inverted "V" (2).
2. Remove Hardware (3) and Hillside Divider (4).
3. Replace chain shield hardware (3) from Hillside Divider and torque to specification.
4. Remove Hardware (5) and Side Boards (6) from the spreader, if so equipped, and set hardware aside. Replace chain shield hardware (3) from Hillside Divider and torque to specification.

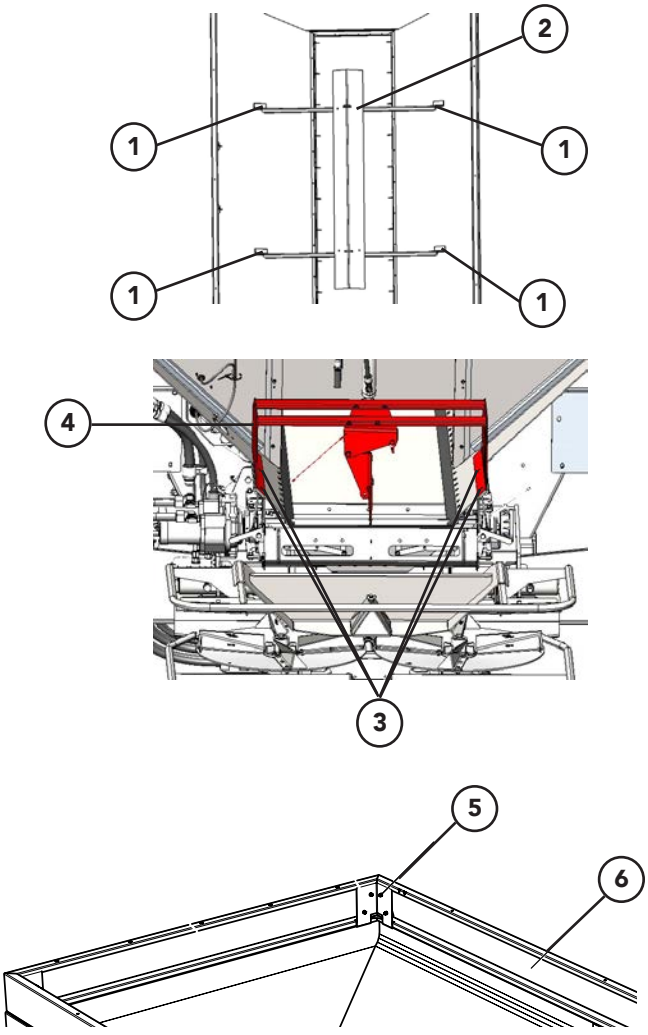

Figure 1

5. Figure 2 - Remove the Grease Lines (7) from Bracket (8).
6. Figure 3 - Support endgate by attaching a hoist to the lift hooks. Remove hardware (9) from both sides of the endgate and carefully remove from the spreader.

NOTE: Always use a sling, spreader bar, or lifting bar that attaches to the lifting points with a minimum of 60 degrees from horizontal. It is preferable to use a straight style lifting bar that keeps the attaching chains in a near vertical orientation.

NOTE: Always inspect unit lift hooks for signs of wear, cracking, corrosion, gouges, alterations, or distortion before use.

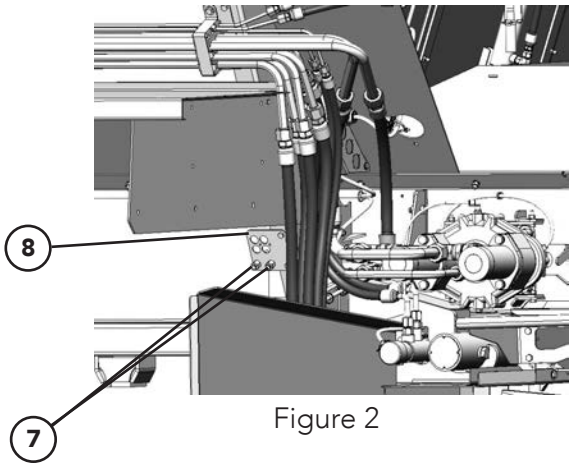

Figure 2

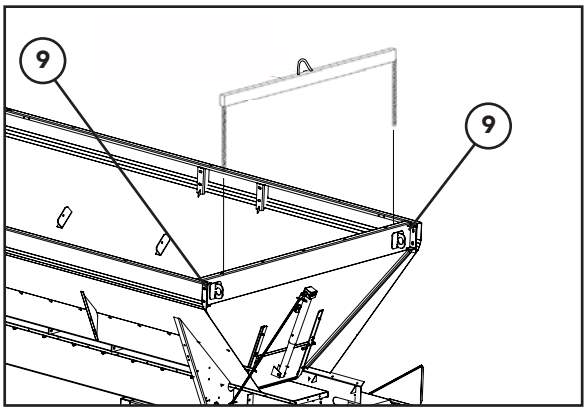

Figure 3

Insert Preparation

Feedgate Adjustment

⚠WARNING Stay out of the spreader. If it's necessary to enter the spreader, return to the shop, empty body, turn off all power, set vehicle brakes, lock engine starting switch and remove keys before entering. Tag all controls to prohibit operation. Tags should be placed, and later removed, only by person working in the body.

Adjust the insert's front feedgate prior to installation.

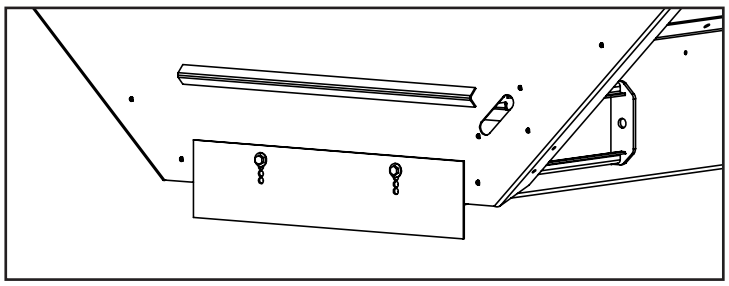

Figure 2

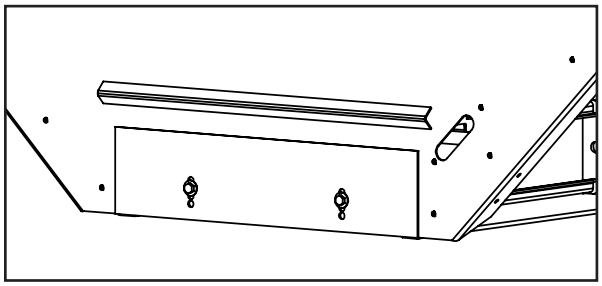

Figure 3

To adjust main bin's feedgate opening, position front feedgate on MultApplier/MultiBin as necessary to achieve a 1 1/2 inch (3.81 cm) (Figure 2) to 4 inch (10.16 cm) (Figure 3) opening in 1/2 inch increments.

Insert Installation

⚠WARNING Use only lifting devices that meet or exceed OSHA standard 1910.184. Never exceed work load limits or lift equipment over people. Empty spreader before lifting. Loads may shift or fall if improperly supported. Failure to comply with this requirement could result in death or serious injury.

Before installing the insert:

Parts Needed:

Description	Qty
MultApplier/MultiBin	1
Capscrew - 1/2 x 1 1/4 Grade 8	8
Flat Washer - 1/2 Grade 8	16
Lock Washer - 1/2 Grade 8	8
Hex Nut - 1/2 Grade 8	8

Insert Installation

To install insert bin:
Figure 1A - Make sure rubber sealer hardware (1) is loose.

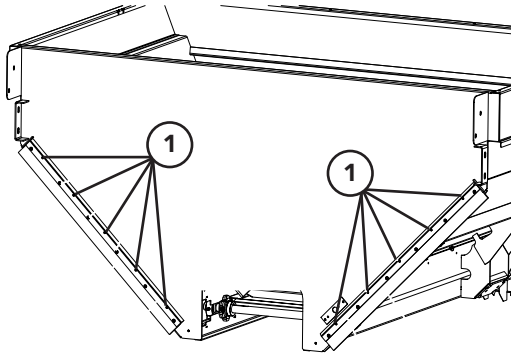

Figure 1A

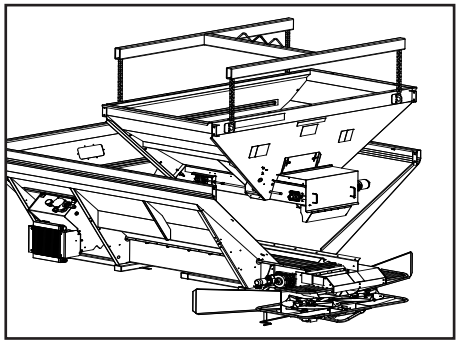

Figure 1B

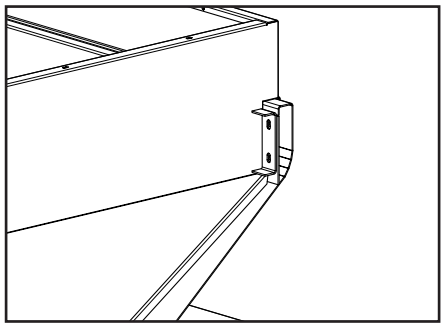

Figure 1C

Figure 1B - Hoist and slide insert into position between main bin's side sheets.
Figure 1C - Align front and rear mount brackets.
Make sure insert is resting on inside of main bin, and not resting on tops of side sheets.
Release tension on hoist but do not remove.

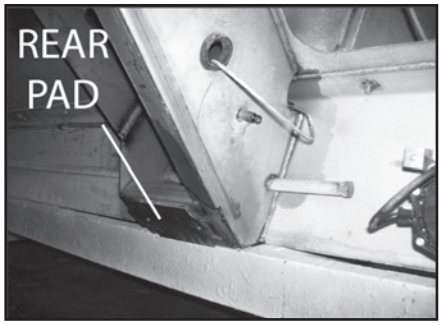

Figure 2A (uninstalled)

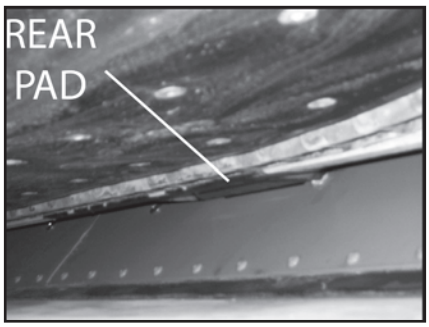

Figure 2B (shown installed)
View from rear of unit.

Figures 2A-2B - Visually make sure insert is centered from side to side in main bin and rear pads are resting on main bin.

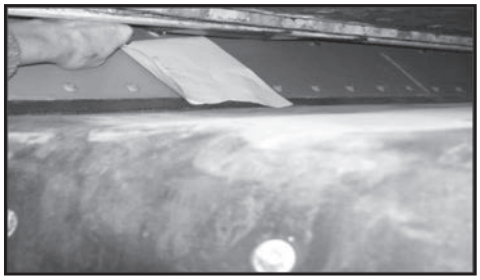

Figure 3

Figure 4

Figure 3 - There must be contact between rear pads and main unit. Check for contact by trying to slide paper between pads and main bin. If no contact, adjust insert.

Figure 4 - Inside main unit, locate front pads by lifting rubber sealers on front endgate.

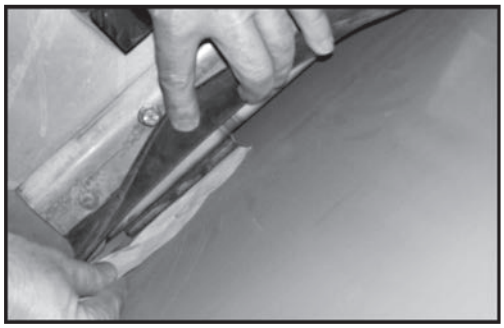

Figure 5A

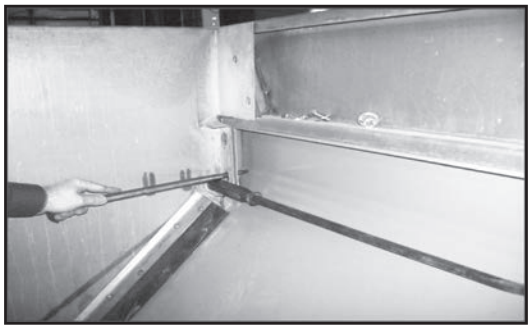

Figure 5B

Figures 5A-5B - There must be contact between front pads and main bin. Check for contact by trying to slide paper between pads and main bin. If no contact, adjust insert.
NOTE: Pry insert at mount brackets if necessary.

Figure 6

Figure 7

Figure 8A

Figure 6 - Once both front pads make contact, insert hardware in front mount brackets' lower holes. Shim between main bin and insert brackets if distance is larger than 1/8" (.32cm). Tighten hardware per torque recommendations in this manual.

Figure 7 - Make sure front feedgate is level. Lower endgate sealers so flush with chain shields and tighten hardware.

NOTICE Leakage of material may occur if the sealer belts are not set properly on the front of the insert. New Leader Manufacturing is not liable for lost material due to improperly installed sealer belts.

Figure 8A-8B - Make sure there is a complete seal covering the gap between the insert and the main bin's side sheets. Tighten all hardware (1) on rubber sealers at front of insert.

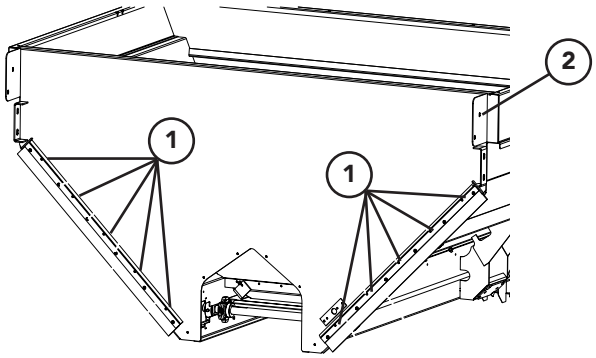

Figure 8B

Make sure rear pads are still in place against main bin. Install hardware in lower holes of rear mount brackets. Shim between main bin and insert brackets if distance is larger than 1/8" (.32cm). Tighten hardware per torque recommendations in this manual.

Make sure insert's side sheets are not resting on top of main bin's side sheets.

Install hardware (2) in all four mount brackets' upper holes. Tighten hardware per torque recommendations.

Remove hoist.

Inspect unit for foreign debris in conveyor area.

Figure 9 - Route lubrication lines and install in the grease bank.

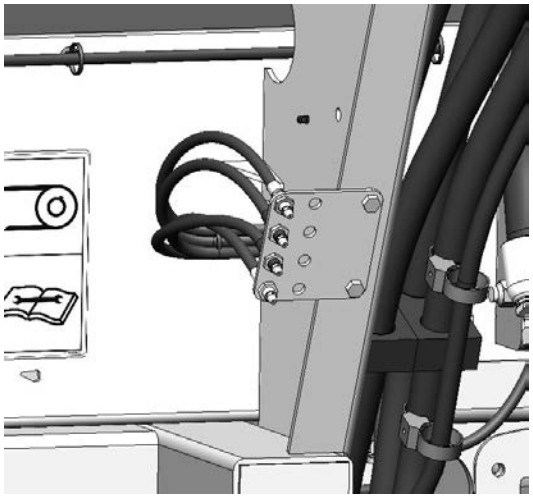

Figure 9

Lower Divider - Multibin

The following steps apply to MultiBin units only. Continue to "Hydraulics" for MultApplier units.

NOTICE Highway Equipment Company will not be liable for misapplied material due to an improperly adjusted divider, spreader or both.

Parts Needed:

Description	Qty
Divider - Lower Weldment	1
Capscrew - 5/16 x 1	4
Washer - Flat 5/16	8
Nut - Lock 5/16 SS	4

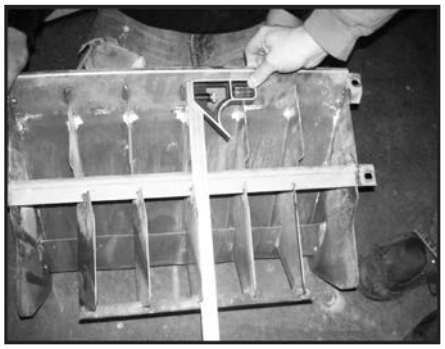

Figure 12

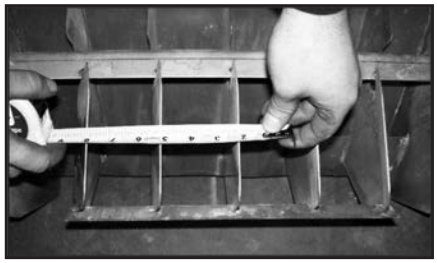

Figure 13

Figure 14

1. Figure 12 - Make sure center fin is square to rear panel.
2. Figure 13 - Measure distance between Lower Divider fins to make sure they are all 3" (8cm) apart. Adjust top of fin as necessary.
3. Figure 14 - Slide Lower Divider between bottom of MultiBin and Spinner Divider as shown.

Figure 15

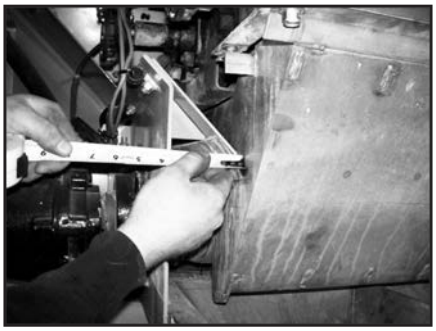

Figure 16

4. Figure 15 - Lift Lower Divider to bottom of MultiBin, align holes and loosely install front and rear hardware.

5. Figure 16 - Verify Lower Divider is square by measuring from each side to main bin's chain shields. Make sure distances are equal.

6. Make sure Lower Divider is centered over Material Divider. Contact Highway Equipment Company if they cannot be aligned.

7. Tighten front and rear hardware per torque recommendations. Refer to "Standard Torques" in the "Lubrication and Maintenance" section of the spreader manual.

Hillside Divider & Conveyor Cover - MultApplier

The following steps apply to MultApplier units only. Continue to "Micro Cover Installation" for MultiBin units.

NOTICE Highway Equipment Company will not be liable for misapplied material due to an improperly adjusted divider, spreader or both.

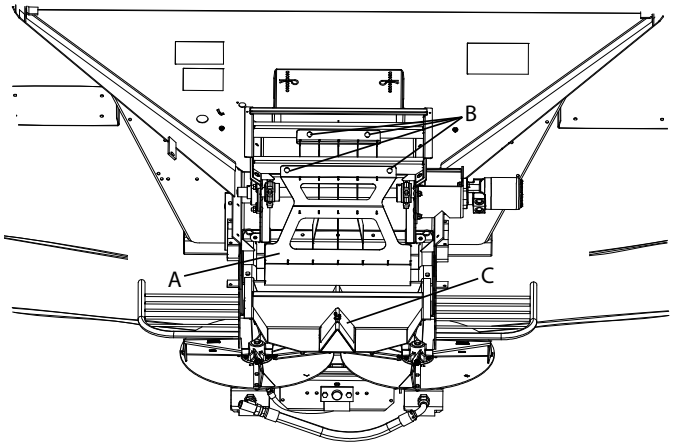

Figure 17A - MultApplier Hillside Divider

Loosen hardware from rear two chain shield holes on each side of MultApplier. Install MultApplier Hillside Divider (A) and fasten to Support using single bin Hillside Divider hardware removed before MultApplier installation (B). Adjust Hillside Divider so that the middle divider is centered over both conveyors and the Material Divider (C) as shown in Figure 17. Tighten all hardware to recommended torque.

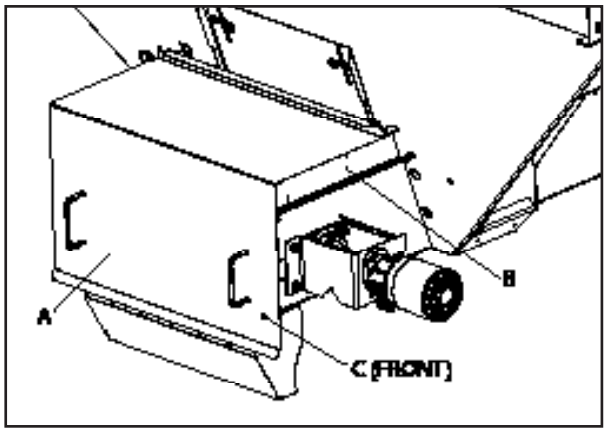

Figure 17B - MultApplier Dual Conveyor Cover

Parts Needed:

Description	Qty
Cover	**1**
Hair Pin	**2**

Micro Cover Installation

Air Supply and Electrical Requirements

Auxiliary Supply Line	Electrical Connections
Dry Air - 85 PSIG (5.86 Bar)	Red = 12 V (+) Black = Ground (-)

Refer to "MultiBin Lid Pneumatics" in the spreader parts manual for air line connections.

Make sure all hardware on insert is torqued before installing cover.

⚠WARNING

Pressurized air may cause sudden movement of parts. Do not service cover components until safety precautions have been performed.
Take preventative measures to prevent falling or runaway of cylinder or mechanism before maintenance and restart of spreader.
Exhaust all residual air and cut the pressure supply for components before servicing.
Injury can occur if precautions are not taken. Failure to comply with this requirement could result in death or serious injury.

⚠WARNING

Open cover lid with air prior to removing actuator pin and block cover lid to prevent closing. Unintentional closing could cause injury. Failure to comply with this requirement could result in death or serious injury.

Fasten a three-point lifting device to two lift hooks and one hole in guide mount as shown in Figure 18. Hoist cover onto MultiBin as shown in Figure 19. Align slots and attach hardware. Tighten to recommended torque. Secure fittings and airline tubing on MultiBin with wire ties as shown in Figure 20. Connect to air and electrical systems. Open lid and install additional hardware inside cover. Install screens.

Refer to "Air Schematic" page in the Troubleshooting section for air supply requirements.

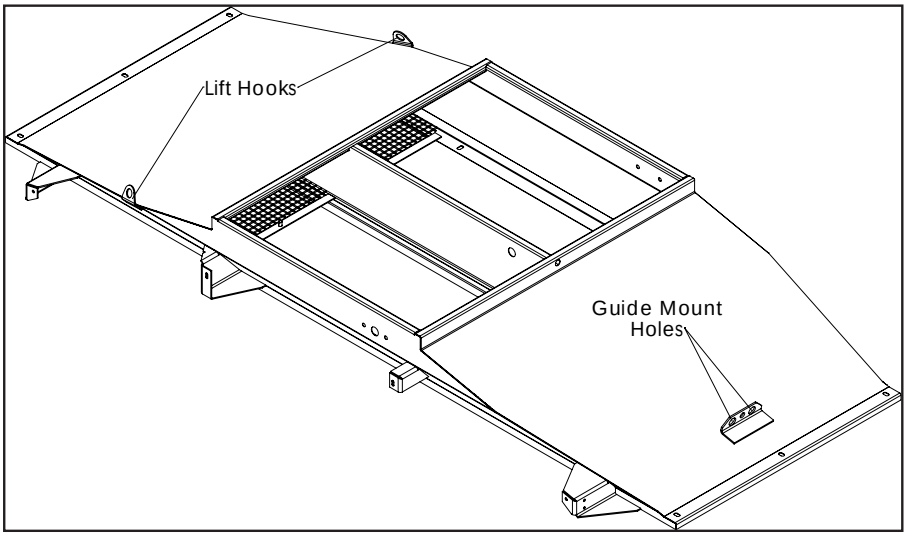

Figure 18 - Lift Hooks & Guide Mount

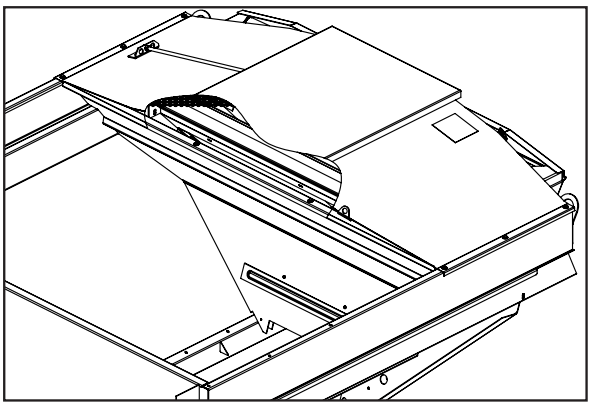

Figure 19 - Cover Placement

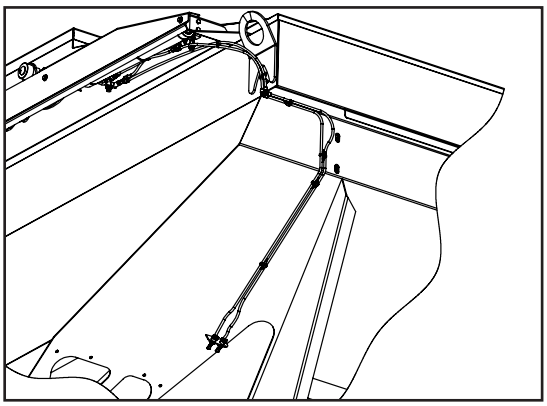

Figure 20 - Cover Airline Tubing

Electrical Connections

Connect all electrical control circuits. The supply conductor should be connected directly to the battery. All wiring should be approved automotive insulated wire, supported adequately with insulating ties or straps, and located where it will not interfere with any control or access. Make sure wiring does not contact any moving parts or sharp edges and is kept away from hydraulic lines and heated parts.

Refer to "Controller" parts pages for illustrations of master/slave control modules.

Insert Removal/Endgate Installation

Remove insert and reinstall endgate, Inverted "V", single conveyor Hillside Divider, etc. by following applicable installation instructions in reverse order. Make sure the insert hydraulics, electrical connections and air lines are disconnected from the spreader before removal. See "Inverted V" in spreader parts manual.

Hydraulics

Attach insert hoses to spreader hoses as shown in Figures 1A - 1C as applicable. Plug in rate sensor.

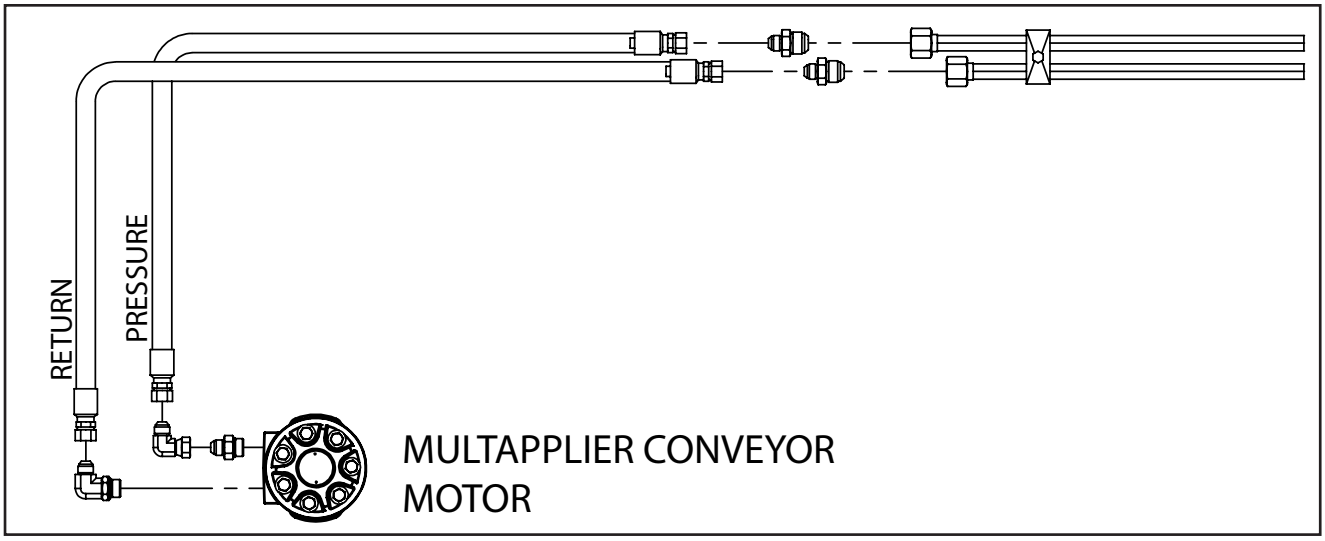

Figure 1A - MultApplier Operation

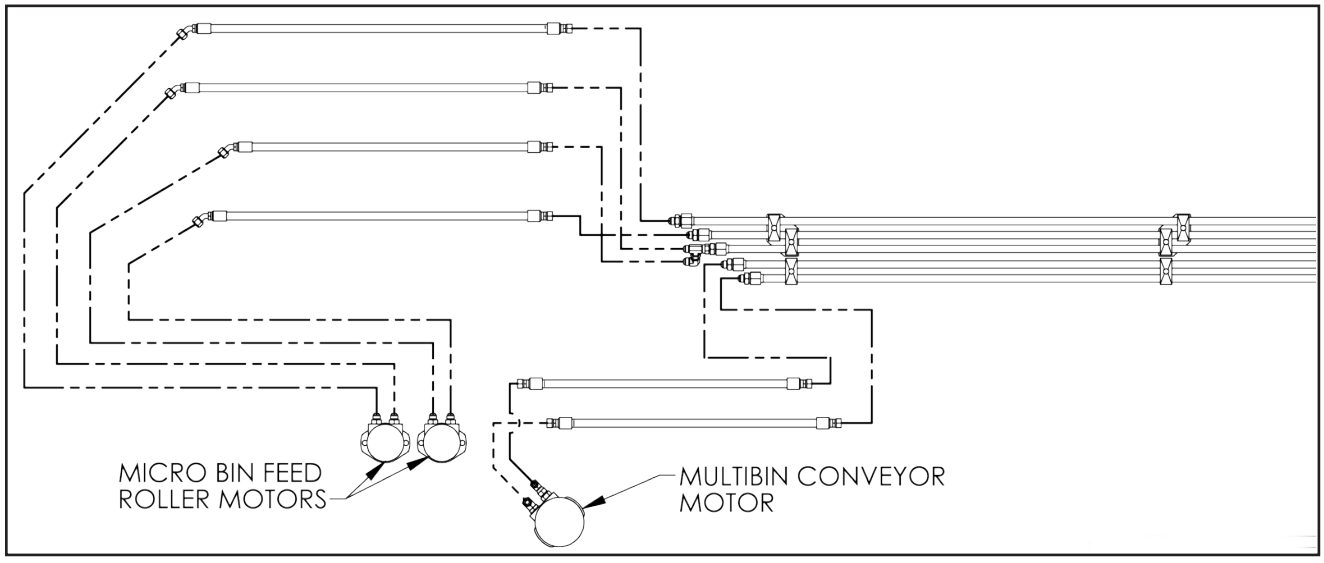

Figure 1B – MultiBin Operation Dual Micro

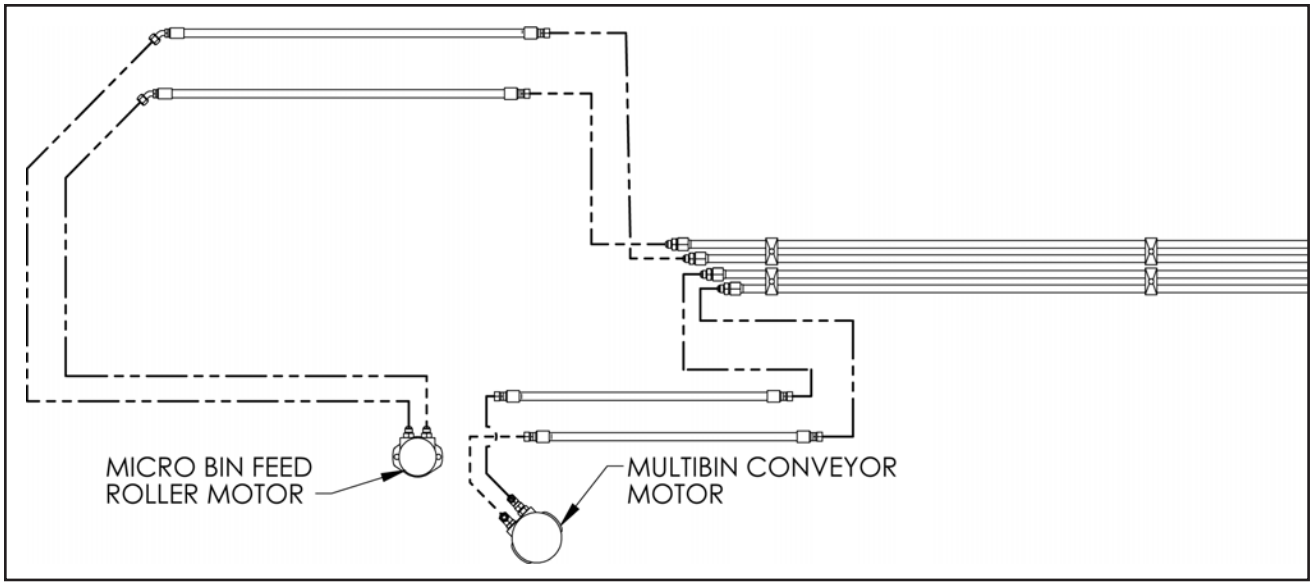

Figure 1C – MultiBin Operation Single Micro

Install Valve Bracket

Parts Needed:	
Description	**Qty**
Mounting Bracket	1
Capscrew - .375-16NC X 1 SS	4
Flat Washer - .375 SS	4
Lock Nut - .375-16NC SS	4

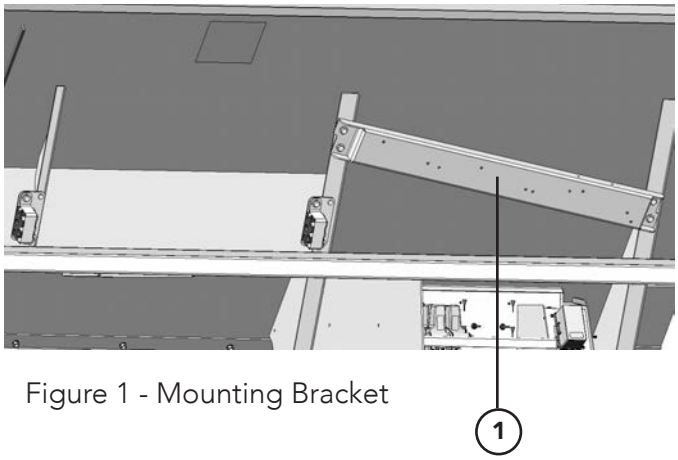

Figure 1 - Mounting Bracket

1. Install Bracket (1) using associated hardware.
2. Tighten hardware per torque recommendations.

NOTE: Procedure shown is for MultApplier. Multi Bin process is similar.

Install Valve

Parts Needed:	
Description	**Qty**
Valve	1
Capscrew - .25-20NC X 3.25 SS	2
Washer - .25 ID X .40 OD X .13 THK SS	2
Washer - .25 ID X .40 OD X .5 THK SS	2
Lock Nut - .25-20NC SS	2

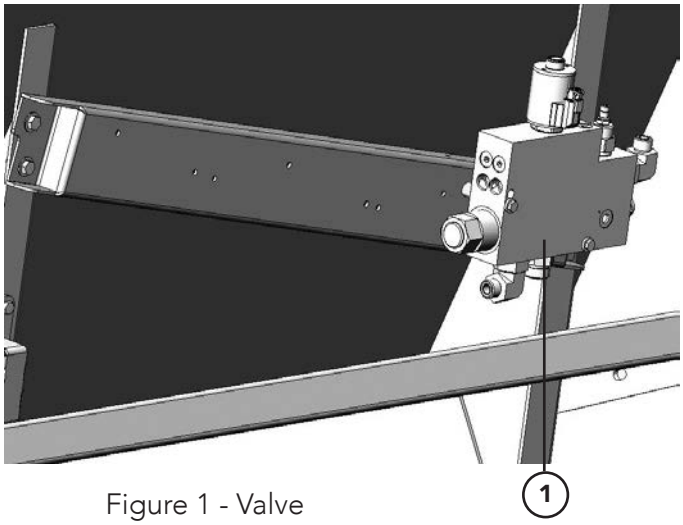

Figure 1 - Valve

1. Install Valve (1) using associated hardware.
2. Tighten hardware per torque recommendations.

NOTE: Procedure shown is for MultApplier. Multi Bin process is similar.

Install Clamp Assemblies

Parts Needed:	
Description	**Qty**
Plate	4
Bar Tube Clamp	4
Rubber Insert	4
Capscrew - .313-18NC X 1 SS	8
Capscrew - .375-16NC X 1.25 SS	4
Flat Washer - .313 SS	8
Flat Washer - .375 SS	4
Lock Nut - .313-18NC SS	8
Lock Nut - .375-16NC SS	4

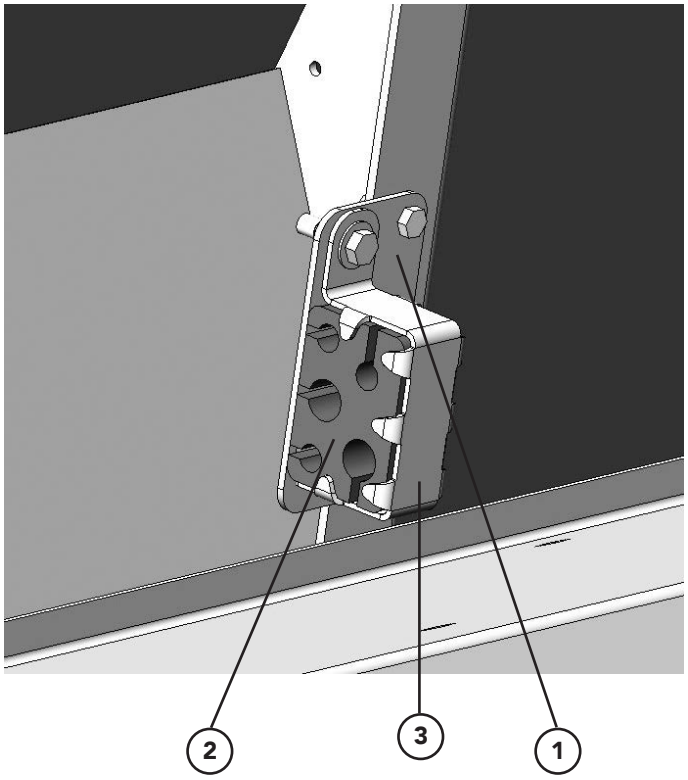

Figure 1 - Clamp Assembly

1. Install Plate (1) using associated hardware.
2. Insert tubing into Rubber Insert (2).
3. Secure in place with Bar Tube Clamp (3).
4. Tighten hardware per torque recommendations.

NOTE: Procedure shown is for MultApplier. Multi Bin process is similar.

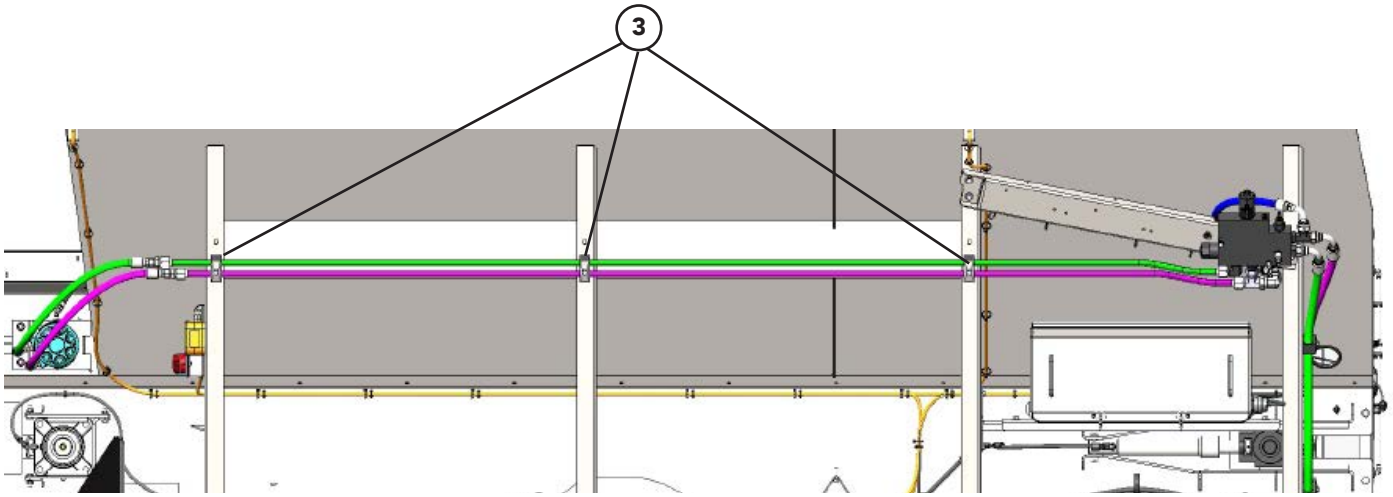

Figure 2 - Clamp Assemblies

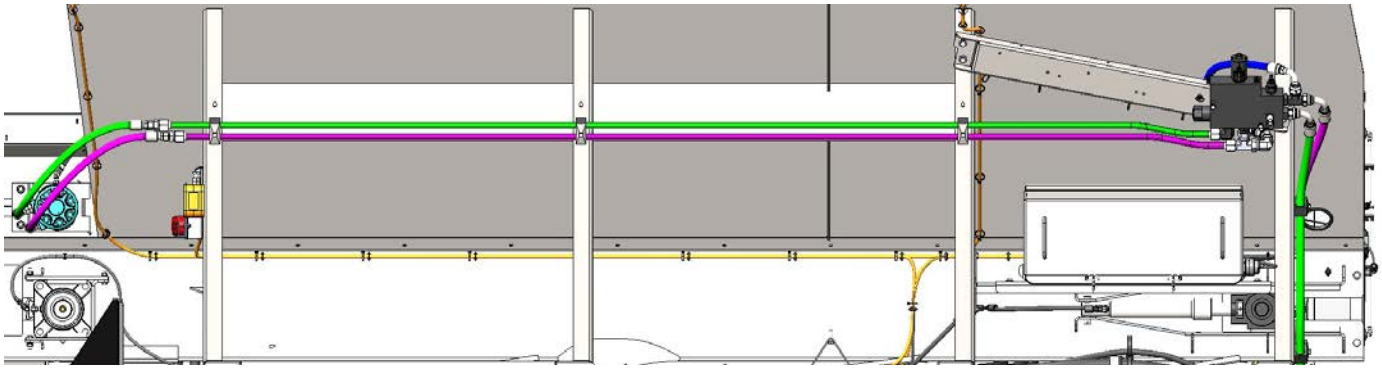

Figure 1A - MultApplier Right Side

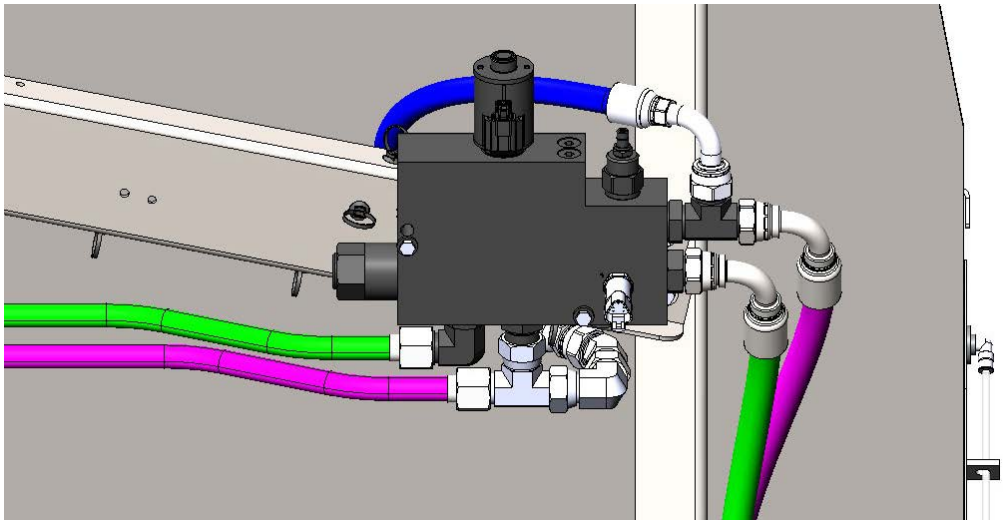

Figure 1B - MultApplier Valve Assy Connections

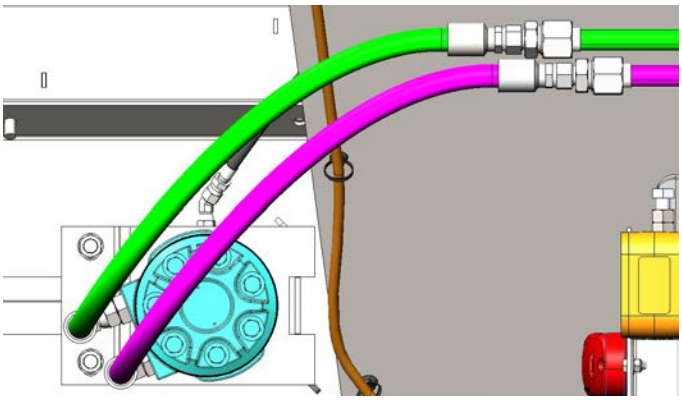

Figure 1C - MultApplier Motor Connections

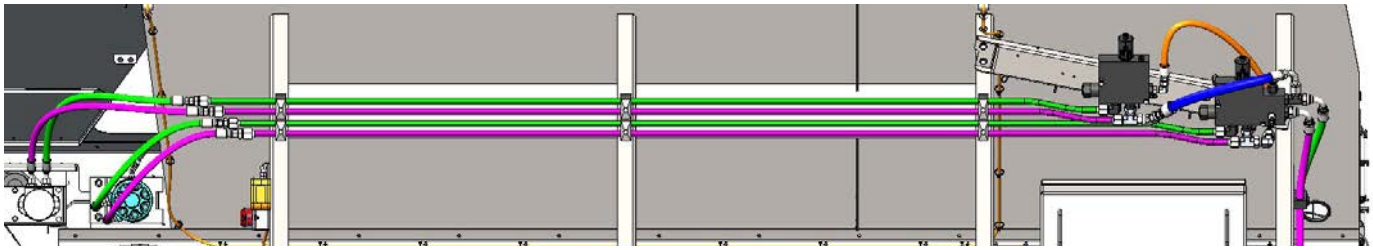

Figure 2A - 3-Bin Right Side

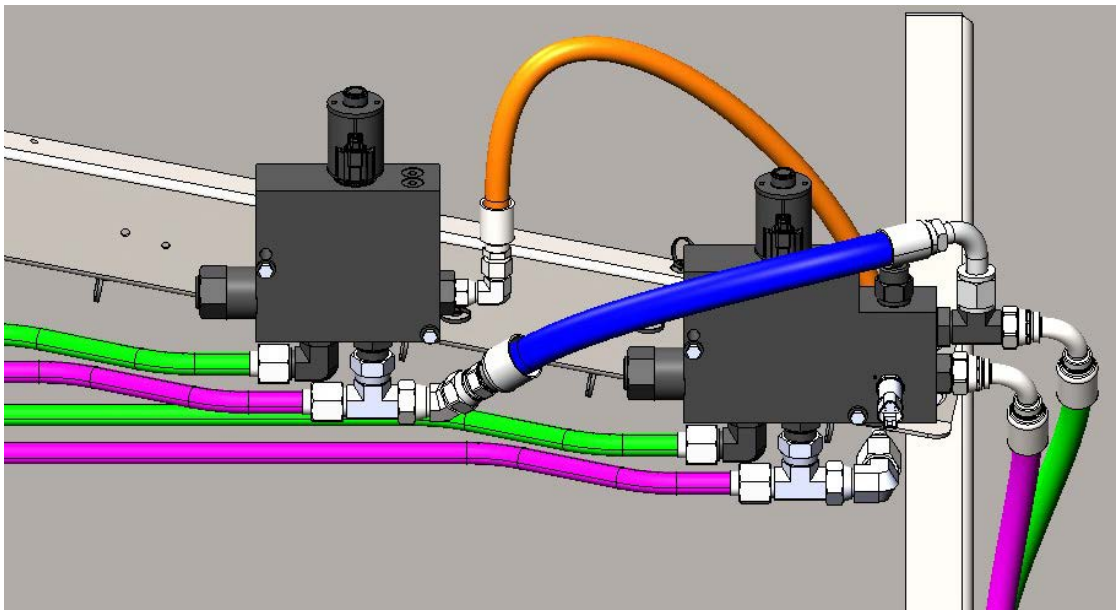

Figure 2B - 3-Bin Valve Assy Connections

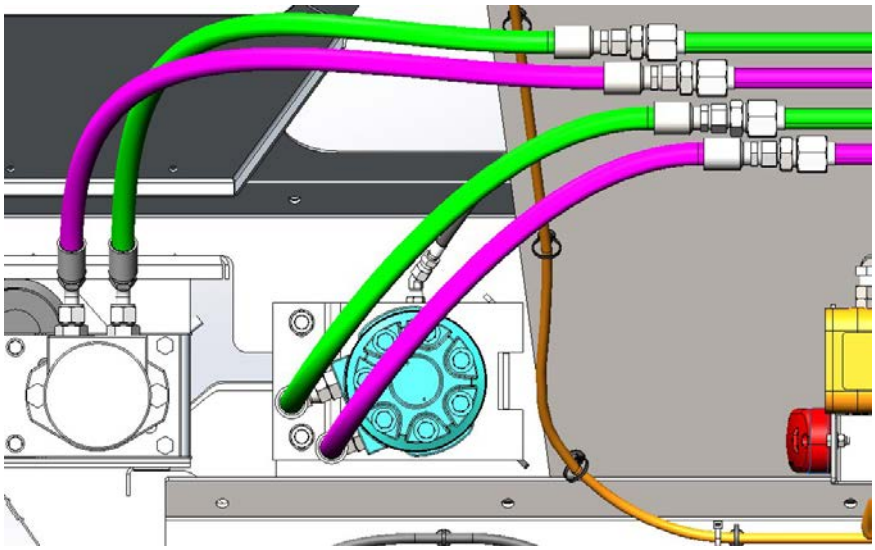

Figure 2C - 3-Bin Motor Connections

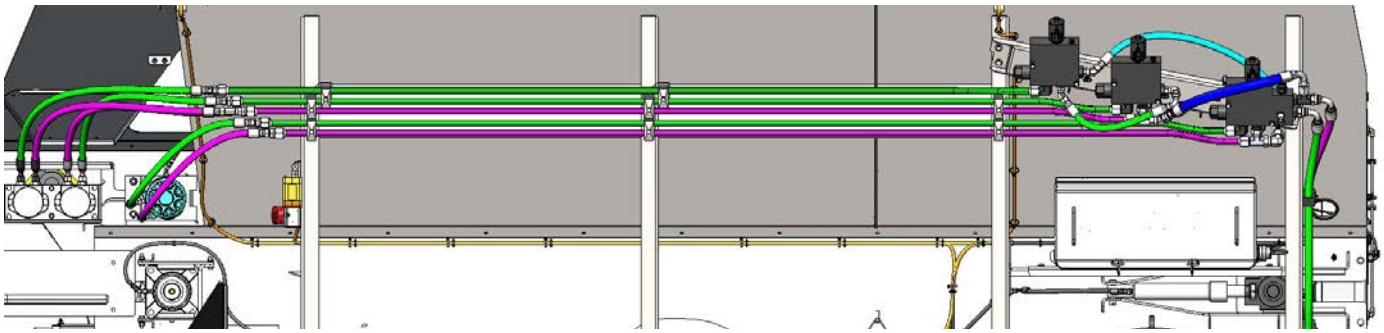

Figure 3A - 4-Bin Right Side

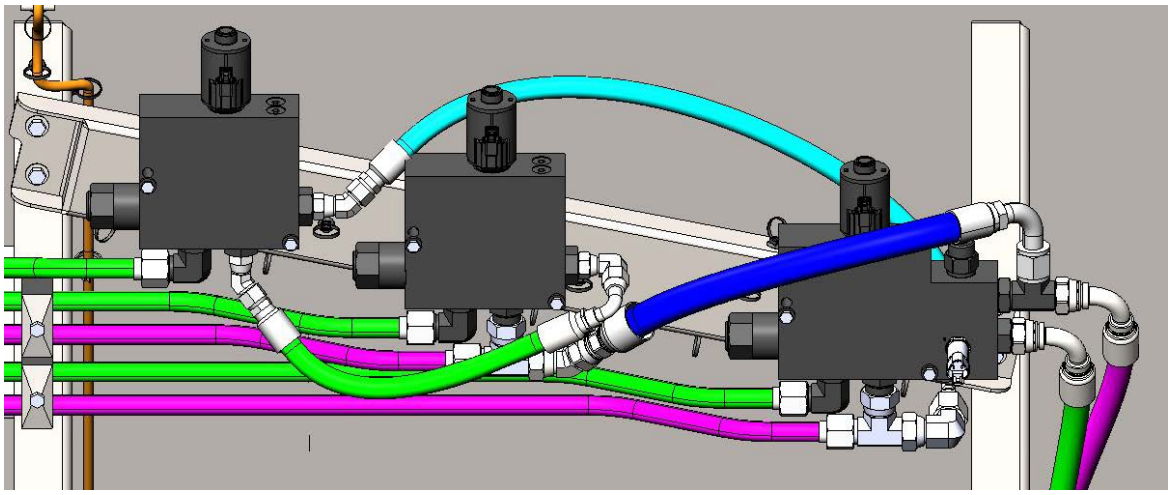

Figure 3B - 4-Bin Valve Assy Connections

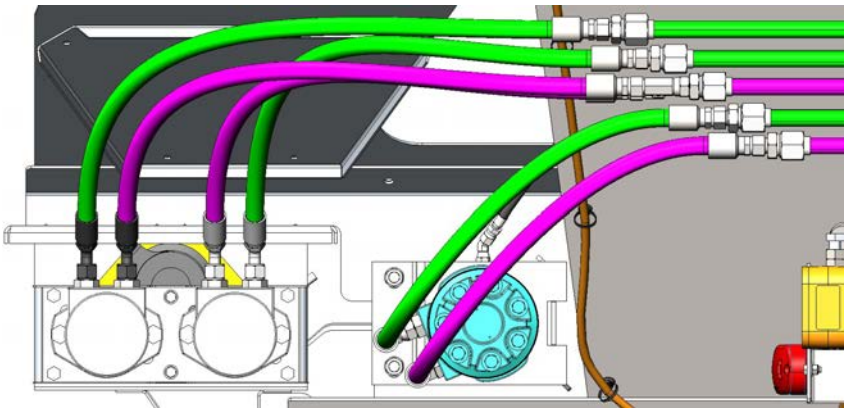

Figure 3C - 4-Bin Motor Connections

Hydraulics Removal

Route hydraulic hoses on the spreader and the insert as shown in Figures 1A - 1C as applicable.

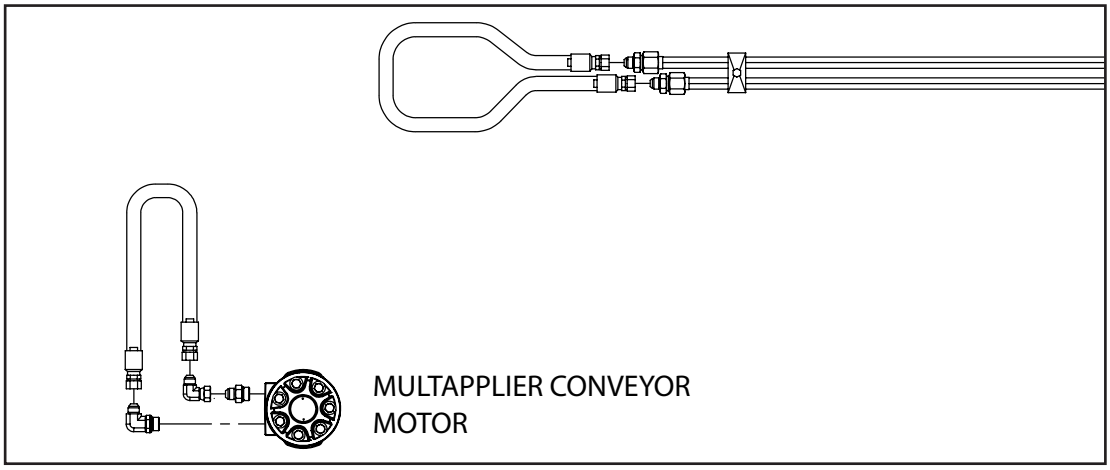

Figure 1A - Detach MultApplier

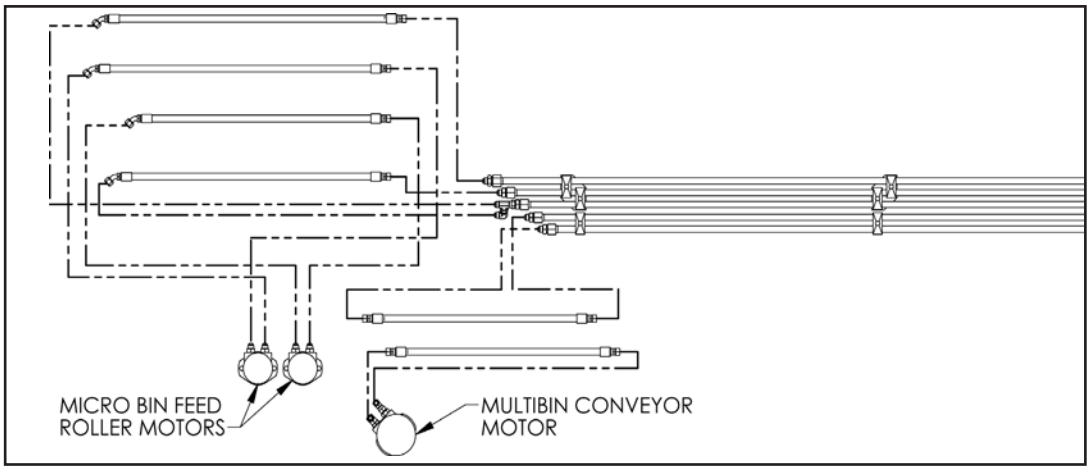

Figure 1B – Detach MultiBin Dual Micro

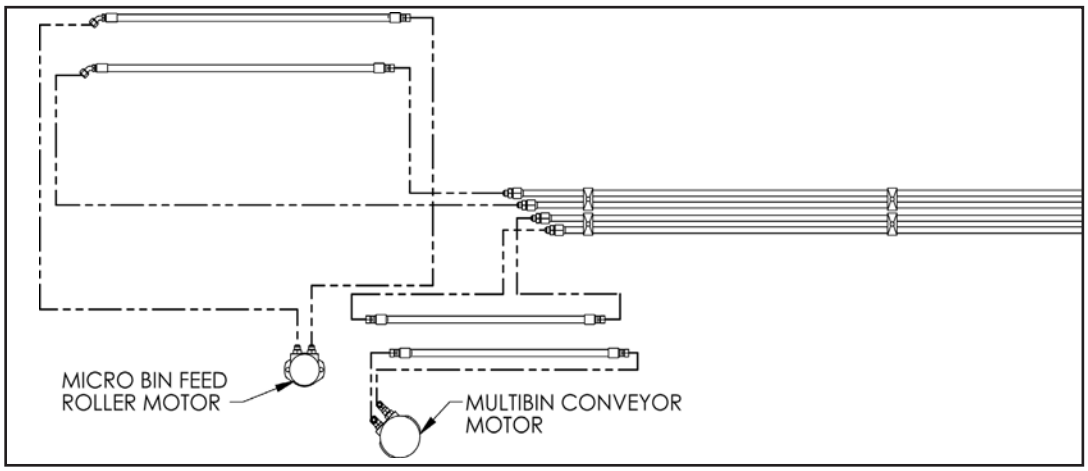

Figure 1C – Detach MultiBin Single Micro

Electrical

Use the following illustrations to aid in electrical connections.

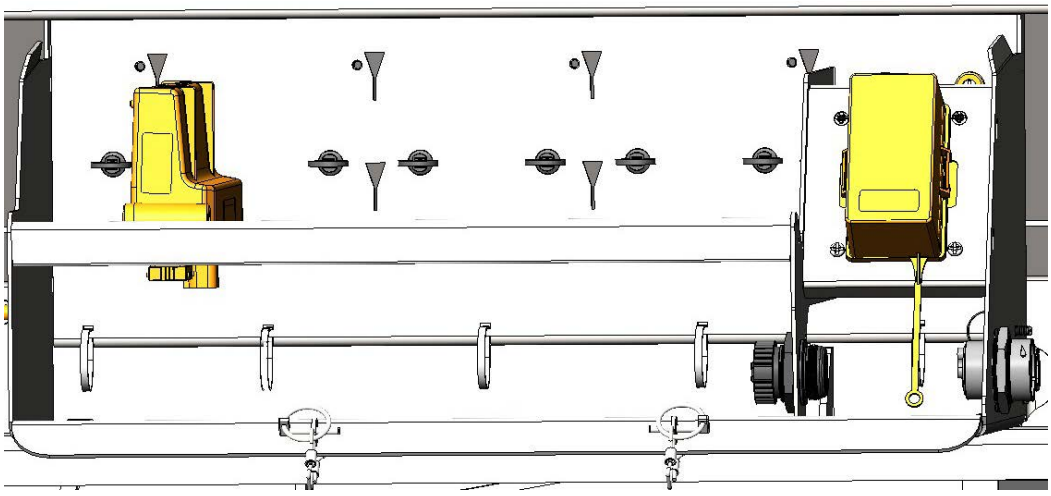

Figure 1 - Enclosure Single Bin

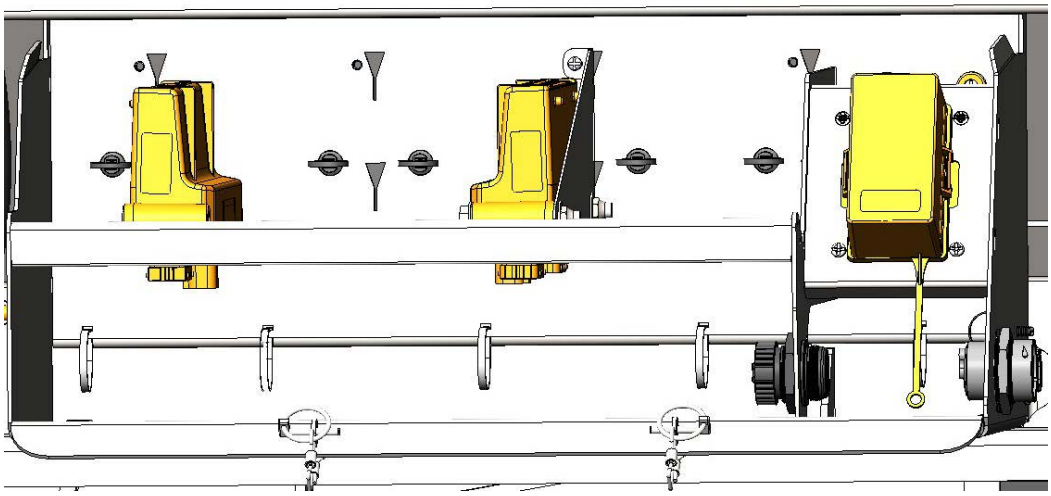

Figure 2 - Enclosure Multaplier

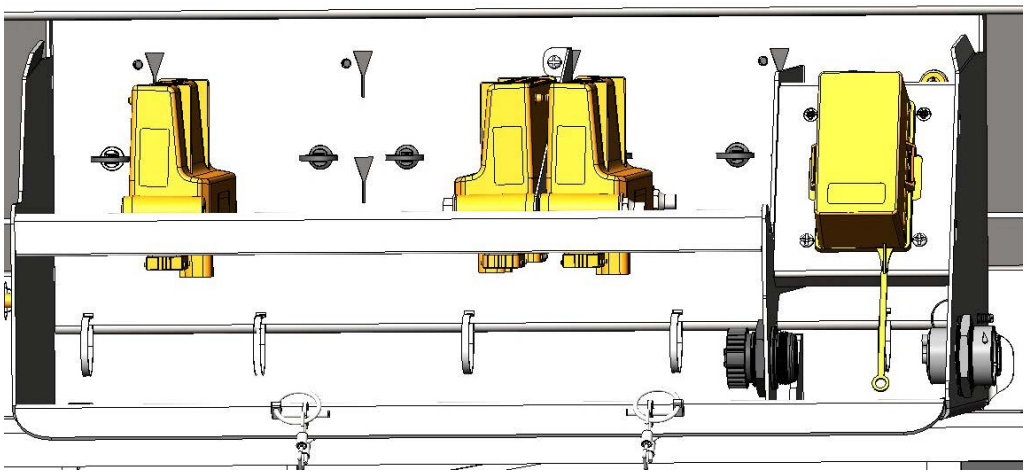

Figure 3 - Enclosure Three Bin

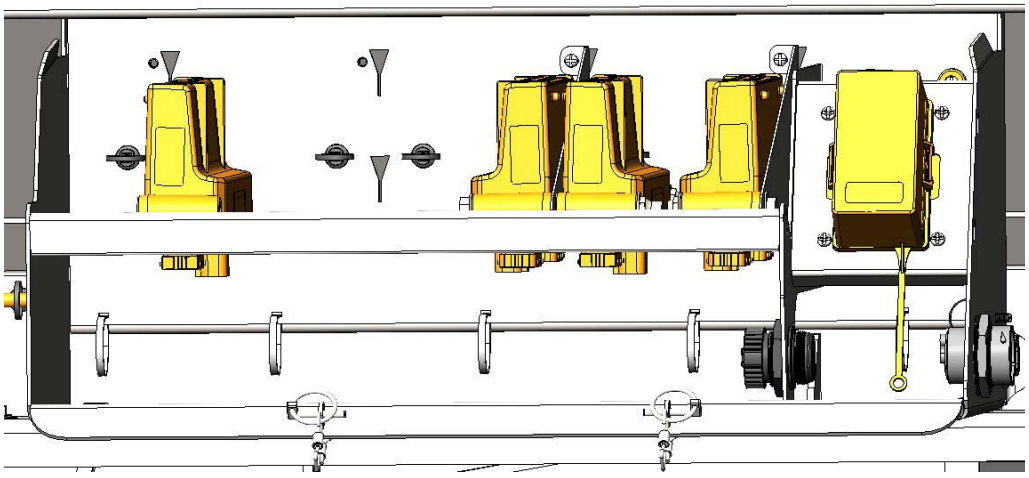

Figure 4 - Enclosure Four Bin

Single Bin

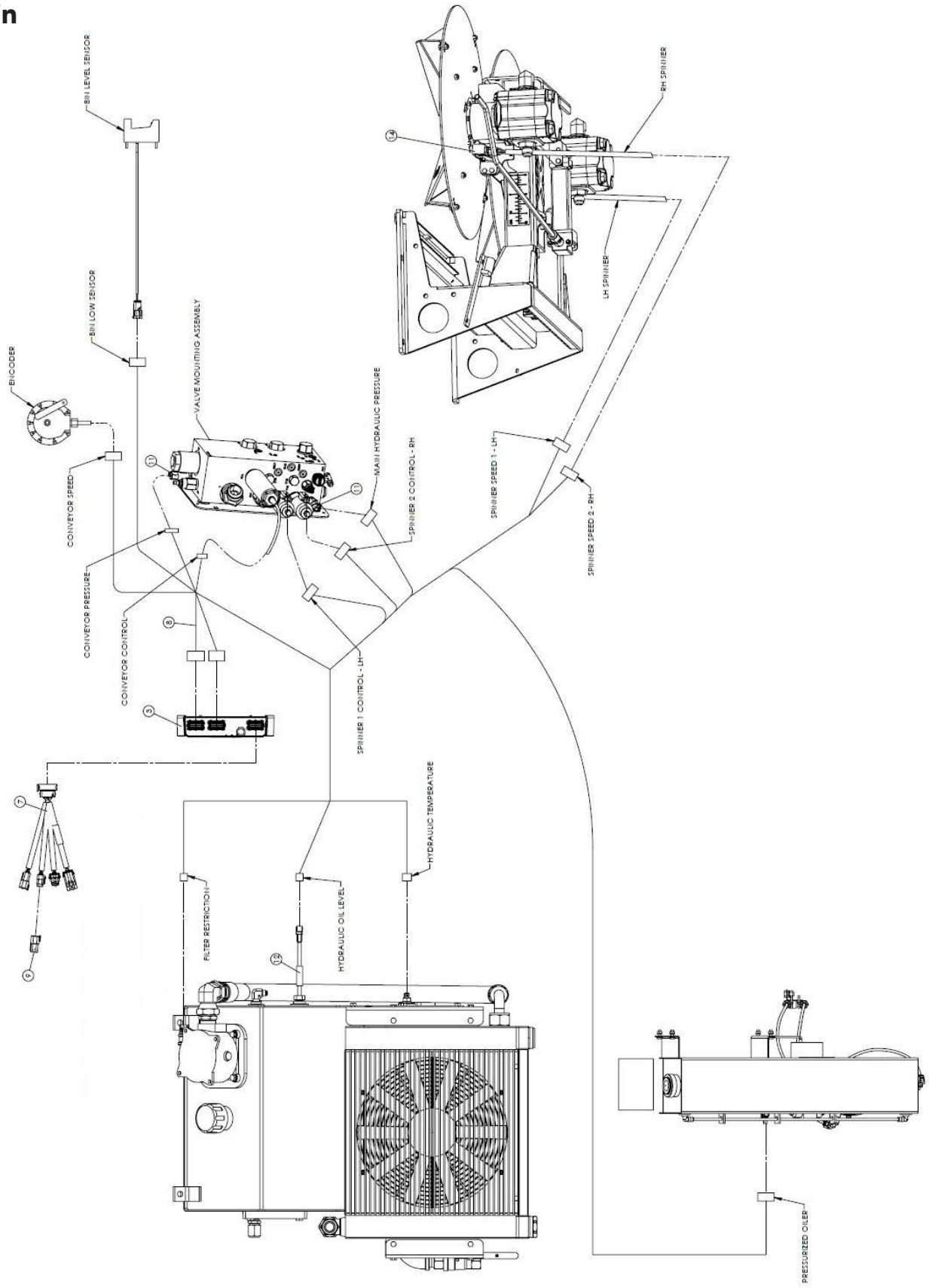
BIN LEVEL SENSOR
BIN LOW SENSOR
ENCODER
CONVEYOR SPEED
CONVEYOR PRESSURE
CONVEYOR CONTROL
VALVE MOUNTING ASSEMBLY
MAIN HYDRAULIC PRESSURE
SPINNER 2 CONTROL - RH
SPINNER 1 CONTROL - LH
SPINNER SPEED 1 - LH
SPINNER SPEED 2 - RH
RH SPINNER
LH SPINNER
HYDRAULIC TEMPERATURE
FILTER RESTRICTION
HYDRAULIC OIL LEVEL
PRESSURIZED OILER

MultApplier

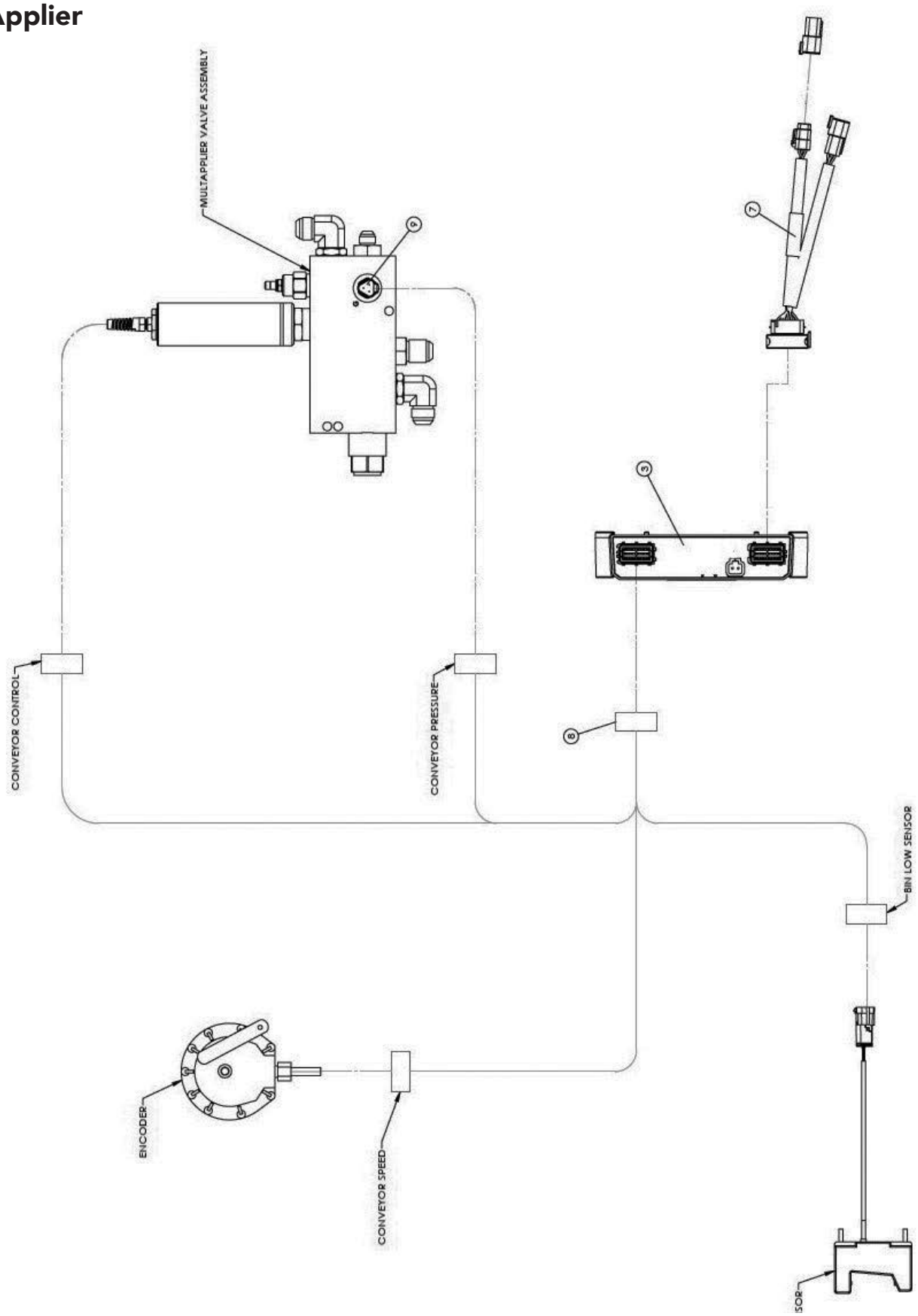

Three Bin

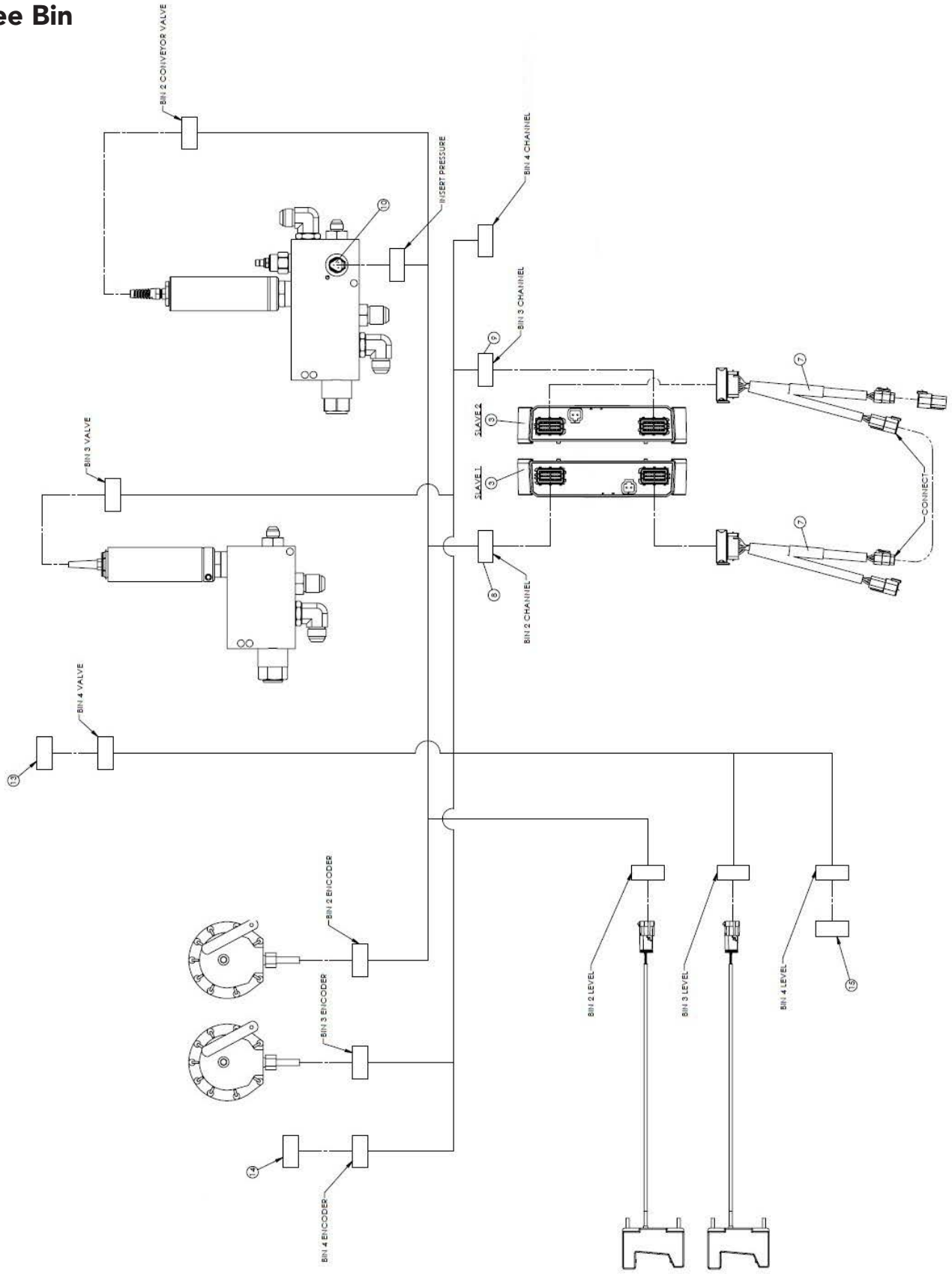
BIN 2 CONVEYOR VALVE
INSERT PRESSURE
BIN 4 CHANNEL
BIN 3 CHANNEL
SLAVE 2
SLAVE 1
CONNECT
BIN 3 VALVE
BIN 2 CHANNEL
BIN 4 VALVE
BIN 2 ENCODER
BIN 3 ENCODER
BIN 4 ENCODER
BIN 2 LEVEL
BIN 3 LEVEL
BIN 4 LEVEL

Four Bin

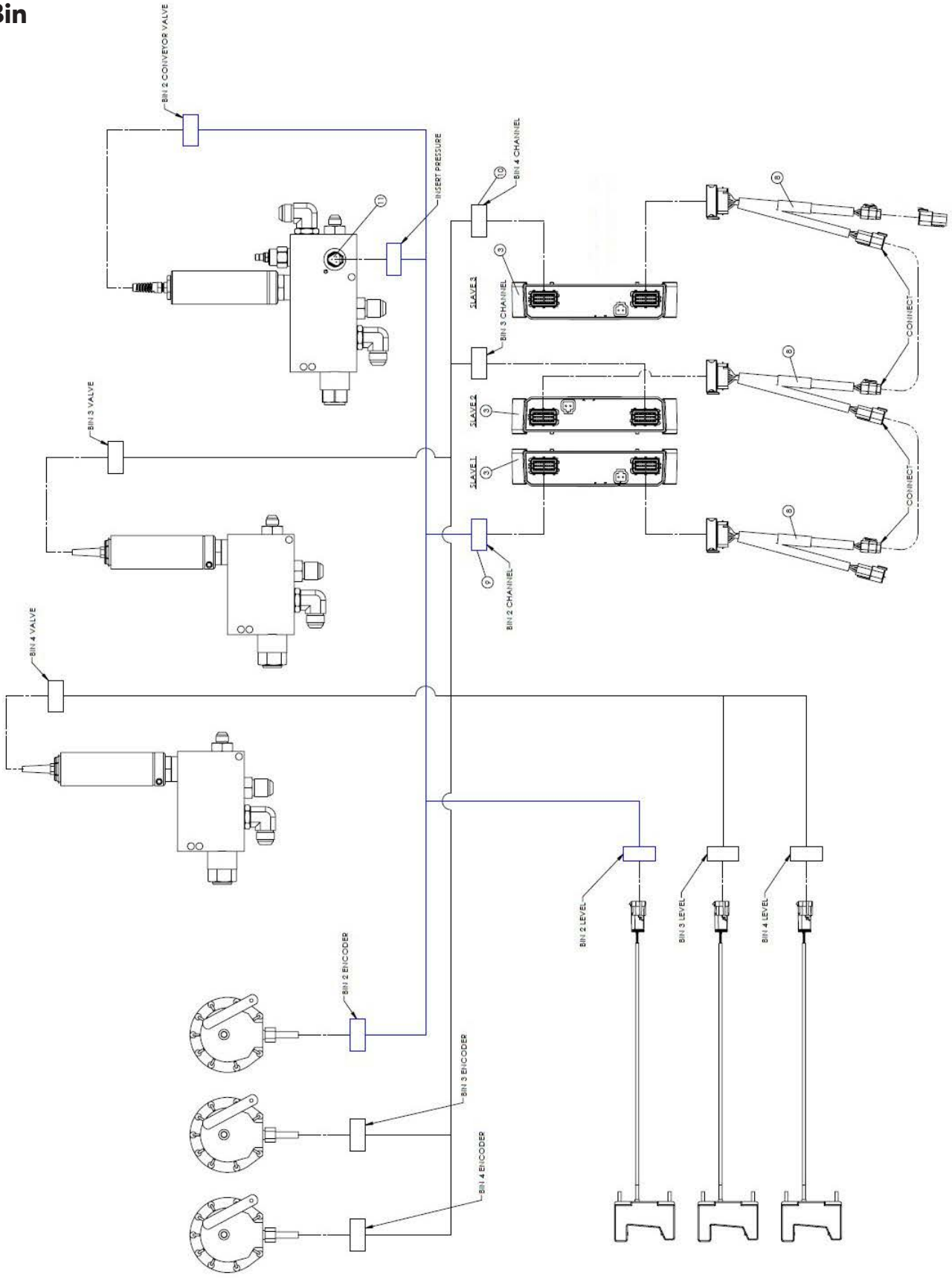
BIN 2 CONVEYOR VALVE
INSERT PRESSURE
BIN 4 CHANNEL
SLAVE 3
BIN 3 CHANNEL
SLAVE 2
SLAVE 1
BIN 2 CHANNEL
CONNECT
CONNECT
BIN 3 VALVE
BIN 4 VALVE
BIN 2 ENCODER
BIN 3 ENCODER
BIN 4 ENCODER
BIN 2 LEVEL
BIN 3 LEVEL
BIN 4 LEVEL

Insert Removal/Endgate Installation

Remove insert and reinstall endgate, Inverted "V", single conveyor Hillside Divider, etc. by following applicable installation instructions in reverse order. Make sure the insert hydraulics, electrical connections and air lines are disconnected from the spreader before removal. See "Inverted V" in spreader parts manual.

General Description

The Case IH NL4500G4 EDGE Trident is a hopper type spreader intended for spreading free flowing granular agricultural materials, such as chemical fertilizers, agricultural limestone, and gypsum. It is intended for mounting on the Case IH 5550 Trident - a high-clearance post-emergence application vehicle.

The unit is hydraulically powered and provides independent variable speed control for the spinner and full automatic ground speed control for the conveyor.

The conveyor delivers material to the spinners through an adjustable metering gate at the rear of the hopper body. An orbital type hydraulic motor mounted to a 6-to-1 ratio spur gear case drives the conveyor. The conveyor is a 30-inch (76cm) wide #4 belt-over-chain (BOC) type conveyor consisting of parallel strands of pintle chain joined by crossbars every other link. Moderately oil-resistant (MOR) belting is fastened to the top side of the conveyor at each crossbar.

The spinner assembly has two 24-inch (61cm) diameter dished discs. Each disc has four formed and heat treated fins that are adjustable to radial angle. The spinner is fully adjustable by means of a rotating handle.

The optional 304 stainless steel hopper style spreader MultApplier or MultiBin may be inserted in the main bin.

- Inserting the MultApplier allows for two separate materials to be spread simultaneously. It features a 24-inch (61cm) wide #4 belt-over-chain type conveyor consisting parallel strands of pintle type chain joined by cross bars every other link. Moderately oil-resistant belting is fastened to the conveyor at each crossbar. The direct-driven conveyor is also controlled independently enabling the delivery of material at variable rates through the adjustable gate at the rear of the hopper body. The hillside divider improves material placement on the spinner for a more effective spread pattern.

- Inserting the MultiBin will convert the spreader to a 3 or 4 hopper unit, which can be used independently or together for straight and variable rate applications. The front two hoppers dispense fertilizer products while the single or dual hopper at the rear dispense(s) micronutrients or seeding products. The rear bin(s) are sloped forward to improve chassis weight distribution. Material is delivered from the front bins by conveyor through adjustable metering gates. The rear bin(s) deliver material through a meter wheel system. Bin sensors are installed in all bins to warn when materials are low in each micronutrient bin.

  The MultiBin also comes equipped with an upper and lower material divider which improves material placement on the spinner for a more effective spread pattern.

  An optional micronutrient stainless steel cover which opens and closes with a stainless steel air cylinder is available.

  Screens installed on micronutrient bins keep large chunks of material out of the bins by breaking the material up as it enters the bins.

The optional 304 stainless steel MultApplier may be inserted in the main bin at any time.
This product is intended for commercial use only.

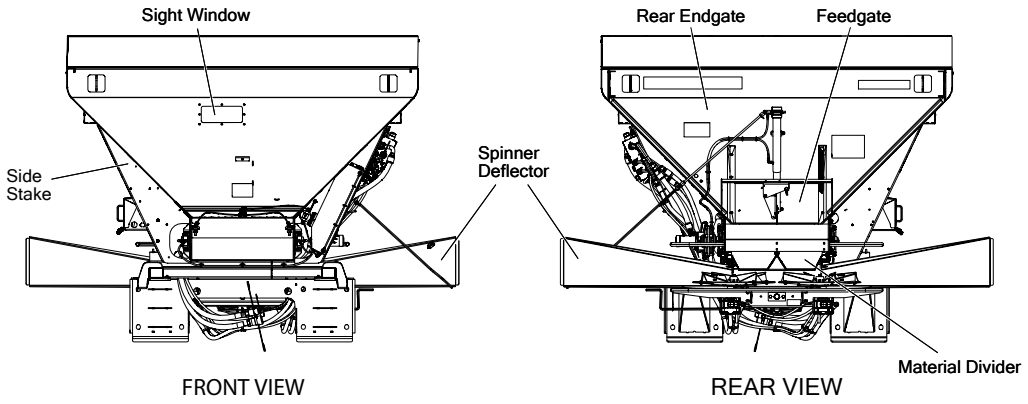
Sight Window
Side Stake
Spinner Deflector
Rear Endgate
Feedgate
Material Divider
FRONT VIEW
REAR VIEW

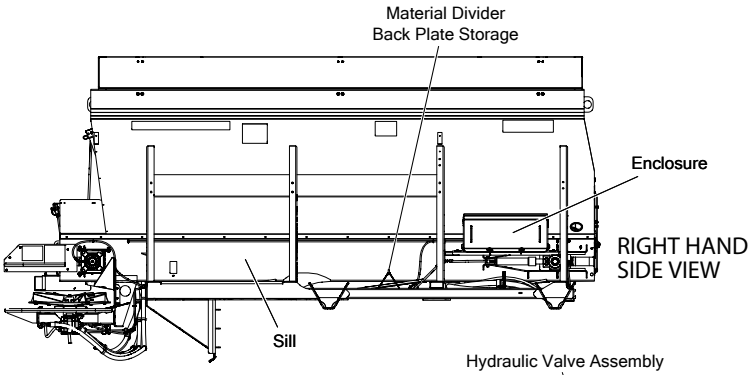
Material Divider Back Plate Storage
Enclosure
Sill
RIGHT HAND SIDE VIEW

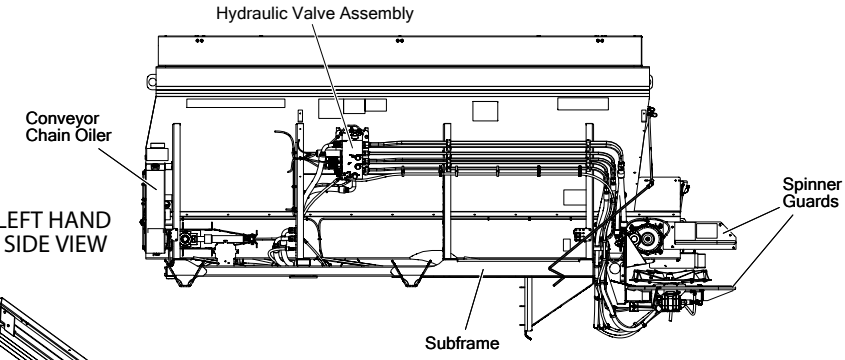
Hydraulic Valve Assembly
Conveyor Chain Oiler
LEFT HAND SIDE VIEW
Spinner Guards
Subframe

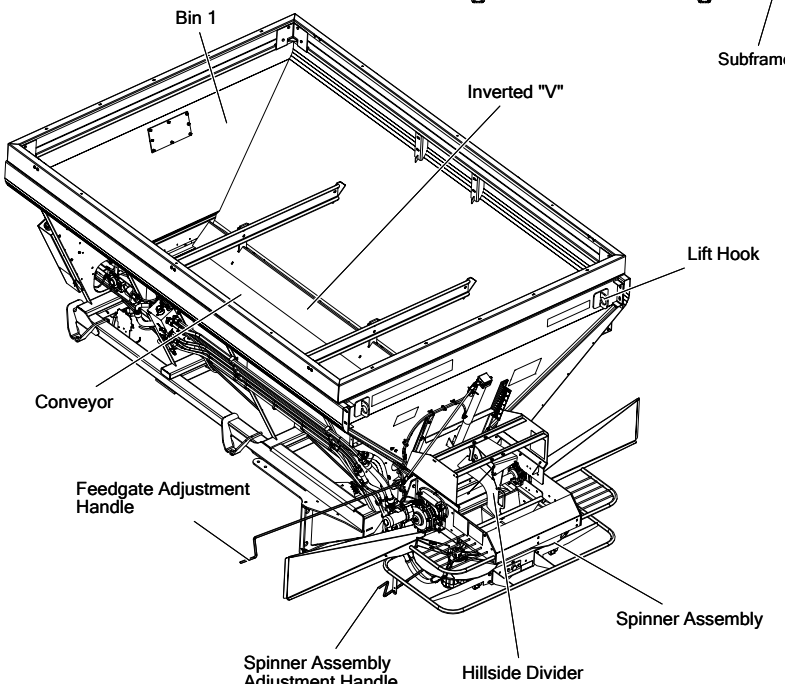
Bin 1
Inverted "V"
Lift Hook
Conveyor
Feedgate Adjustment Handle
Spinner Assembly
Spinner Assembly Adjustment Handle
Hillside Divider

Bin 1: Main holding bin for material or Insert. MultApplier and MultiBin inserts (shown on following pages) are configured as Bins 2-4 depending on type used.

Conveyor: Conveys material to rear of unit.

Conveyor Chain Oiler: Use to lubricate conveyor chain strands at the end of each day's use to prevent premature component failure.

Enclosure: Houses spreader control modules and fuse panel.

Feedgate: Adjustable gate mounted into Rear Endgate. Allows for variable rates of material flow by adjusting jack to desired height.

Hillside Divider: Ensures balanced flow of material across conveyor when on hillsides or uneven terrain.

Hydraulic Valve Assembly: Contains control valves for Bin 1 conveyor, spinners and automatic conveyor tension.

Inverted "V": Mounted inside Main Hopper when Insert not installed. Distributes weight pressure across conveyor, allowing for consistent material flow to Feedgate, and promotes an improved blend when spreading fertilizer.

Lift Hooks: Used to lift unit or insert with appropriately rated lifting device.

Material Divider: Ensures uniform spread pattern by directing material off of conveyor onto spinner discs.

Material Divider Back Plate Storage: Storage position for material divider back plate when removed for spreading lime.

Rear Endgate: Welded or bolt-in endgate (depending on model) furthest from chassis cab (Rear based on direction of travel). Holds mounted Feedgate, allowing for rear release of material from bin.

Sight Window: Allows viewing into Bin 1 from remote location, such as from ground or from vehicle cab.

Sill: Base of Main Hopper side walls. Contains Conveyor and supports machine walls.

Spinner Assembly: Contains adjustable G4 Spreader system, consisting of hydraulic spinners used for dispersal of various materials at different positioned settings allowing for consistent, even spread patterns across a wide variety of material with a high rate of accuracy.

Spinner Deflectors: Deflect material away from machine.

Spinner Guards: Upper and Lower guards, protects operators from spinner discs. Must be in place during any operation.

Side Stake: Side support for machine walls.

Sub frame: Supports body, attaches to Chassis frame. Transfers weight from Main Hopper to Chassis.

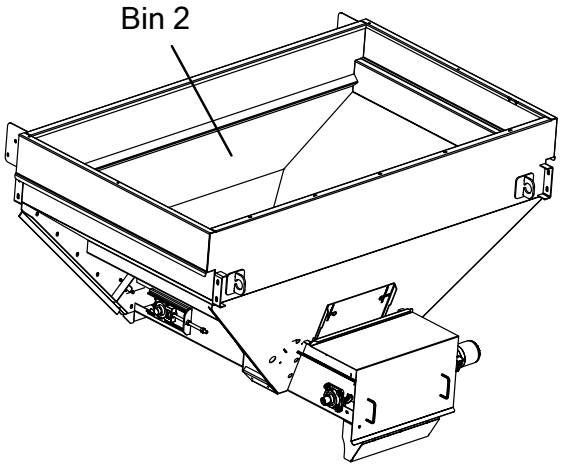
Bin 2

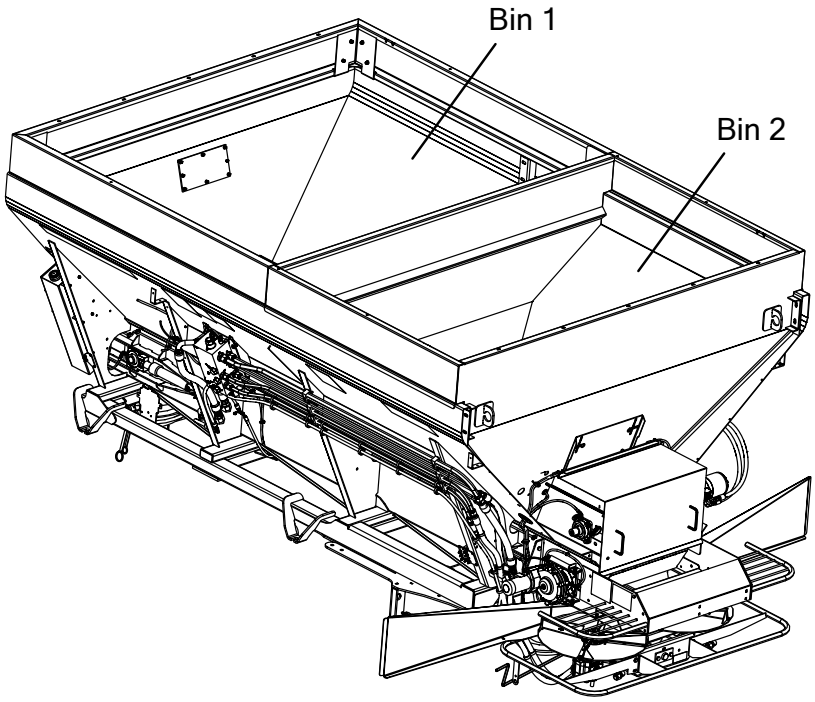
Bin 1
Bin 2

Introduction

MultiBin

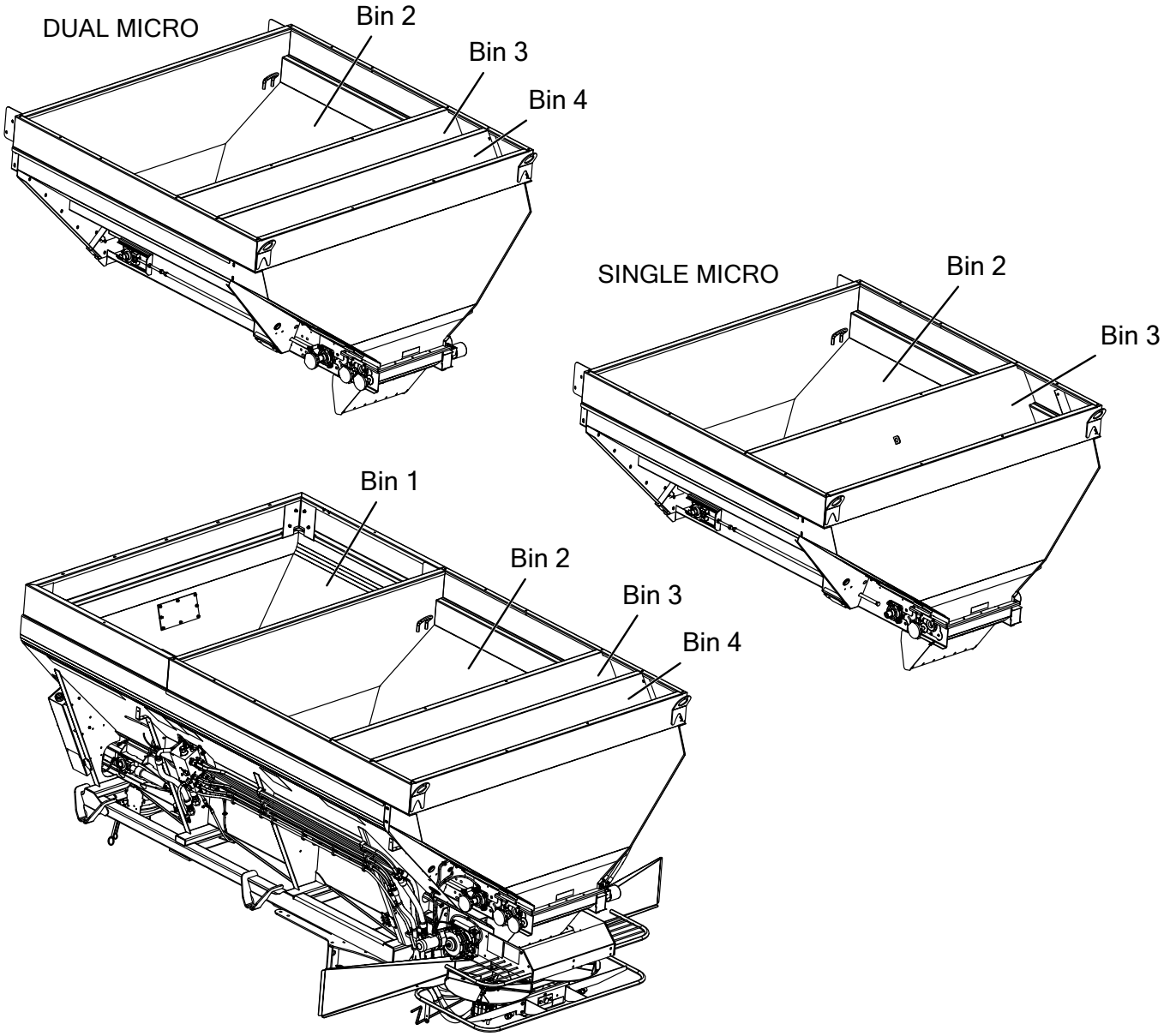

Dimensions & Capacities

Single Bin

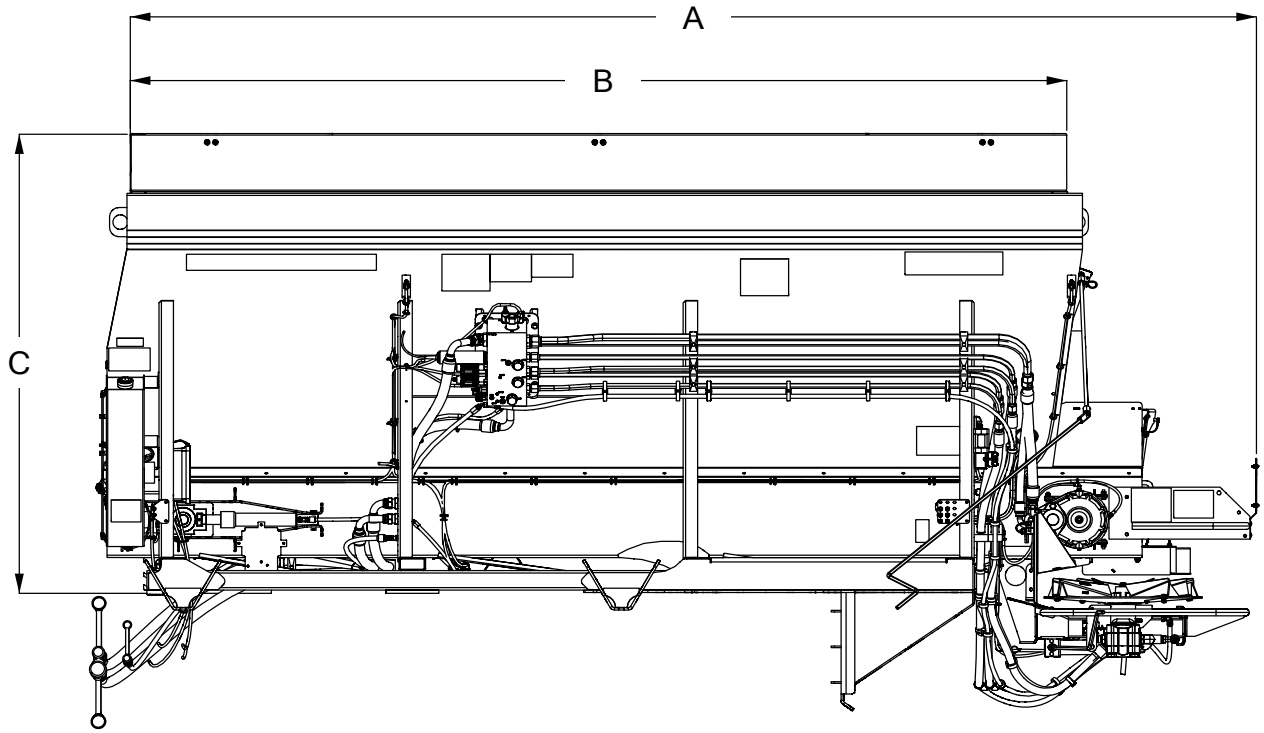

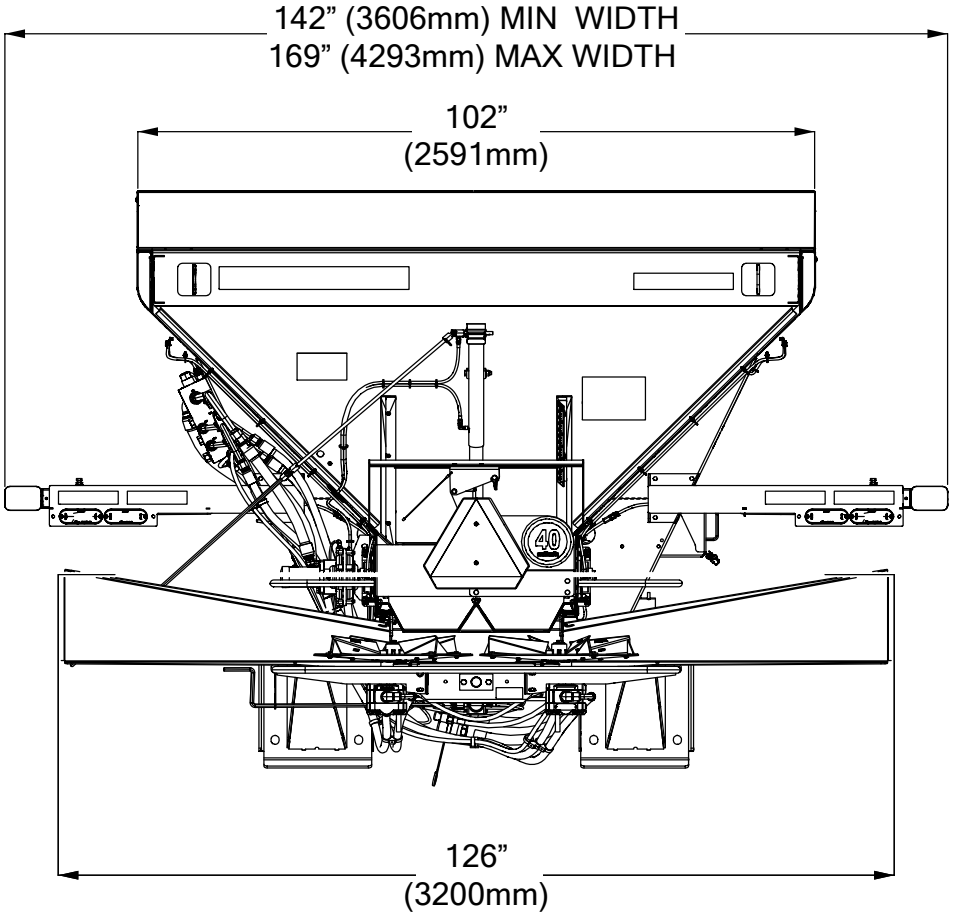

Dimensions & Capacities

Single Bin

SINGLE BIN WEIGHTS & CAPACITIES

Unit Length	Overall Length A	Inside Length B	Overall Height C	Approximate Weight Lbs (Kg)	Struck Capacity Cu Ft (Cu M)
12′ (3.66m)	172″ (4369mm)	141″ (3581mm)	71″ (1803mm)	4800 (2177)	330 (9.34)

IMPORTANT!	Consult federal, state, and local weight laws and chassis manufacturer's ratings to ensure neither government weight restrictions not GVWR and GAWR's are exceeded.

Dimensions & Capacities

MultApplier Complete

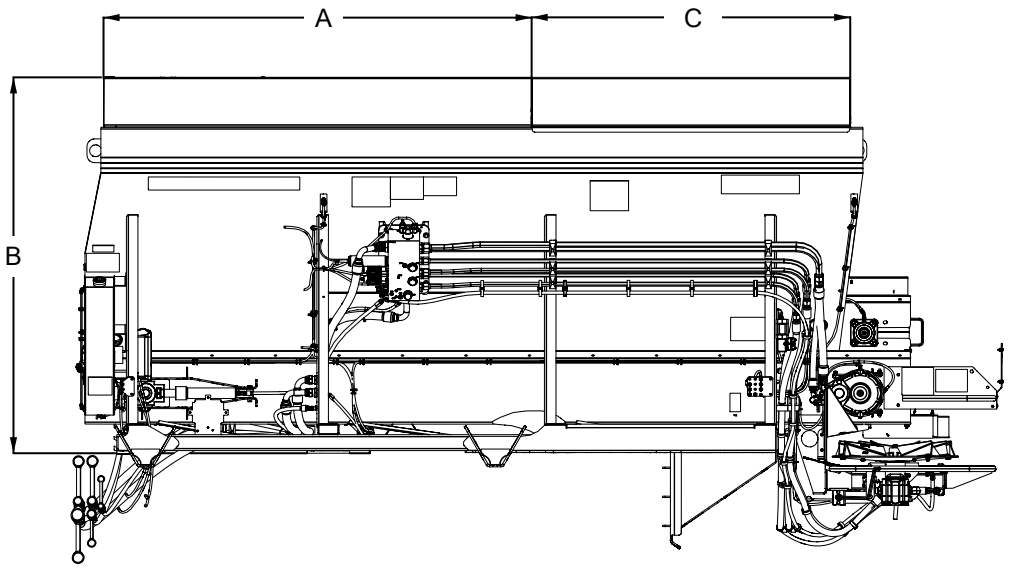

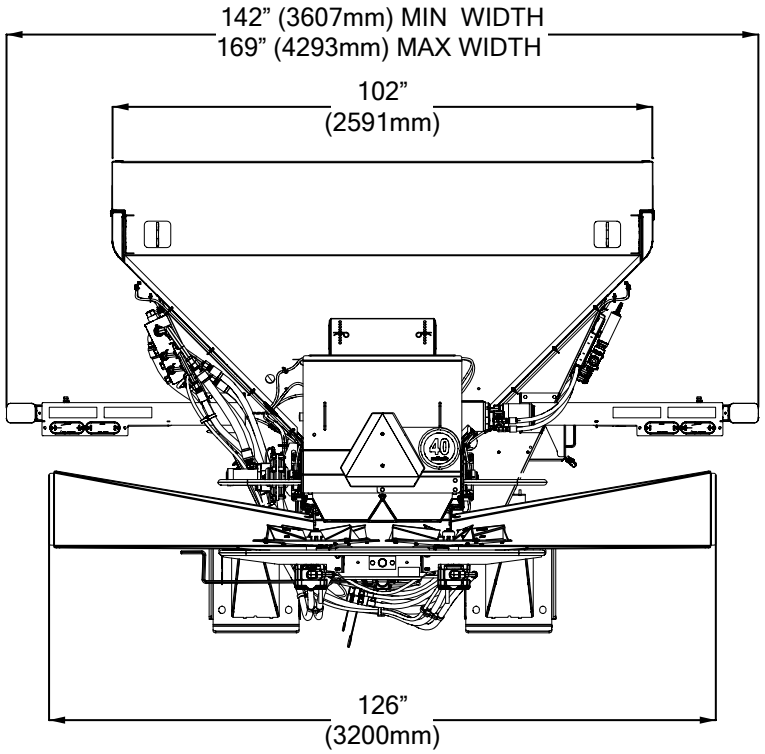

MULTAPPLIER COMPLETE WEIGHTS & CAPACITIES

MultApplier Length	Bin 1 Inside Length A	Overall Height B	Bin 1 Struck Capacity Cu Ft (Cu M)	Approximate Weight Lbs (Kg)
5′ (1.5m)	81″ (2057mm)	71″ (1803mm)	190 (5.38)	5300 (2404)
7′ (2.1m)	57″ (1448mm)		131 (3.71)	5500 (2495)

Dimensions & Capacities

MultApplier Complete

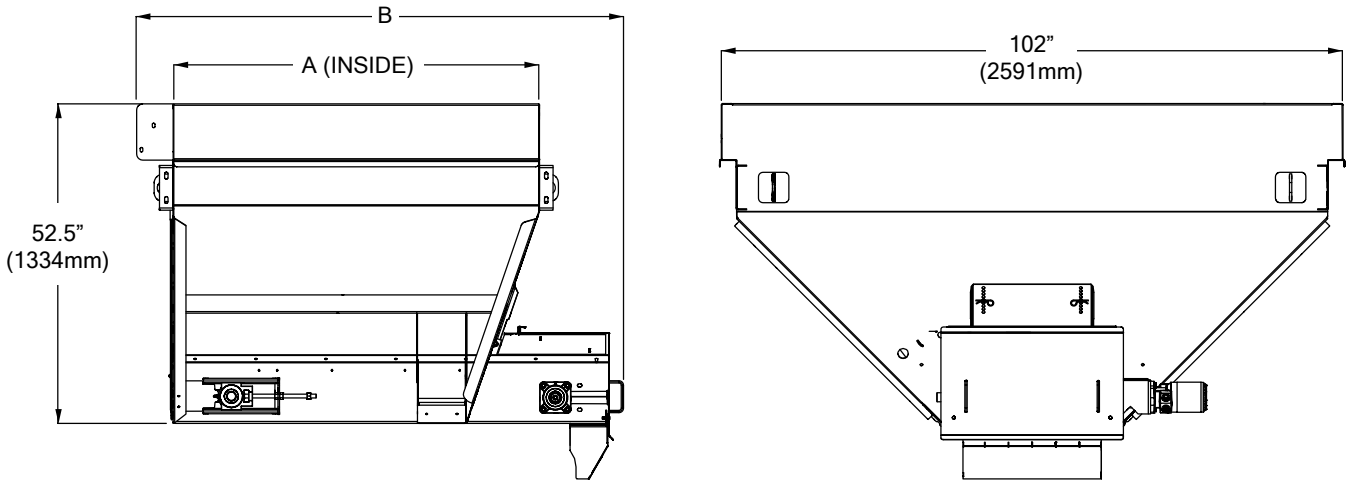

MULTAPPLIER ALONE DIMENSIONS & CAPACITIES

Insert Length	Inside Length A	Overall Length B	Approximate Weight Lbs (Kg)	Bin 2 Struck Capacity Cu Ft (Cu M)
5′ (1.5m)	60″ (1524mm)	80″ (2032mm)	1100 (499)	115 (3.25)
7′ (2.1m)	84″ (2133mm)	104″ (2642mm)	1300 (590)	161 (4.56)

Dimensions & Capacities

MultiBin Complete

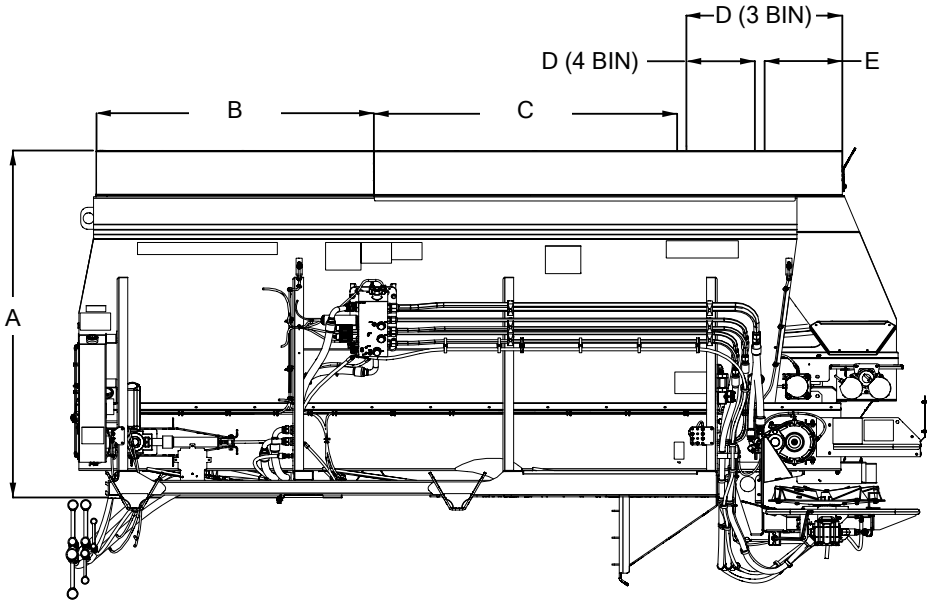

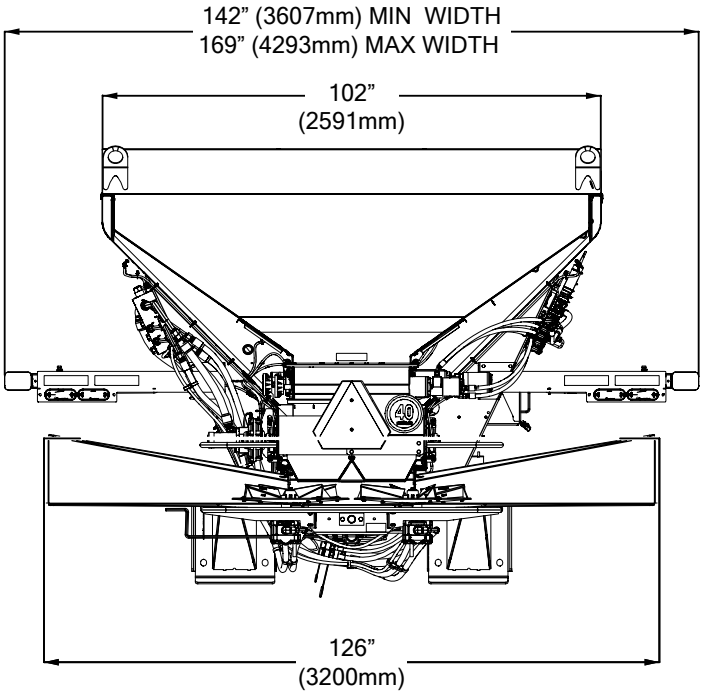

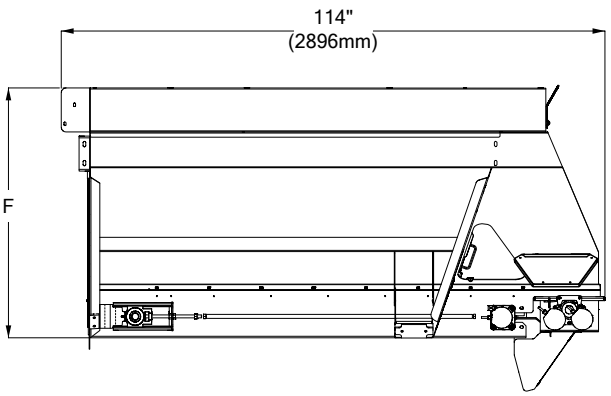

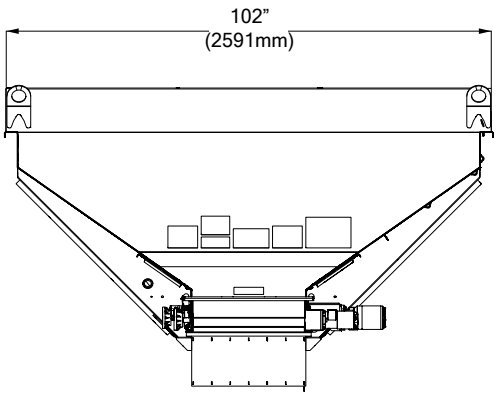

Dimensions & Capacities

MultiBin Complete

MULTIBIN ALONE DIMENSIONS & CAPACITIES

Insert Configuration	Bin 2 Inside Length C	Bin 3 Inside Length D	Bin 4 Inside Length E	Overall Height F
Single Micro	62″ (1575mm)	32″ (813mm)	--	52.5″ (1333mm)
Dual Micro		14″ (356mm)	15″ (381mm)	

Insert Configuration	Bin 2 Struck Capacity Cu Ft (Cu M)	Bin 3 Struck Capacity Cu Ft (Cu M)	Bin 4 Struck Capacity Cu Ft (Cu M)	Approximate Weight lbs (kg)
Single Micro	143 (4.05)	44 (1.24)	--	1700 (771)
Dual Micro		23 (.65)	21 (.59)	1900 (845)

MULTIBIN COMPLETE WEIGHTS & CAPACITIES

Insert Configuration	Overall Height A	Bin 1 Inside Length B	Bin 1 Struck Capacity Cu Ft (Cu M)	Approximate Weight Lbs (Kg)
Single Micro	71″ (1803mm)	57″ (1448mm)	131 (3.71)	6000 (2722)
Dual Micro				6100 (2767)

⚠WARNING Stand clear of moving machinery. Failure to comply with this requirement could result in death or serious injury.

NOTE: Do not load spreader with material.

1. Check entire unit to make sure all fasteners are in place and properly tightened per "Standard Torques" section in this manual.
2. Make sure no other persons are in vicinity of spreader.
3. Make sure no loose parts are in unit or on conveyor or spinner.
4. Check oil level in hydraulic reservoir; fill as necessary. Refer to "Lubricant & Hydraulic Oil Specifications" section of this manual for proper oil. Completely open reservoir valves.
5. Start engine and turn on hydraulics. Allow hydraulics to circulate until oil is warm.
6. Run spinner at 300 RPM. Allow to run until spinner is operating smoothly and all air has been purged from system.
7. Run conveyor at 20 RPM and spinner at 300 RPM. Run until conveyor is operating smoothly.
8. Run conveyor at 20 RPM and spinner at 700 RPM. Allow both conveyor and spinner to run until operating smoothly.
9. Enable boundary left and right and verify that RPM adjust accordingly.
10. Run conveyor at 0RPM and spinner at 0RPM. Make sure both conveyor and spinner do not move.
11. Calibrate spreader as defined in the manual for the controller that is supplied with your machine.
12. Complete spread pattern test per "Spread Pattern" section in this manual.
13. Shut system down.

⚠WARNING DO NOT check leaks with hands while system is operating as high pressure oil leaks can be dangerous! If skin is pierced with hydraulic fluid at high pressure seek immediate medical attention as fluid injected into the skin could cause gangrene if left untreated. Relieve pressure before disconnecting hydraulic lines or working system. Make sure all hydraulic fluid connections are tight and all hydraulic hoses and lines are in good condition before applying pressure to the system. Wear protective gloves and safety glasses or goggles when working with hydraulic systems. Failure to comply with this requirement could result in death or serious injury.

⚠WARNING DO NOT check for leaks adjacent to moving parts while system is operating as there may be danger of entanglement! Failure to comply with this requirement could result in death or serious injury.

Check all connections in hydraulic system to make sure there are no leaks.
Check hydraulic oil tank and refill to maintain level at mid-point of gauge.

Unit is now ready for field testing.

1. Make sure unit has been properly serviced and is in good operating condition. It is recommended to run the spreader prior to loading material to ensure acceptable operation.
2. Set manual machine settings in controller per Controller section in this manual.
3. Program controller with correct data for material and application.
4. Adjust feedgate to appropriate setting.
5. Adjust spinner to give spread pattern desired. See "Spread Pattern" and "Controller" sections for details. Calibrate and spread pattern test for any new material.
6. Fill unit with material to be spread.
7. Engage hydraulics.
8. Begin spreading.

⚠CAUTION Drive only at speeds which permit secure control of vehicle! Failure to follow this requirement may result in injury or machine damage.

NOTICE Change hydraulic oil filter after first week (or not more than 50 hours) of operation on a unit.

This page is intentionally left blank.

Preventative Maintenance Pays!

The handling and spreading of commercial fertilizers is a most severe operation with respect to metal corrosion. Establish a frequent, periodic preventative maintenance program to prevent rapid damage to spreading equipment. Proper cleaning, lubrication and maintenance will give you longer life, more satisfactory service and more economical use of your equipment.

⚠WARNING Shut off all power and allow all moving parts to come to rest before performing any maintenance operation. Failure to comply with this requirement could result in death or serious injury.

Hydraulic System

Proper oil in the hydraulic system is one of the most important factors for satisfactory operation. Utmost cleanliness in handling the oil cannot be stressed enough. Keep hydraulic oil in original closed containers, clean top of container before opening and pouring, and handle in extremely clean measures and funnels.

Refer to "Lubrication & Hydraulic Oil Specifications" on page 64 for selection of the proper hydraulic fluid for use in the hydraulic system.

Service Schedule

⚠WARNING DO NOT check leaks with hands while system is operating as high pressure oil leaks can be dangerous! If skin is pierced with hydraulic fluid at high pressure seek immediate medical attention as fluid injected into the skin could cause gangrene if left untreated. Relieve pressure before disconnecting hydraulic lines or working system. Make sure all hydraulic fluid connections are tight and all hydraulic hoses and lines are in good condition before applying pressure to the system. Wear protective gloves and safety glasses or goggles when working with hydraulic systems. Failure to comply with this requirement could result in death or serious injury.

⚠WARNING DO NOT check for leaks adjacent to moving parts while system is operating as there may be danger of entanglement! Failure to comply with this requirement could result in death or serious injury.

Check hydraulic oil daily by means of sight gauge on hydraulic tank. Add oil as necessary to maintain level around mid-point of sight gauge. Periodically inspect hoses and fittings for leaks.

NOTICE Change hydraulic oil filter after first week (or not more than 50 hours) of operation on a unit.

Controller will warn when filter is restricted. Change filter when warning sounds.

Drain hydraulic tank through drain plug (not through suction outlet), flush, and refill and change filter element annually. Oil and filter should also be changed whenever oil shows any signs of breaking down under continued high-pressure operation. Discoloration of oil is one sign of breakdown.

Hydraulic Hose

Hose assemblies in operation should be inspected frequently for leakage, kinking, abrasion, corrosion or other signs of wear or damage. Worn or damaged hose assemblies should be replaced immediately. When replacing, use hoses of same or better rating and construction.

⚠WARNING Testing should be conducted in approved test stands with adequate guards to protect the operator. Failure to comply with this requirement could result in death or serious injury.

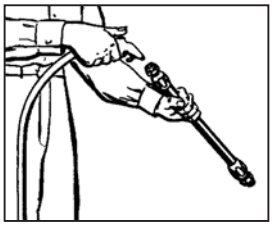

Clean
Clean assembly by blowing out with clean compressed air. Assemblies may be rinsed out with mineral spirits if the tube stock is compatible with oil, otherwise hot water at 150°F (65.55° C) maximum may be used. Ensure all are dry before assembly.

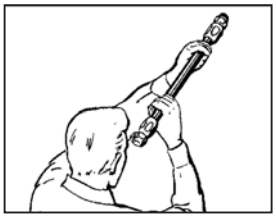

Inspect
Examine hose assembly internally for cut or bulged tube, obstructions, and cleanliness. For segment style fittings, be sure that the hose butts up against the nipple shoulder; band and retaining ring are properly set and tight, and segments are properly spaced. Check for proper gap between nut and socket or hex and socket. Nuts should swivel freely. Check the layline of the hose to be sure the assembly is not twisted. Cap ends of hose with plastic covers to keep clean.

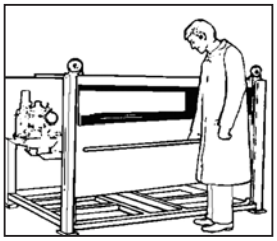

Test
The hose assembly should be hydrostatically tested at twice the recommended working pressure of the hose.
Test pressure should be held for not more than one minute and not less than 30 seconds. When test pressure is reached, visually inspect hose assembly for: 1. Any leaks or signs of weakness. 2. Any movement of the hose fitting in relation to the hose. Any of these defects are cause for rejection.

Storage and Handling

Hose should be stored in a dark, dry atmosphere away from electrical equipment, and the temperature should not exceed 90° F (32.22° C).

Conveyor Chain

⚠WARNING Stay out of the spreader. If it's necessary to enter the spreader, return to the shop, empty body, turn off all power, set vehicle brakes, lock engine starting switch and remove keys before entering. Tag all controls to prohibit operation. Tags should be placed, and later removed, only by person working in the body. Failure to comply with this requirement could result in death or serious injury.

Hose down unit and remove any material build-up on sprockets and under chain.

NOTICE The conveyor will move away from the bottom panel if material accumulates under the conveyor or on the sprockets. The more material that accumulates, the closer the chain will come to the chain shields. If the conveyor should catch a chain shield, it could permanently damage the conveyor, the chain shields or the unit. Do not remove material while conveyor or spinner is running!

Lubrication

Make sure unit is clean and completely dry. Lubricate conveyor chain at an interval of 10 hours of spreading, or at the end of each day of usage.

Tension

Proper chain tension is a factor in chain and sprocket life. Measuring from rear of unit, conveyor should touch at 36" - 40" (91 - 102cm) mark, and top of chain should appear between MIN and MAX lines in sight window (Figure 1). If manual adjustments need to be made, on valve block, loosen jam nut, turn counterclockwise to lower tension, or turn clockwise to increase tension (Figure 2). All tension adjustments must be made when machine is unloaded and conveyor running 15-20 RPM.

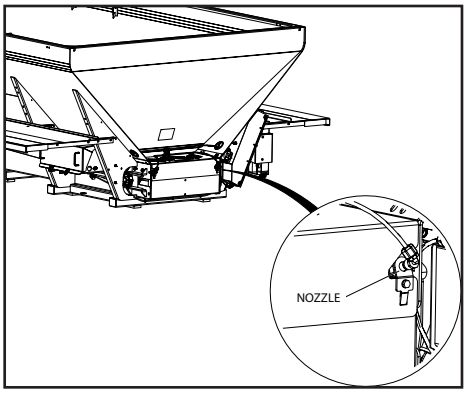

Figure 1

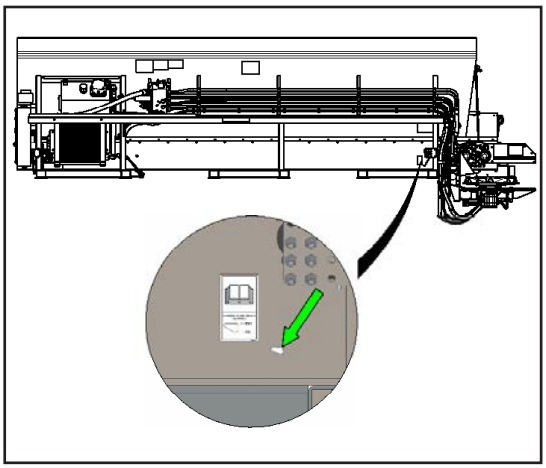

Figure 2A

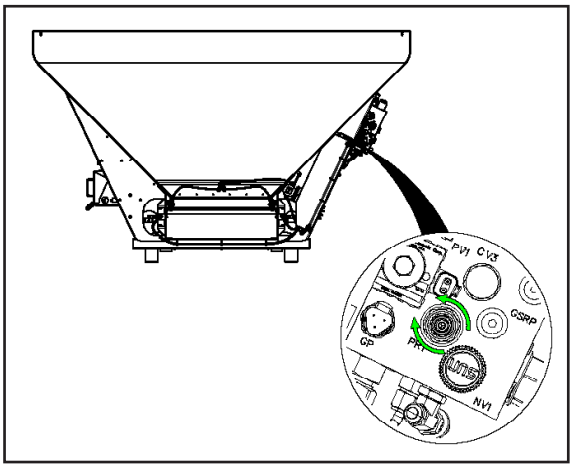

Figure 2B

Over-tensioning of conveyor chain will lead to excessive load on the system which will cause excessive chain and sprocket wear and can cause extremely high starting pressures. Under-tensioning allows conveyor chain to "wrap" around drive sprockets and not exit sprocket freely, causing excessive excessive chain stretch and surging of the conveyor which will result in interrupted flow of material to the spinners.

Proper Tension

Main Bin Conveyor
36" to 40"
(9144mm - 1016mm)

Bin 2 Conveyor
30" to 34"
(762mm - 864mm)

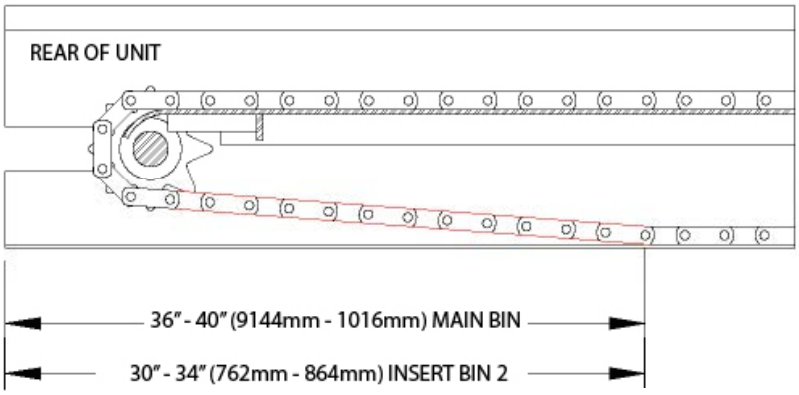

Conveyor Belt Maintenance

Standard belt for the #4 chain is moderate oil resistant that is impervious to moisture, weathering, or normal action which can be used with chemical impregnated fertilizer or oil based additives.

- Inspect belt fastener occasionally for wear or "raveling" of belt grip area.
- Make sure belt connecting pin is positioned correctly as shown in Figure 3.

NOTICE Pin must not rotate. If pin ends are not bent down and tight against lacing, the ends may cut into the chain shield sealers or belt wipers.

BOTH PIN ENDS MUST BE BENT DOWN & TIGHT AGAINST ENDS OF LACING

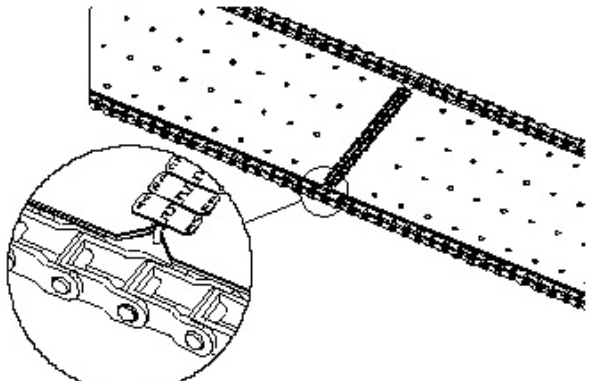

Figure 3 - Conveyor Belt Pin Installation

Bin Sensor

⚠WARNING Stay out of the spreader. Do not climb on spreader. Use a portable ladder to inspect, clean and maintain the bin sensor from outside the spreader. Failure to comply with this requirement could result in death or serious injury.

NOTICE Wipe sensor clean periodically to prevent accumulation of product. Avoid wet material as it may stick to sensor. If material sticks to sensor it won't warn user when bin is low.

Clean sensor with long handled brush or hose from outside of spreader. Do not aim high pressure sprayer directly at sensor—it could damage the components.

Replace MultiBin Metering Roller

⚠WARNING

Avoid serious injury from injection of pressurized hydraulic fluid. Always relieve pressure before servicing hydraulic system. Never open hydraulic lines under pressure. Escaping fluid under pressure can penetrate the skin. Lockout/tagout all components before any maintenance or troubleshooting is attempted. Failure to comply with this requirement could result in inadvertent activation of equipment resulting in death or serious injury.

1. Remove hardware (1) and Top Plate (2).

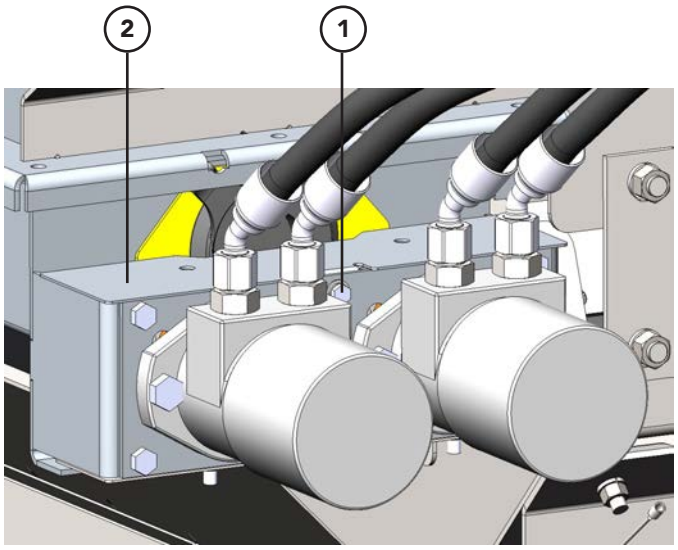

2. Brake Chains (3) and remove.

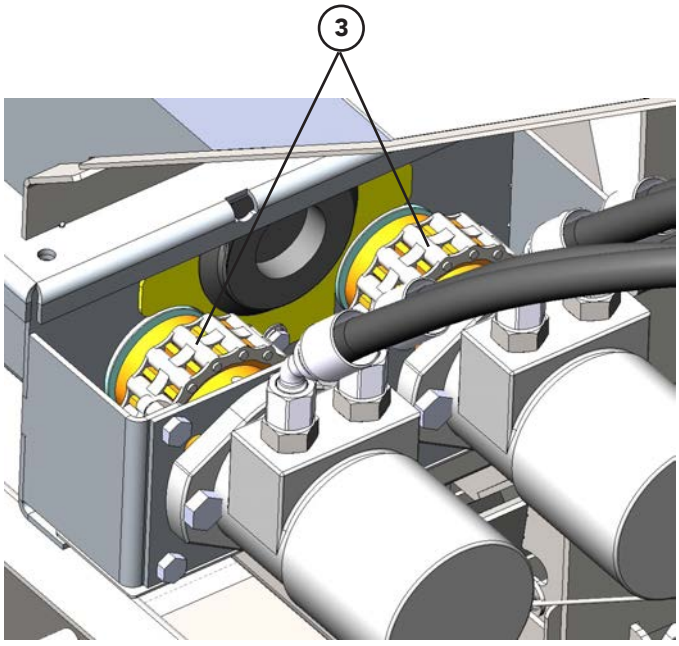

3. Remove hardware (4) and Motors (5).

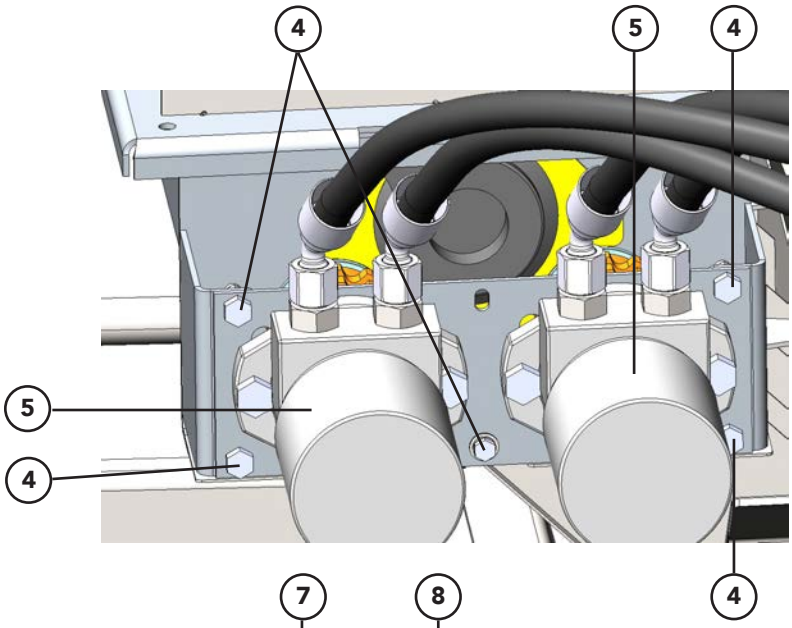

4. Remove hardware (6), Retainer Cover (7) and inspection plug (8).

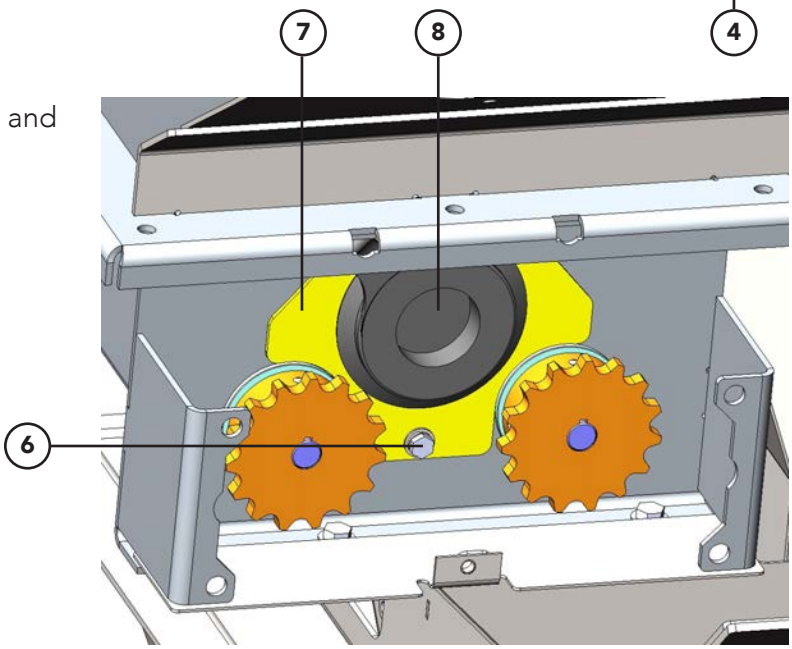

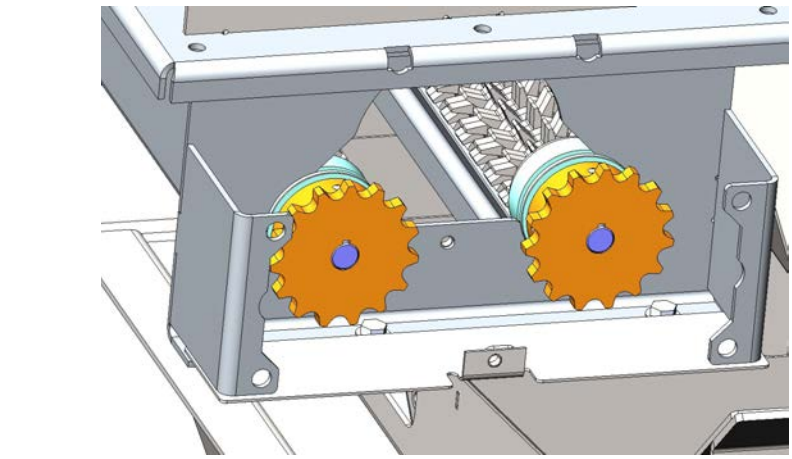

5. Remove Cotter Pins from Studs (9).

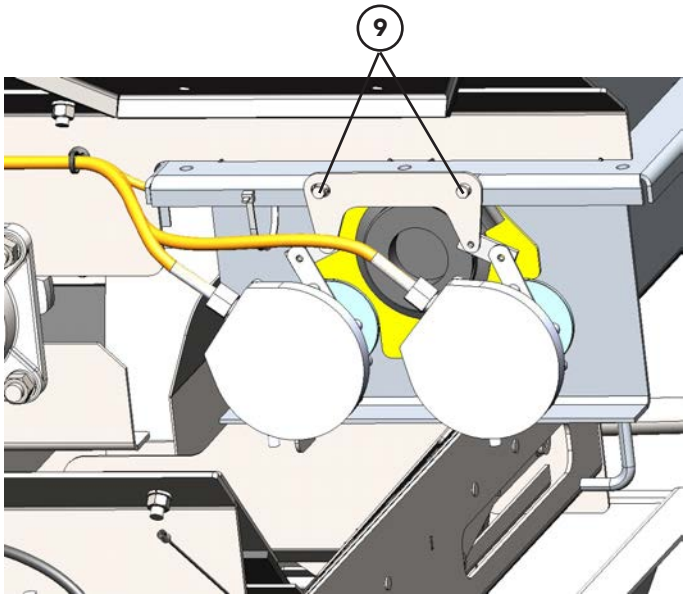

6. Remove Set Screws (10) and Encoders (11).

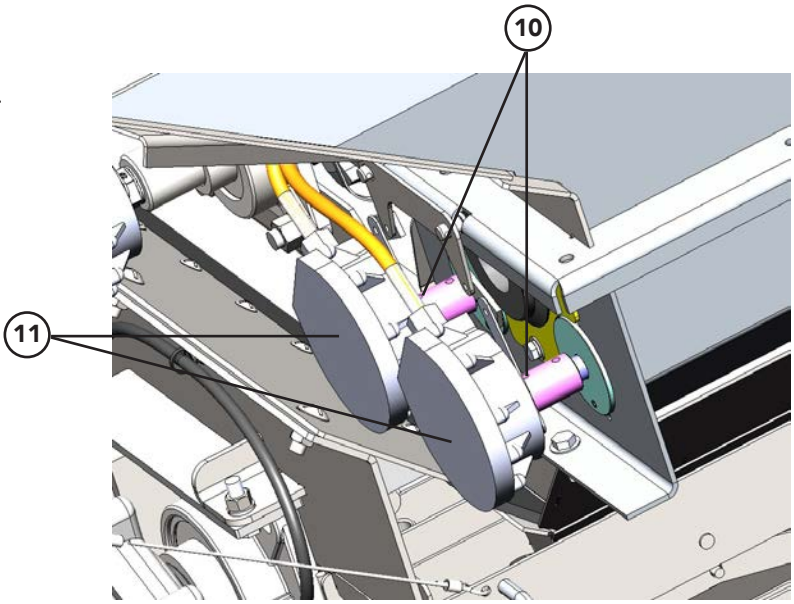

7. Remove hardware (12), Retainer Cover (13) and inspection plug (14).

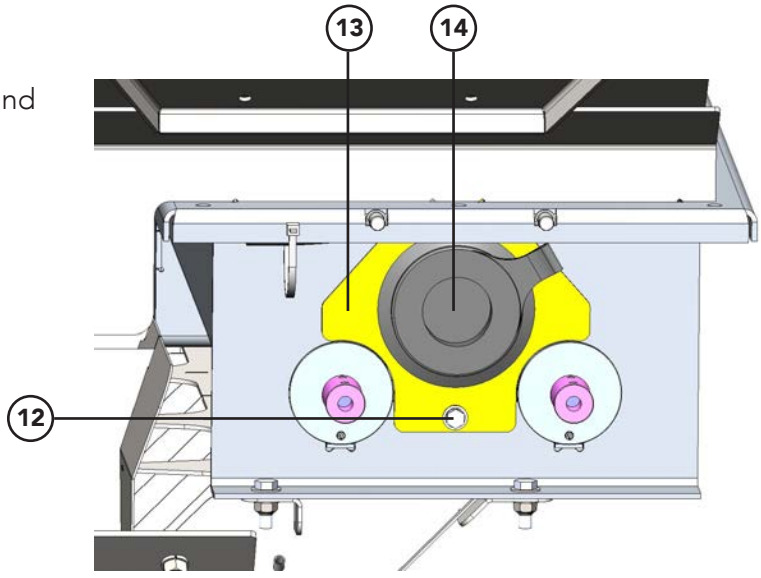

8. Lift Roller Assemblies (15) up and inward to pull out.
9. Install parts in reverse order using the following special instructions:

   • Ensure Groove (16) is placed correctly on Plate (17).

   • Ensure Cover (18) is placed correctly in groove.

   • Ensure all hardware is torqued to proper specification.

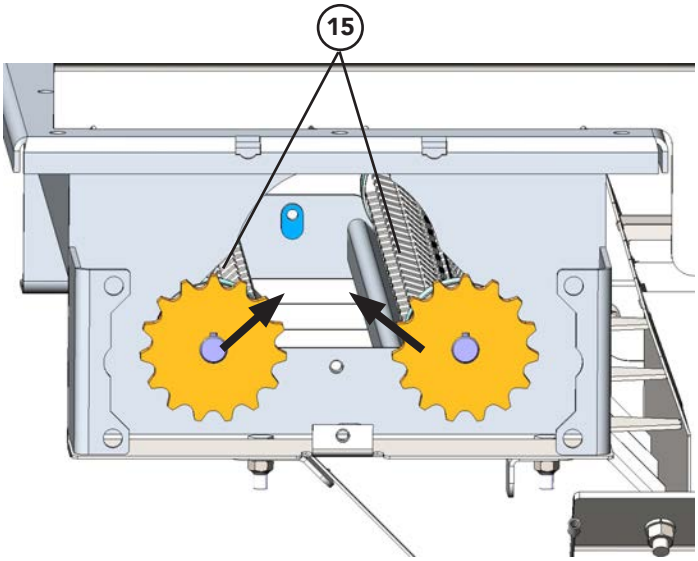

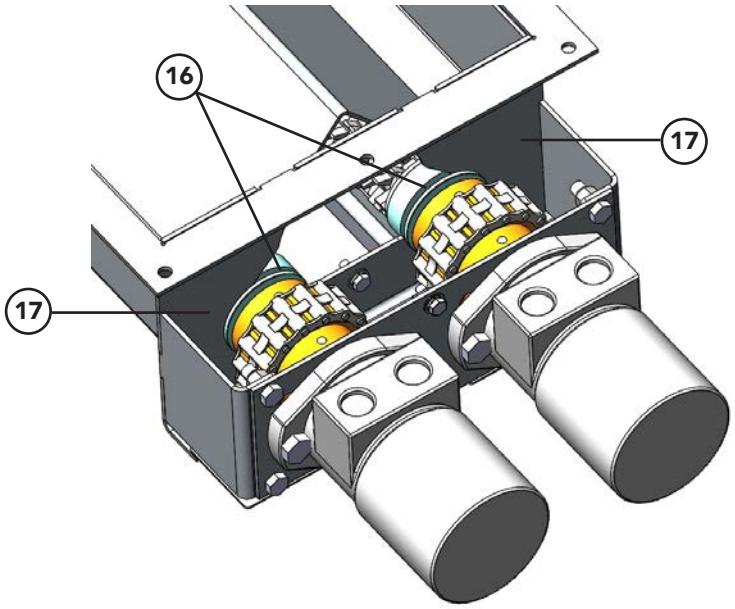

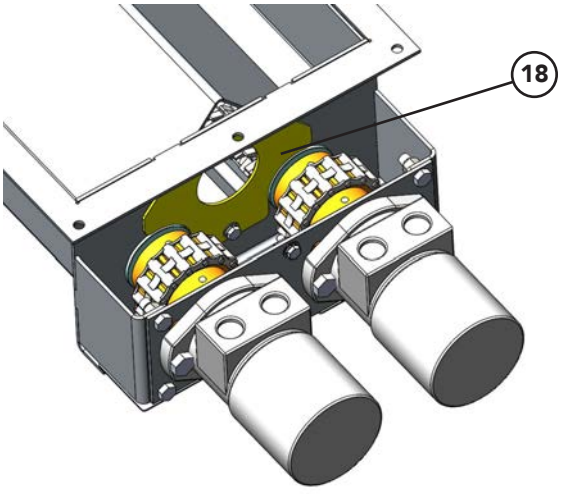

Spinner Fins

Visually inspect spinner fins (Figure 4) daily for build-up of material and wear. Spinner discs and fins must be kept clean and polished. Even a small build-up of material on a spinner can significantly affect the spread pattern. Rough, bent or worn fins will produce bad spread patterns. Replace worn fins or discs as needed. See Fin Kit Installation Instructions for replacement part numbers and instructions.

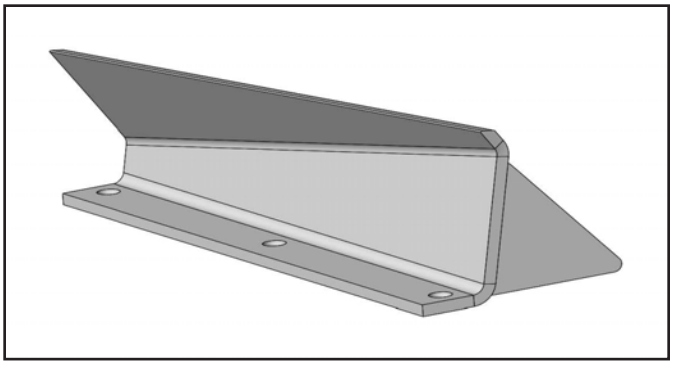

Spinner Fin

Spinner Deflectors

Visually inspect spinner deflectors (Figure 5) daily for build-up of material and damage. Clean as needed. Even a small build-up of material on a spinner deflector can affect the spread pattern. If damaged, bent or otherwise, replace. See Parts List in this manual for replacement part numbers.

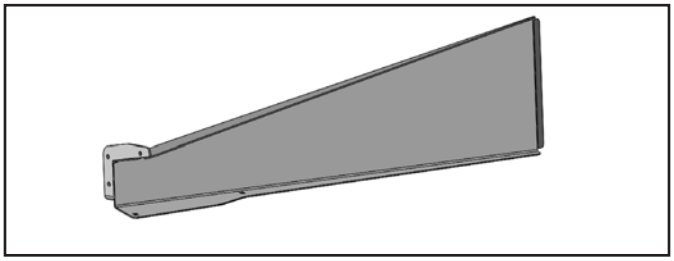

Spinner Deflector

Material & Hillside Flow Dividers

Visually inspect material divider (Figure 6) and hillside flow dividers (as equipped) daily for build-up of material and wear. Any build-up of material on divider components can affect performance. Clean as needed. Replace worn or damaged parts as necessary. See Parts List in this manual for replacement part numbers.

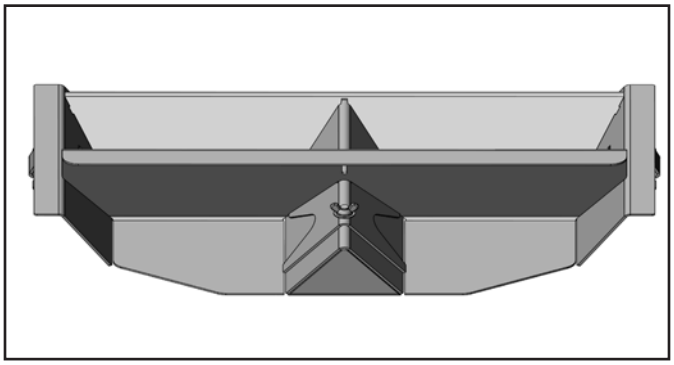

Material Divider

Conveyor Gearcase

Drain oil in a new unit after first two weeks (or not more than 100 hours) of operation, and flush gear case thoroughly with light oil. Refer to "Lubricant and Hydraulic Oil Specifications" section for proper grade oil and recommended amounts of lubricant. After initial change, oil should be changed every 2,000 hours of operation or annually, whichever occurs first.

Check gearcase oil level monthly.

Lubrication of Bearings

Grease in a bearing acts to prevent excessive wear of parts, protects ball races, and balls from corrosion and aids in preventing excessive heat within the bearing. It is very important the grease maintain its proper consistency during operation. It must not be fluid and it must not channel.

Make sure all fittings are thoroughly cleaned before grease is injected. Points to be lubricated by means of a grease gun have standard grease fittings.

Lubricate bearings by pumping grease slowly until it forms a slight bead around the seals. This bead indicates adequate lubrication and also provides additional protection against the entrance of dirt.

Fasteners

Tighten all screws fasteners to recommended torque's after first week of operation and annually thereafter. If loose fasteners are found at anytime, tighten to recommended torque. Replace any lost or damaged fasteners or other parts immediately. Check body mounting hardware every week.

Clean Up

NOTICE High pressure wash can inject water and/or fertilizer into control components, causing damage. Use caution when cleaning these areas.

Thoroughly wash unit every two to three days during the operating season to maintain minimal maintenance operation. Hose unit down under pressure to free all sticky and frozen material.

It is important the unit be thoroughly cleaned at the end of each operating season. All lubrication and maintenance instructions should be closely followed. Repaint worn spots to prevent formation of rust.

NOTICE

The lubricant distributor and/or supplier is to be held responsible for results obtained from their products. Procure lubricants from distributors and/or suppliers of unquestionable integrity, supplying known and tested products. Do not jeopardize your equipment with inferior lubricants. No specific brands of oil are recommended. Use only products qualified under the following oil viscosity specifications and classification recommended by reputable oil companies.

Hydraulic System

Use premium quality lubricants with 100-200 SUS or 20-43 cSt viscosity at operating temperatures. The hydraulic fluid's specifications in the table below are for normal operating conditions. Extreme environments or dirty conditions may require the use of different oils. Consult your New Leader dealer or the Product Support Department at Highway Equipment Company for systems operating outside normal conditions.

Ideal Oil Operating Temperature	115-158°F (46.11-70° C)
Recommended Premium Lubricant	Multi-Purpose Agriculture Hydraulic & Transmission Oil
Lubricant Specifications Viscosity Index Viscosity at 40°C, cst Viscosity at 100°C, cst	 Greater than 130 Less than 68 Greater than 9
Acceptable Fluid Example	Mobil 424

Gearcase Lubricant

Lubricate these assemblies with non-corrosive type extreme pressure (E.P.) gear oil conforming to MIL-L2105 B multi-purpose gear lubricating oil requirements (API Service GL 4) based on ambient temperatures listed below. Refill gearcase with one and a half (1-1/2) pints (.70 liters) of recommended lubricant.

Ambient Temperature	Oil Type
Below 40°F (4.4°C)	SAE 80 E.P.
40° - 100° F (4.4° - 38° C)	SAE 90 E.P.
Above 100° F (38° C)	SAE 140 E.P.

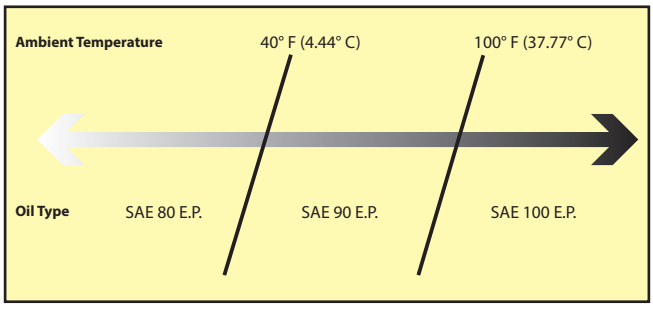

Grease Gun Lubricant

Use a waterproof ball and roller bearing lithium base lubricant with a minimum melting point of 300°F (148.8° C). This lubricant should have a viscosity which assures easy handling in the pressure gun at prevailing atmospheric temperatures. The grease should conform to NLGI No. 2 consistency.

Chain Oiler Mixture

Use a mixture of 75% diesel fuel mixed with 25% SAE 10 engine oil (use clean oil, not pre-used oil).

Lubrication & Maintenance Chart

⚠WARNING Shut off all power and allow all moving parts to come to rest before performing any maintenance operation. Failure to comply with this warning could result in death or serious injury.

The spreader should be regularly lubricated with the lubricants recommended in this manual in accordance with the following chart:

Location	Places	Method	Frequency
Hydraulic System			
Hydraulic Reservoir	1	Check Daily.	Change Annually
Filter	1	Check daily; controller	Change when indicated by
Conveyor			
Idler Bearings (Front Bank)	2	Grease Gun	Weekly
Driveshaft Bearings (Rear Bank)	2		
Idler Take-Up Screws	2	Hand Grease	
Chain Oiler	1	Oil Mixture	Daily, After first 10 hours spreading
Gearcase	1	Gear Oil	Check Monthly; Change Annually
Feedgate			
Jack Assembly (Rear Bank)	2	Grease Gun	Weekly
Spinner Assembly			
Jack Assembly (Rear Bank)	2	Grease Gun	Weekly
Bin 2 Insert Conveyor			
Idler Bearings (Rear Bank)	2	Grease Gun	Weekly
Driveshaft Bearings (Rear Bank)	2		
Idler Take -Up Screws	2	Hand Grease	Annually

NOTE: Unusual conditions, such as excessive dust, temperature extremes or excessive moisture may require more frequent lubrication of specific parts.

*See "Lubricant and Hydraulic Oil Specifications" for types of lubricants and oil to be used.

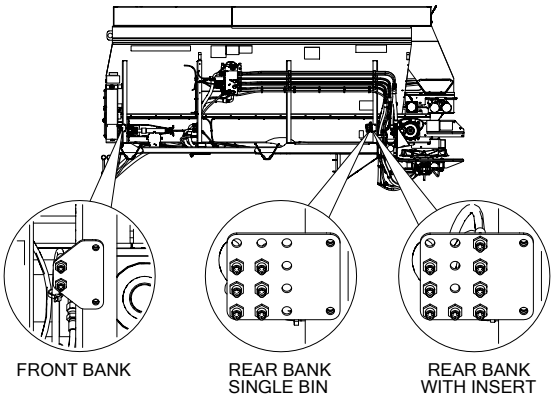

Figure 1 - Spreader Grease Banks

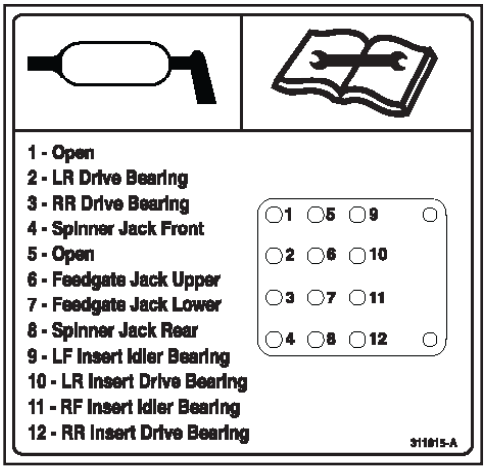

Figure 2 - Rear Grease Bank Decal

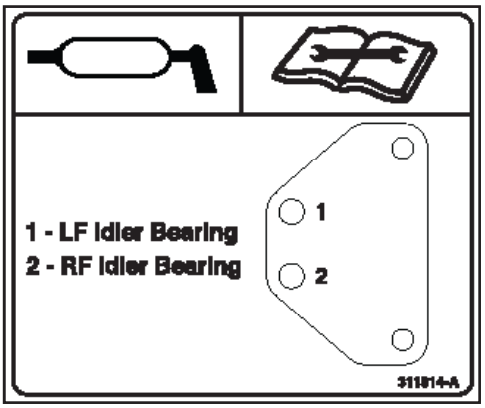

Figure 3 - Front Grease Bank Decal

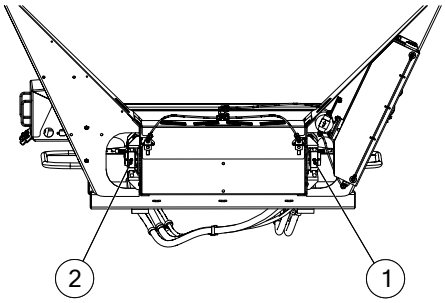

Figure 4 - Front Grease Bank Locations

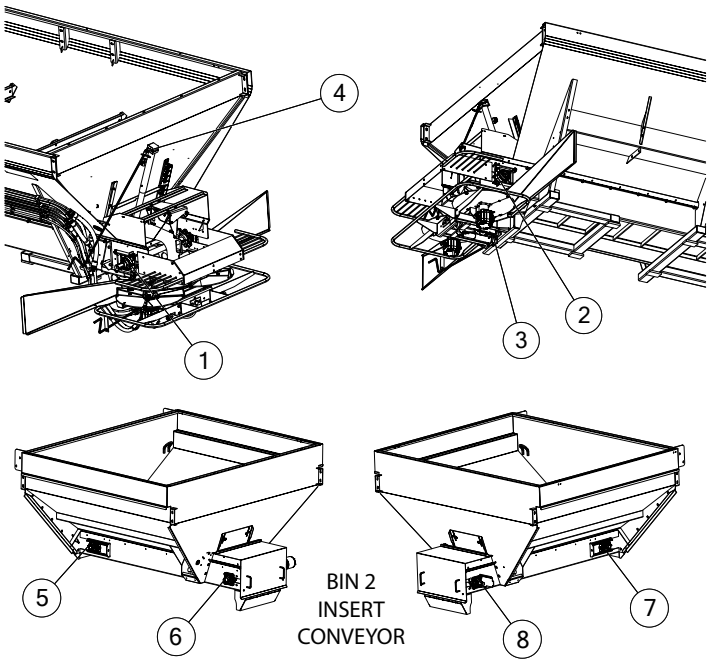

Figure 5 - Rear Grease Bank Locations

Symptom:	Reason:	Correction:
Spinner will not run	Defective Spinner Control Valve	Replace spinner control valve cartridge and coil.
	No voltage at valve	Verify spinner switch is on.
		Verify spinner enable is checked.
		Verify controller has a target spinner RPM entered.
		Check WSM 7.5 amp fuse is not blown.
		Verify spinner control harness is not damaged.
		Verify system was configured as Basic independent.
	No hydraulic flow	Verify hydraulics are on.
		Pressure test pump - replace as needed.
		System is going over relief - test & replace as needed.
Spinner will not shut off	Defective spinner control valve	Replace spinner control valve cartridge.
	Control valve is manually overrode	Loosen jam nut on control valve cartridge and back set screw out until spinner stops.
Spinner runs erratic	Defective spinner control valve	Replace spinner control valve cartridge.
	Spinner speed sensor harness failure	Replace sensor harness.
	Spinner speed sensor not properly installed	Adjust sensor so that gap between sensor and fin mounting bolt is less than 1/8".
Spinner speed drops off when turning around	Improper control settings	Verify PWM control is set properly (HOLD for gear pumps, CONTROL for variable displacement).
Spinner speed does not hit target	Defective spinner control valve	Replace spinner control valve cartridge.
	Pump failure	Flow and pressure test pump.
	Spinner speed sensor not properly installed	Adjust sensor so that gap between sensor and fin mounting bolt is less than 1/8".
	Hydraulic flow dropping off	Adjust settings and speed. Pressure test relief (adjust or replace as needed).
	Spinner speed sensor harness failure	Replace sensor harness.
	Spinner speed sensor failure	Replace spinner speed sensor.
Bin will not hit target rate	Defective conveyor cartridge	Replace conveyor control valve cartridge.
	Pump failure	Flow and pressure test pump.
	Going over relief	Adjust setting and speed. Pressure test relief (adjust or replace as needed).
	Encoder failure	Replace encoder.
	Encoder harness failure	Replace harness.
Cooler Fan failure	No power at fan	Verify FAN 30-amp fuse is not blown. Verify relay is working properly.
	Fan failure	Replace fan.

Symptom:	Reason:	Correction:
Conveyor will not run	Defective conveyor control valve	Replace conveyor valve cartridge.
	No voltage at valve	Verify bin switch and master switches on.
		Verify in controller that target rate, density, ground speed and a CFR number are all entered.
		Check WSM 7.5 amp fuse is not blown.
		Verify conveyor control harness is not damaged.
	No hydraulic flow	Verify hydraulics are on.
		Pressure test pump - replace as needed.
		System is going over relief - test & replace as needed.
		Conveyor is going over relief - test & replace as needed.
Conveyor will not shut off	Defective conveyor cartridge	Replace conveyor control valve cartridge.
	Control valve is out of time	Adjust cartridge timing.
Conveyor runs erratic	Defective conveyor cartridge	Replace conveyor control valve cartridge.
	Encoder failure	Replace encoder.
	Encoder harness failure	Replace harness.
	Rates smooting is disabled	Enable rate smoothing.
Hydraulics over-heating	Pump failure	Flow and pressure test pump.
	Too much flow	Flow test pump.
	System relief	Pressure test relief (adjust or replace as needed). Adjust settings and speed.
	Conveyor valve relief	Pressure test relief (adjust or replace as needed). Adjust settings and speed.
	Oil cooler fan failure	see cooler fan failures.
	Case drain on mono valve is plugged.	Case drain requires zero pressure line back to tank.
No warnings being displayed	Warnings are only shown when VT screen is active on monitor	Switch from viewing map to viewing VT.
Bin level sensors not working properly	Not enabled	Verify system was configured with bin level snesors installed.
	Bin level sensor failure	Replace sensor.
	Bin level sensor harness failure	Replace harness.
Not applying correct rate	Incorrect settings	Verify density, swath width, gate opening, encoder pulses, and CFR number are all adjusted as needed.
No ground speed	Manual speed is enabled, but set to 0	Enter correct speed or disable manual speed
	AUX broadcast speed is enabled but radar not installed	Disable broadcast AUX speed.
	Incorrect speed source is selected	Select correct speed source.
Conveyor tensioning incorrect	Cartridge isn't adjusted properly	Adjust valve to achieve correct tension.
	Cartridge has failed	Replace cartridge.

SPREADER MODULE LED LIGHT ALERTS

Power LED

	Off	Solid Red ●	Flashing Red ● ● ● ●	Solid Amber ●	Flashing Amber ● ● ● ●	Solid Green ●	Flashing Green ● ● ● ●
Boot	No Power	N/A	No App	Running	N/A	N/A	N/A
Upgrage		N/A	N/A	N/A	Running	N/A	
Main Application		High Current Power Low	N/A	N/A	N/A	Power OK	

ISO CAN LED

	Off	Solid Red ●	Flashing Red ● ● ● ●	Solid Amber ●	Flashing Amber ● ● ● ●	Solid Green ●	Flashing Green ● ● ● ●
Boot	X	N/A	N/A	N/A	N/A	N/A	N/A
Upgrage	Idle	Bus Off		Bus Error Passive	Bus Error Active		TX / RX
Main Application							TX / RX

Proprietary CAN LED

	Off	Solid Red ●	Flashing Red ● ● ● ●	Solid Amber ●	Flashing Amber ● ● ● ●	Solid Green ●	Flashing Green ● ● ● ●
Boot	X	N/A	N/A	N/A	N/A	N/A	N/A
Upgrage	X	N/A		N/A	N/A		N/A
Main Application	Idle	Bus Off		Bus Error Passive	Bus Error Active		TX / RX

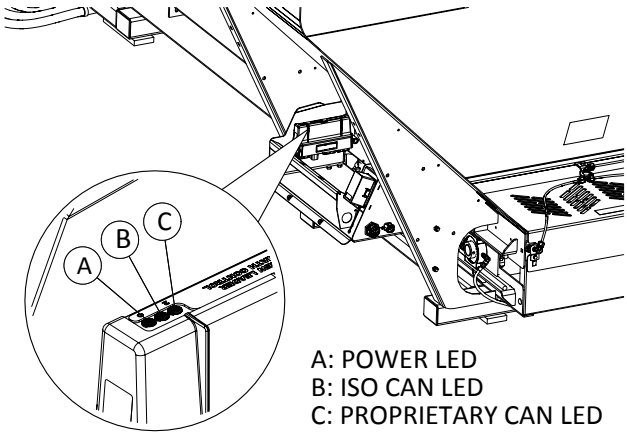

A: POWER LED
B: ISO CAN LED
C: PROPRIETARY CAN LED

Standard Torques

CAP SCREW GRADE IDENTIFICATION - MARKINGS ON HEAD

SAE GRADE 2 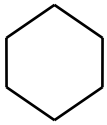 NO MARKINGS

SAE GRADE 5 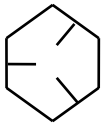 THREE MARKS - 120 DEGREES APART

SAE GRADE 8 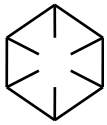 SIX MARKS - 60 DEGREES APART

USE GRADE 2 TORQUES FOR STAINLESS STEEL FASTENERS AND CARRIAGE BOLTS.

	TORQUE - FOOT-POUNDS					
CAP SCREW SIZE	GRADE 2		GRADE 5		GRADE 8	
	DRY	LUBE	DRY	LUBE	DRY	LUBE
1/4″	5	4	8	6	12	9
5/16″	11	8	17	13	25	18
3/8″	20	15	30	23	45	35
7/16″	30	24	50	35	70	55
1/2″	50	35	75	55	110	80
9/16″	65	50	110	80	150	110
5/8″	90	70	150	110	220	170
3/4″	100	120	260	200	380	280
7/8″	140	110	400	300	600	460
1″	220	160	580	440	900	650

IMPORTANT!	Do not operate or work on machine without reading and understanding the operator's manual.

Before starting engine/before starting machine operation

___ Program rate controller and document settings
___ All stop, tail, and turn lights function properly
___ Tire pressures are equal on each side of chassis
___ Battery condition and connection
___ Electrical connections are tight and secure
___ All fasteners are secure
___ Inverted V is secure and installed properly
___ Sensor(s) are functioning properly
___ Lubricate all grease fittings
___ Hydraulic oil level and line connections are tight
___ Hydraulic filters are current and gauge is functional
___ Chain oiler tank is full and operates correctly
___ Hydraulic hoses are secured properly
___ Gearcase oil level is correct
___ All guards and shields in place
___ Spinner assy moves through full range of operation
___ Spinner discs and fins installed properly
___ Spinner discs and fins are in acceptable condition
___ Material Divider assembly is square and secure
___ Material Divider is clean of build-up
___ Feedgate assembly is level and clean of build-up
___ Encoder installed and secured
___ Spinner sensor adjusted to proper gap

Start engine/Start and run to operational temperatures

___ Hydraulic fittings are tight and no leaks *
___ All pressure transducers are operating correctly
___ Check operation of all alarms
Hydraulic flow test: ____GPM @ operating engine RPM
___ Check main relief valve setting :_____ PSI
___ Conveyor control valve is operating correctly
___ Calibrate radar/ground speed input
___ Test maximum conveyor RPM's
Test right and left hand spinner speed; ensure difference is less than 5 RPM (when at operating RPM)

Stop operation/Turn off engine and engage parking brake

___ Visually check for leaks
___ Check belt/chain tension and alignment
___ All oil levels full

Perform Calibrations

___ Product density testing, crush strength, and SGN scale (See Spread Pattern Calibration section for instructions).
___ Catch tests of all products and at least 1 blend for conveyor calibration and document settings and product characteristics
___ Spread pattern tests of all products and at least 1 blend and document settings and product characteristics

End of Season

___ Empty unit of all material
___ Sand and touch-up paint as necessary
___ Wash chain conveyor, lube thoroughly when dry
___ Check spinner discs and fins for wear
___ Clean unit inside and out
___ Check for leaks
___ Lubricate all grease fittings
___ Ensure all fasteners are secure

The following pages contain representative hydraulic schematics and flow diagrams for the NL4500G4 CNH Trident model spreader.

Hydraulic Components

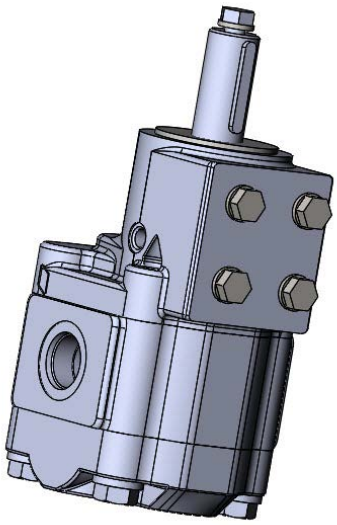

Spinner Motor

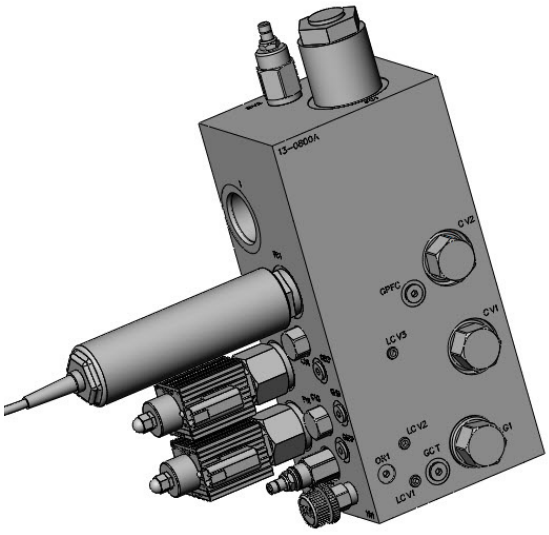

Valve Block - Face

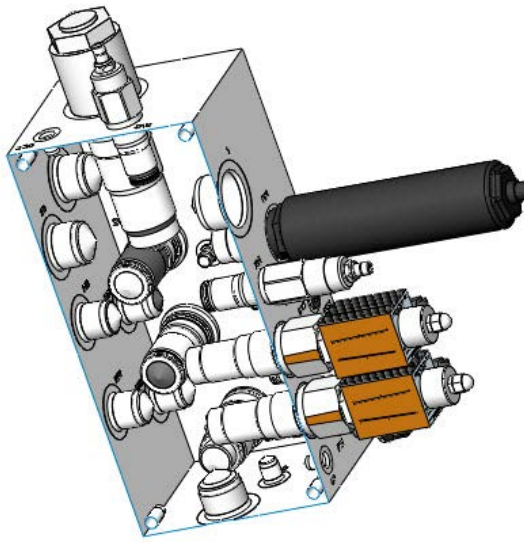

Valve Block - Rear (cut-away)

Hydraulic Schematic

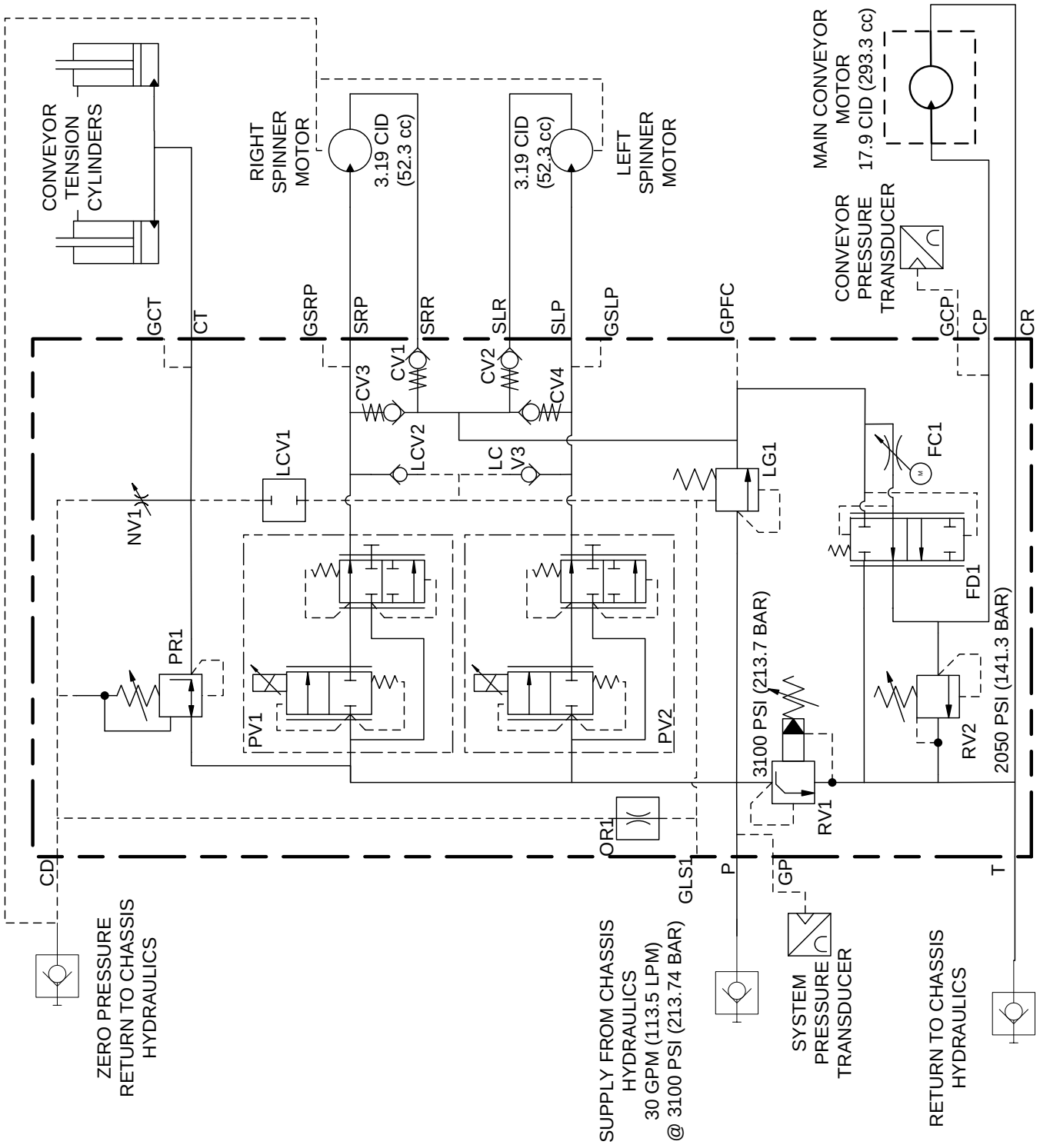

Flow Diagram

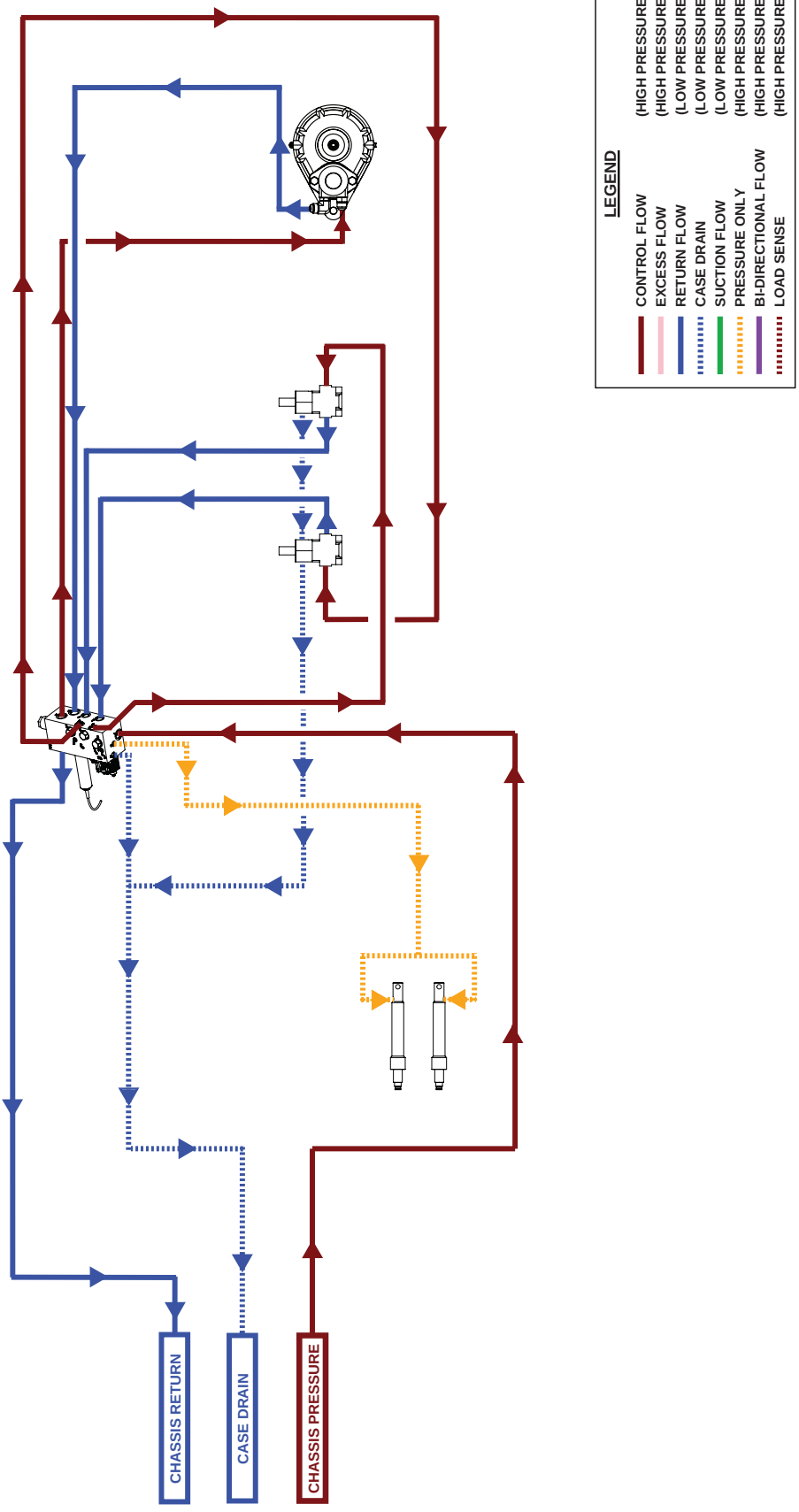

Hydraulic Schematic

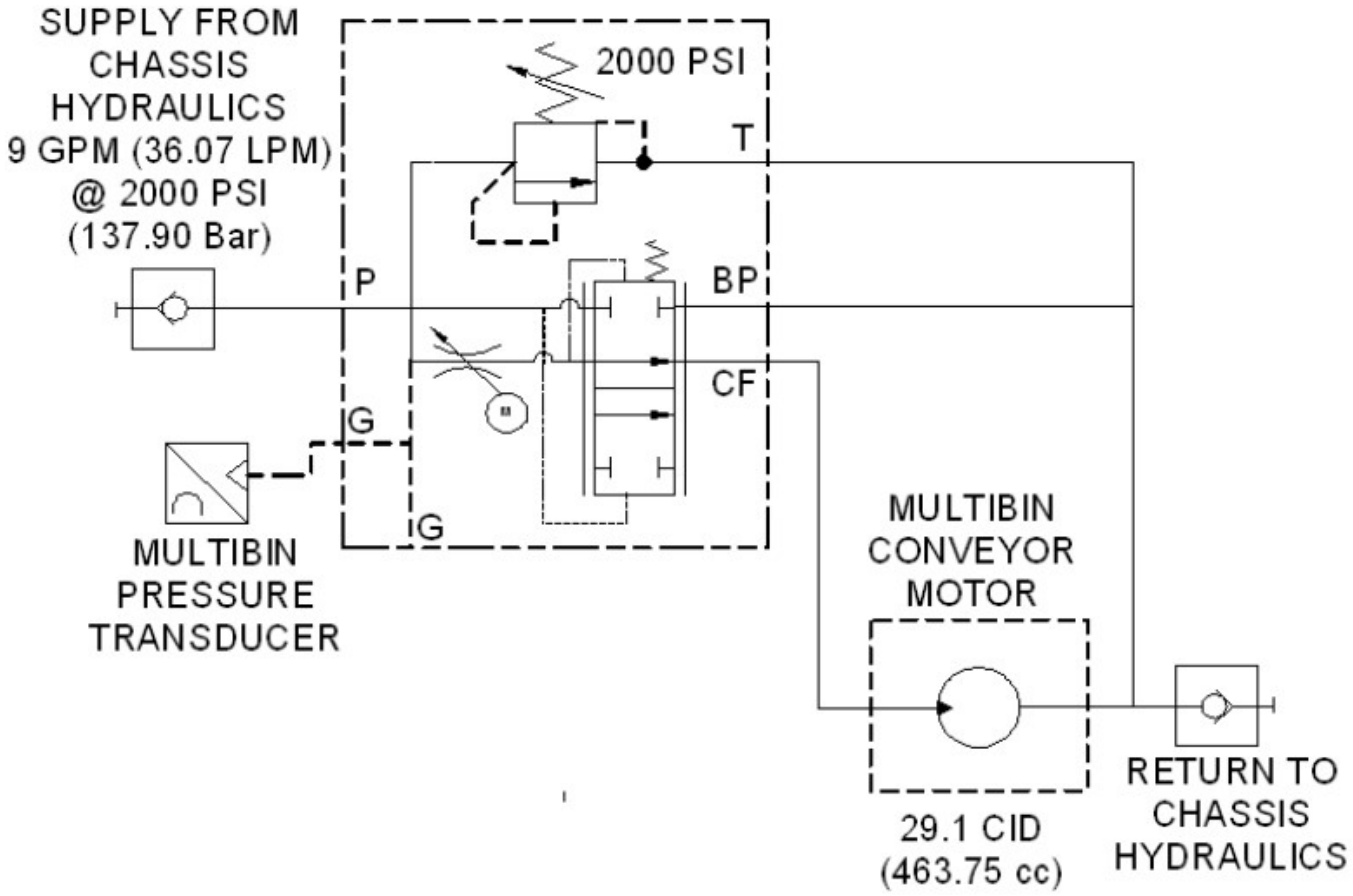

Flow Diagram

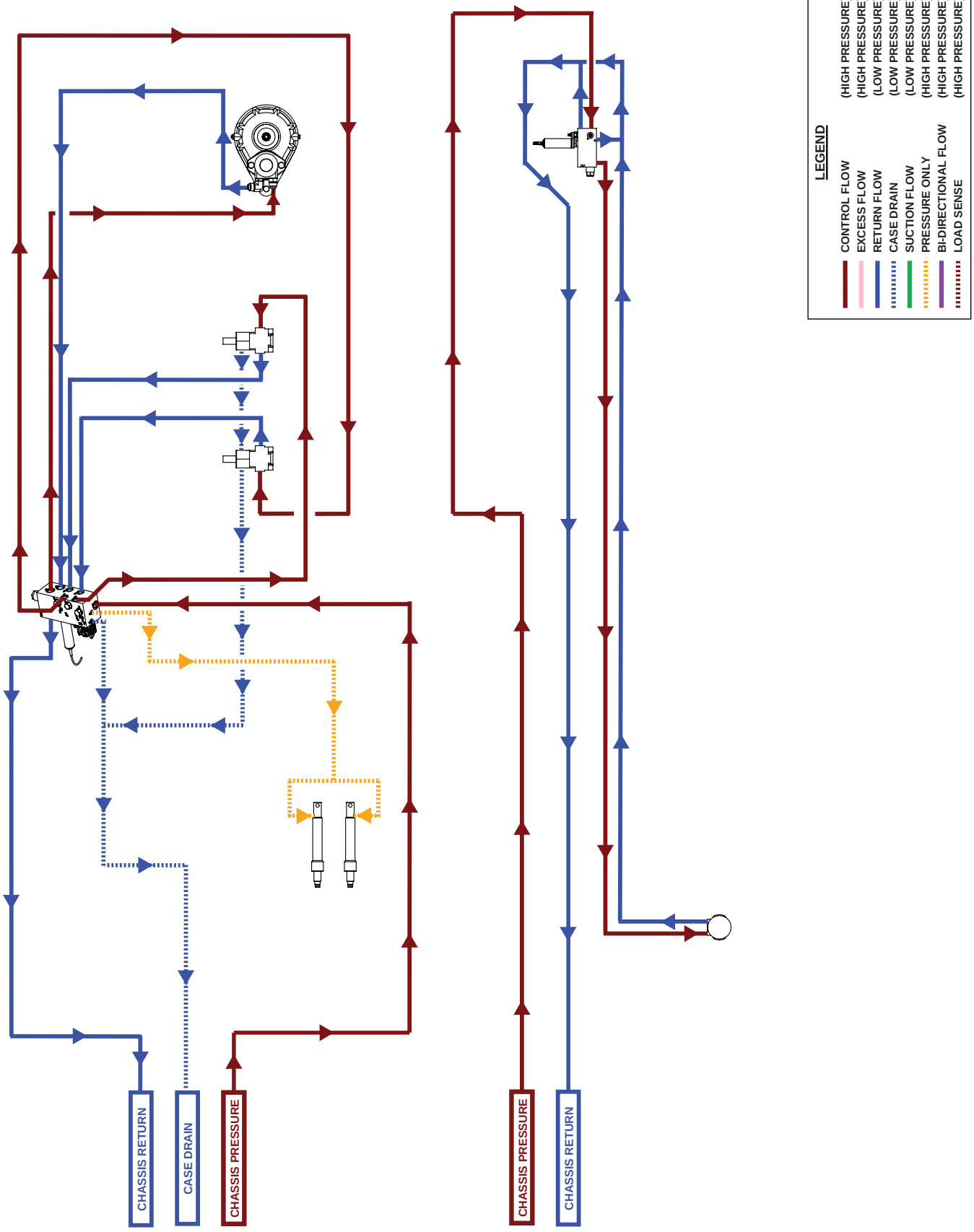

Hydraulic Schematic

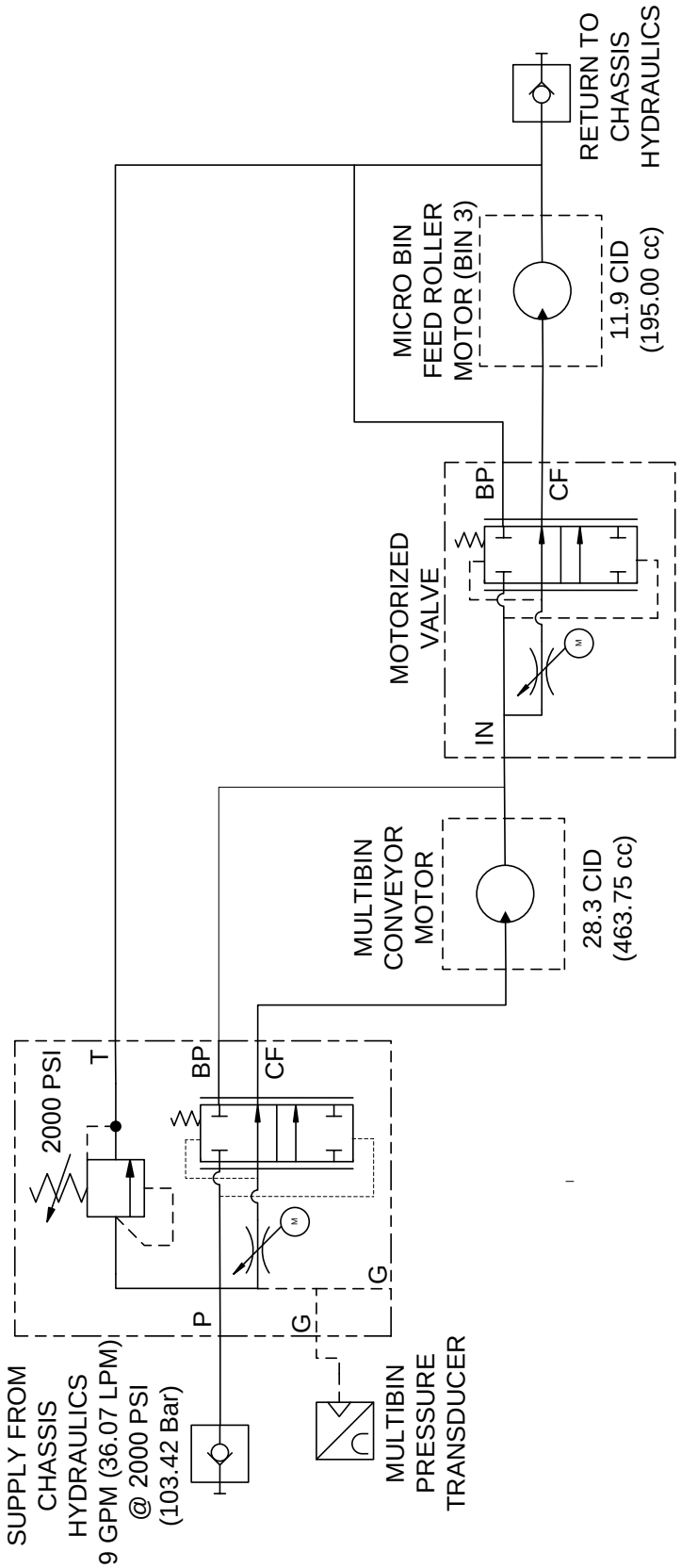

Flow Diagram

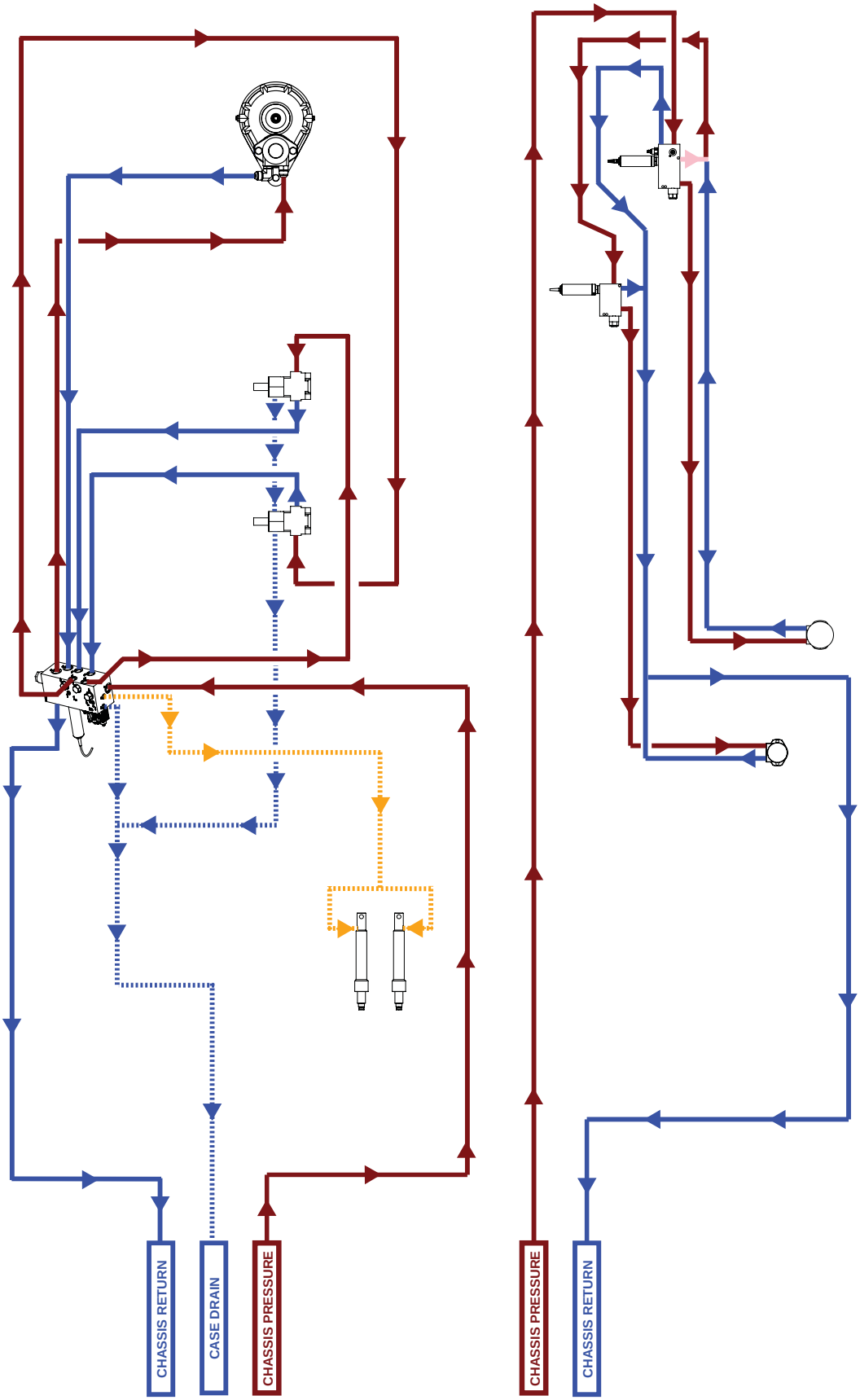

Hydraulic Schematic

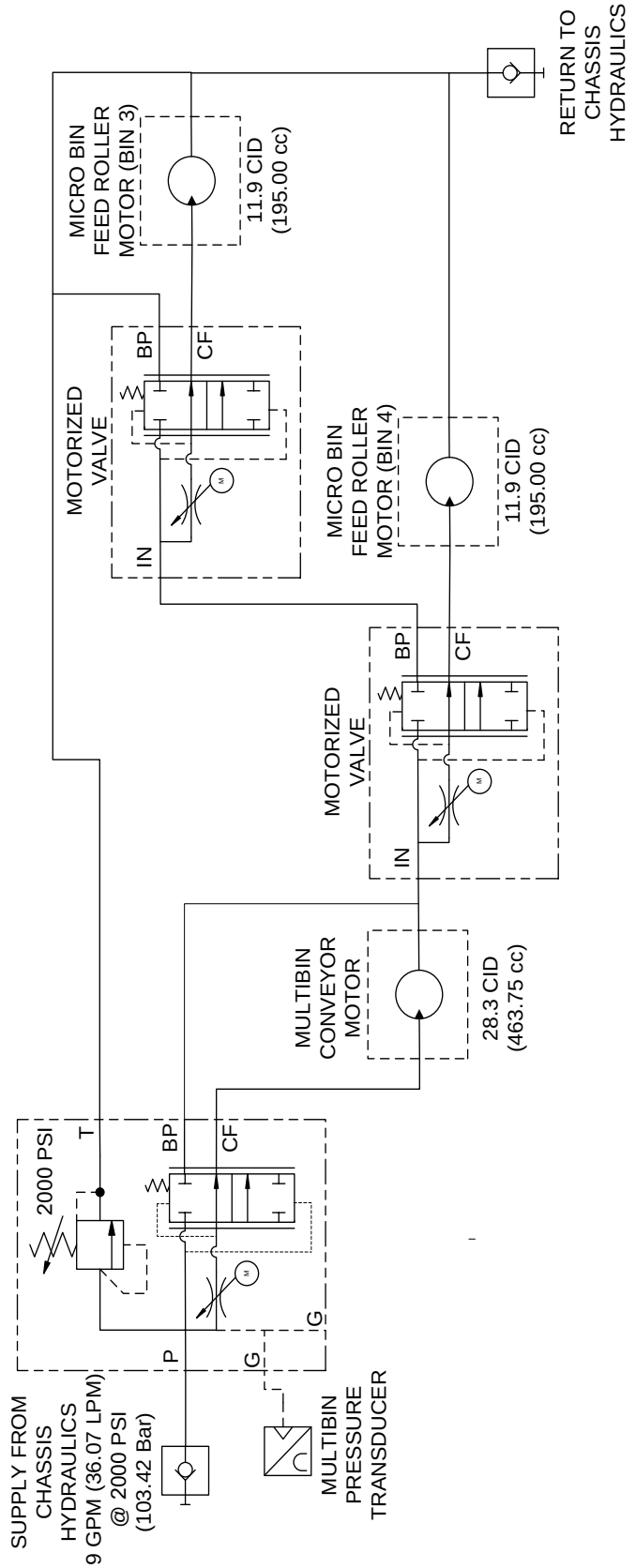

Flow Diagram

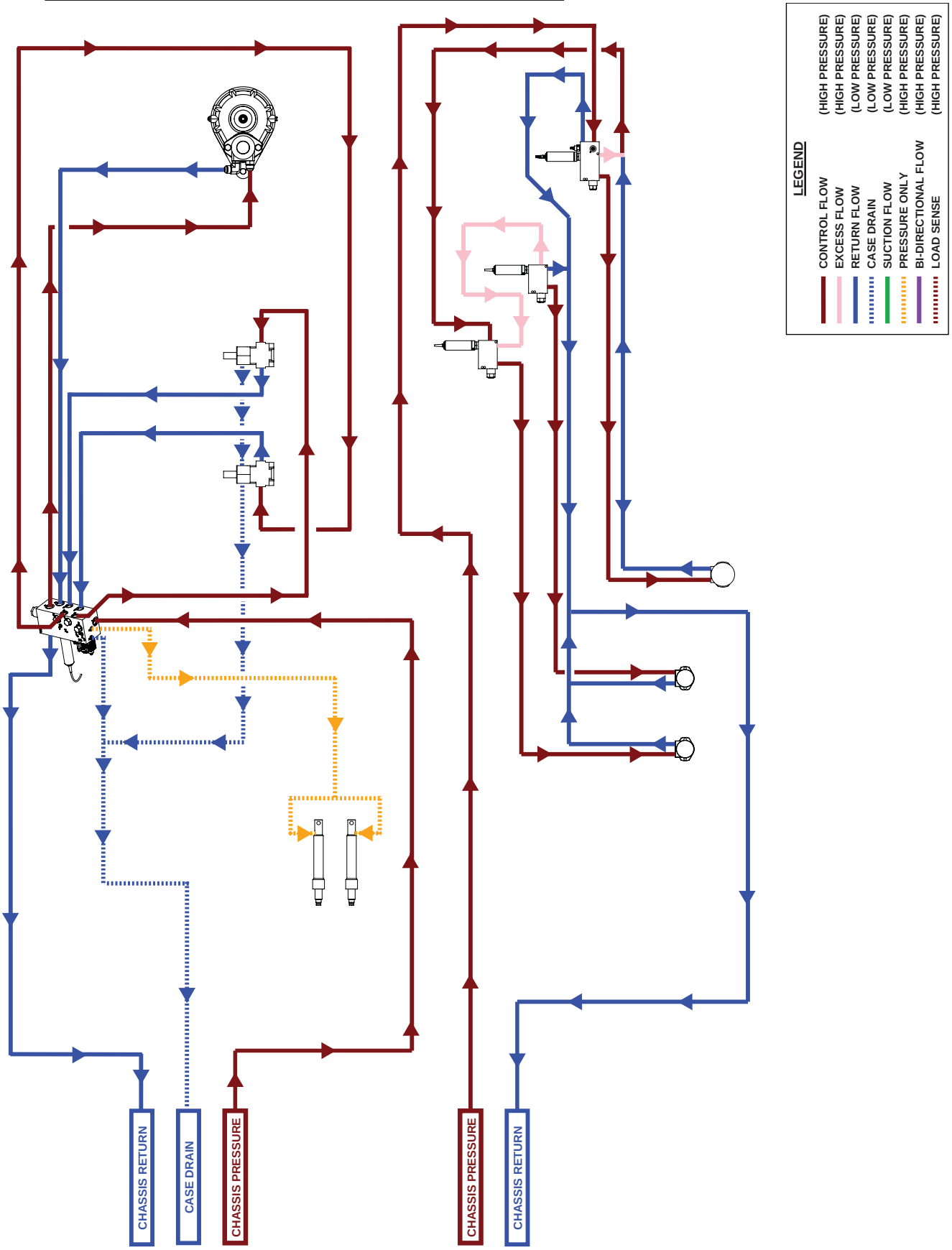

This page is intentionally left blank.

Introduction

ISOBUS is a protocol standardizing communication between chassis, displays, farm management software, and implements. Adhering to ISO 11783 standards, ISOBUS allows chassis and implements of different colors to share information through a common display. The use of ISOBUS technology allows the end user to minimize the number of necessary monitors in the cab of the chassis, while still enabling full functionality of the implements. The data displays the same way on any monitor.

How the ISOBUS Works

The BUS is a distinct set of conductors designed to carry data and control signals within a system of parallel connected equipment. Information from the equipment modules is transmitted through the BUS to a Virtual Terminal (VT) in the cab. The Virtual Terminal (VT) uploads a User Interface (UI) which feeds into any Display Monitor. From one Display Monitor, the user can read information and make control changes to the implement(s). Since everything is virtual, multiple implements can be controlled with one monitor by switching back and forth between different VT's.

Terminologies

- ISOBUS - An electronic communications network used on agricultural and forestry equipment that adheres to the ISO 11783 standards.
- VT (Virtual Terminal) - The electronic interface that resides within the system, rather than on the Display Monitor. By being virtual, the information will display consistently the same on any monitor being used.
- UI (User Interface) - The displayed information and controls the user interacts with on the Display Monitor to make any necessary changes to implement performance.
- ECU (Electronic Control Unit) - New Leader module that controls specific functions of the implement and is attached to the BUS.
- Task Controller - A crucial software component that resides within the Virtual Terminal and is required to provide support for Data Logging, Variable rate application via prescription maps, and on/off implement section control via AutoSwath.
- CANBUS - A CAN (Controller Area Network) BUS system is a vehicle bus standard that allows microcontrollers and devices to communicate with each other within a vehicle without a host computer.
- Display Monitor - The physical monitor used in the cab that communicates with the VT to run the implement(s) and display data from the operations.

Cab to Enclosure Diagram

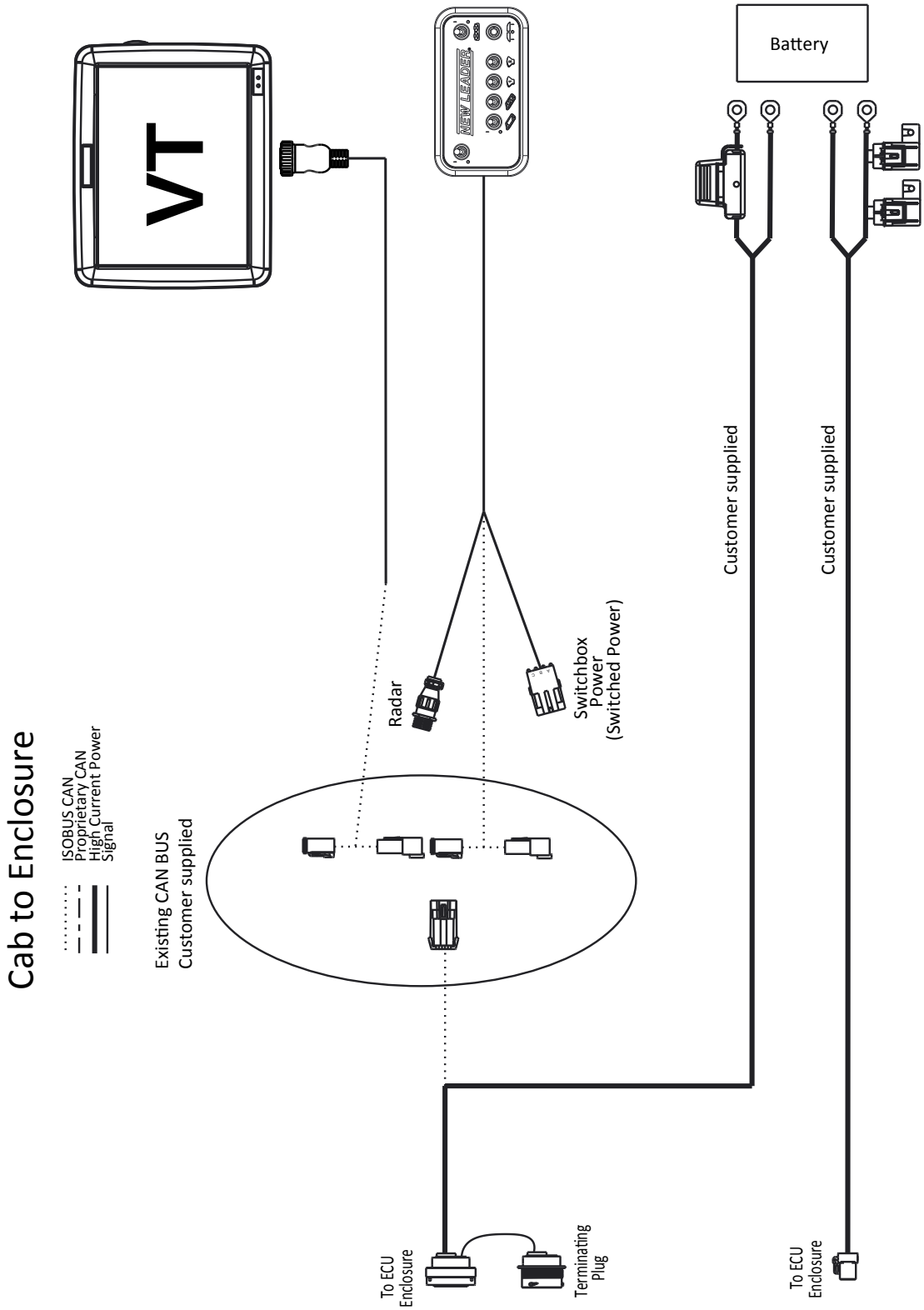

Modules to Function Diagram

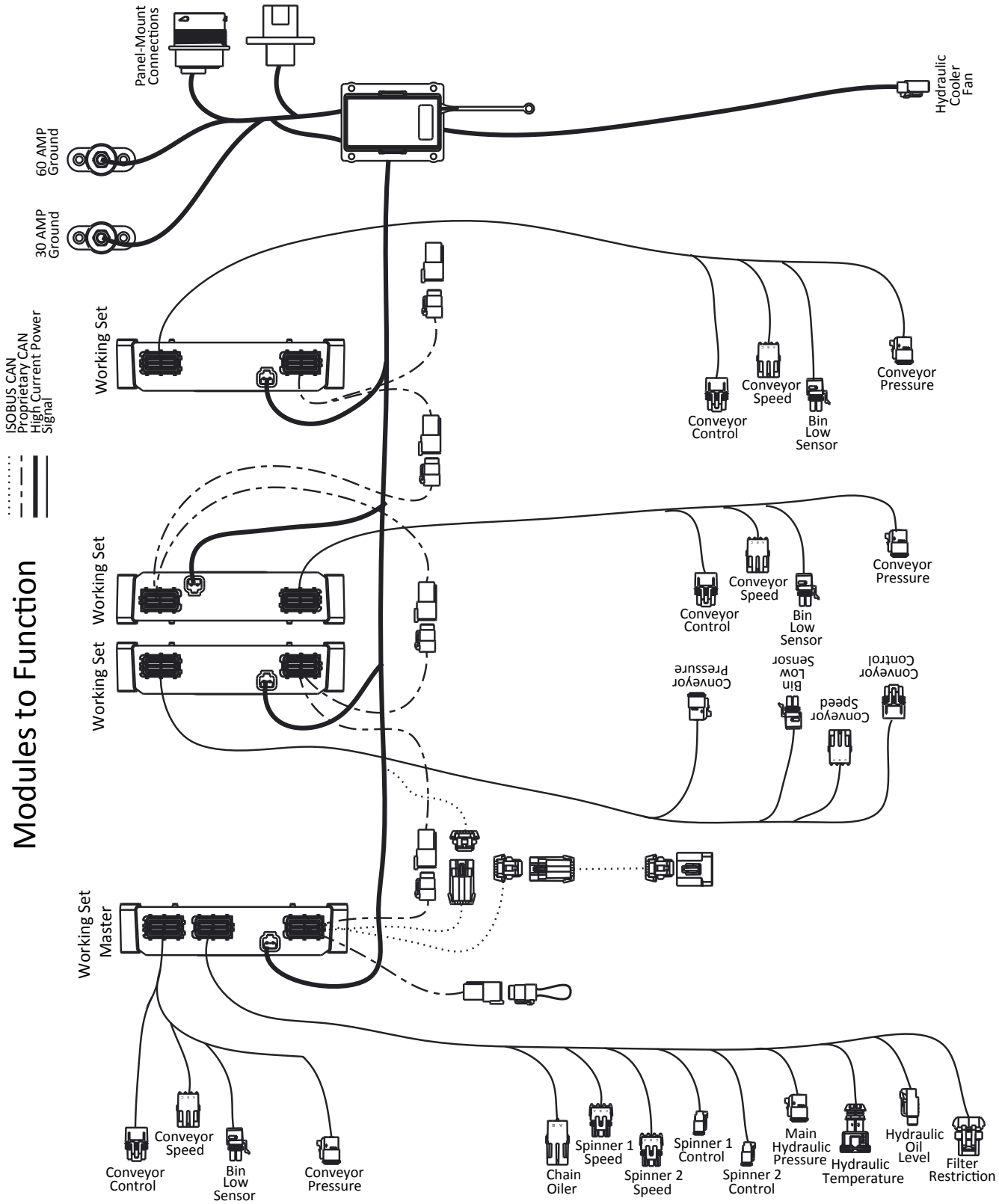

Requirements

System Requirements:
- Virtual Terminal version 3 that supports AUX-N functionality
- Task Control (Multi-product up to 4 bins)
  - TC-BAS
  - TC-GEO
  - TC-SC

Function:
- VT will load New Leader UI and assign functions to in-cab switches.
  - Ability to track totals.
  - Ability to log as-applied maps and load prescription maps.
  - Ability to activate section control or AutoSwath.

Navigation

To activate the New Leader Controller Interface, power up the monitor and activate the VT settings. For instructions on how to activate the VT, see the Manufacturer's Operations Manual for the specific monitor being used.

Activation of VT will bring up the New Leader Home Screen, also called the "Run Screen", as shown in Figure 1.

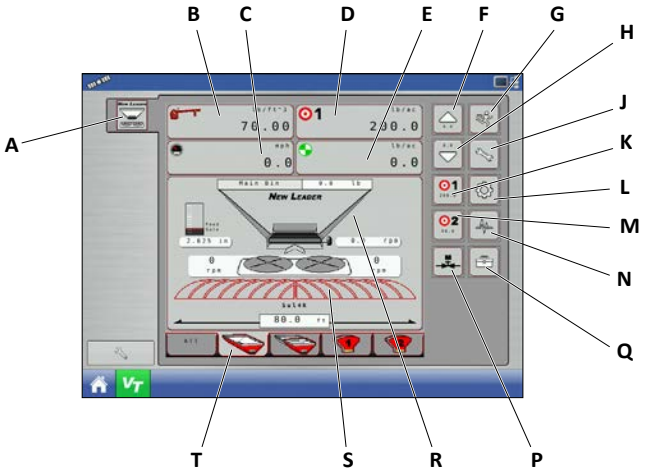

Figure 1 - Home Screen

A	Spreader Operations	K	Target Rate 1
B	Density	L	Calibration
C	Speed Source	M	Target Rate 2
D	Target Rate	N	Diagnostics
E	Actual Rate	P	Manual Conveyor Mode
F	Increase Rate Value	Q	Tools
G	Run Screen	R	Bin/Gate settings
H	Decrease Rate Value	S	Spinner Settings
J	Settings	T	Bin Selection

Figure 2 - New Leader Home Screen

An on-screen Numeric Keypad is made available for changing configuration settings and calibration numbers. Press the keypad button to access the on-screen numeric entry screen. Keypads may look different depending on VT being used.

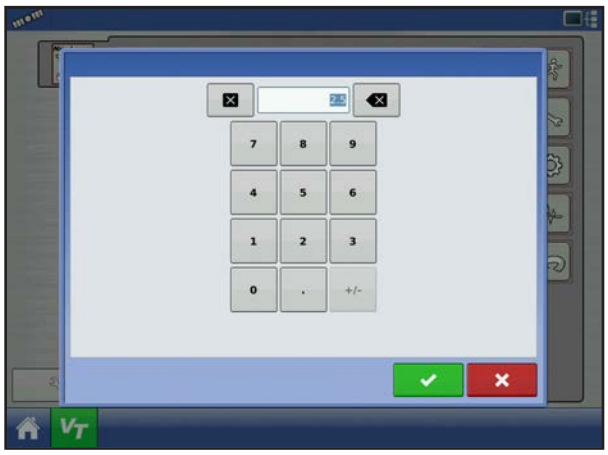

Figure 3 - Numeric Keypad

Navigation Control Buttons

Back Button

Forward Button

Return to Previous Screen

Accept Entry

Cancel

Machine Configuration

NOTE:	Refer to default settings table at end of controller section for factory setup defaults.

NOTE:	Before use, Display Monitor must be setup to enable VT connection and a machine configuration may need to be built. See Manufacturer's Operations Manual for detailed instructions on these processes.

Initial Configuration/Factory Setup

(Only seen on first boot, or if system is reset/reconfigured)

- Power up Display Monitor and activate VT.

- Alert screen appears identifying that system is not configured. Press ✓ to continue.

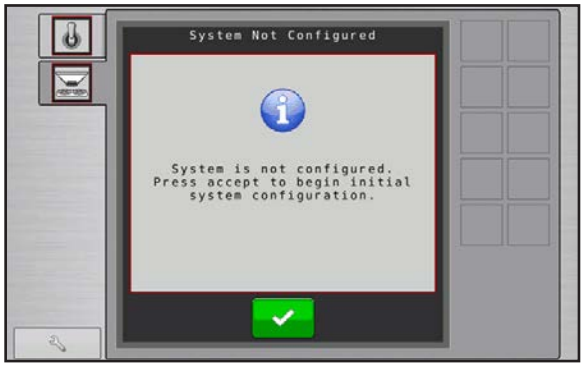

Overview of attached modules:

- Number of spreader modules will be shown along with any add on modules. Press ▶ to continue.

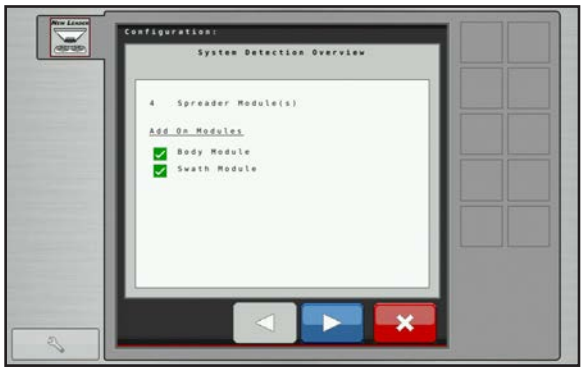

Enable Installed Bins

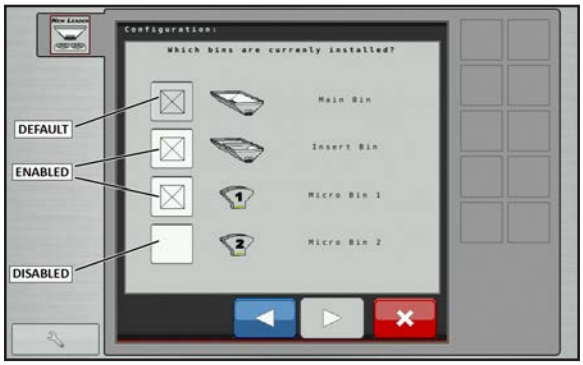

- Enable all bins that are installed on the unit by pressing the button next to each. A ☒ will appear next to enabled bins as shown. Press ▶ to continue.

Bin Settings

Bin settings include Name, Capacity, Bin Sensor, Feedgate enabled/disabled, and Pressure Transducer calibration.

- Enter Capacity for Main Bin using keypad. Enable or disable bin level sensor as required. Press ⏱ to edit pressure transducer settings. If standard transducers are being used, press ▶ to continue.

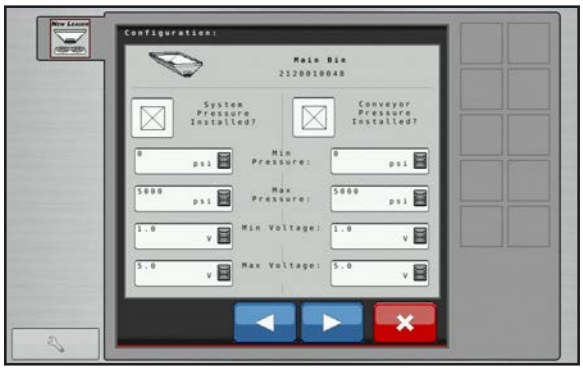

- Enable transducers and set calibration settings as necessary (adjust only if standard HECO provided transducers are not being used). Press ▶ to continue.

- Repeat step 3 for MultApplier or MultiBin Bin 2 as necessary. Press ▶ to continue.

- Repeat step 3 for MultiBin Micro 1 as necessary. Press ▶ to continue.

- Repeat step 3 for MultiBin Micro 2 as necessary. Press ▶ to continue.

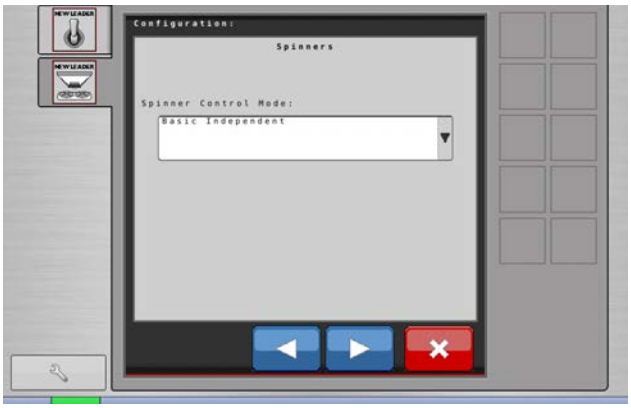

- Monitor- open loop control with spinner speed read out.
- Basic Single- Closed loop control for one PWM valve- Used on L4000
- Basic Independent- Closed loop control for 2 PWM valves- Used on L4500

GPS Offsets

Editing the task controller GPS offset settings will determine drop point of material behind chassis.

- Select Towed or Self Propelled and enter GPS Offset using keypad.
- For single axle towed units, enter the distance from the center of the hitch pin to the center of the axle (a). Then enter the distance from the center of the axle to the center of the spinner disc (b).
- For self-propelled units, enter the distance from the center of the rear axle to the center of the spinner disc (a).
- NOTE: For units and trailers with tandem axles, use the center of the tandem for measurement reference point.
- Press ▶ to continue.

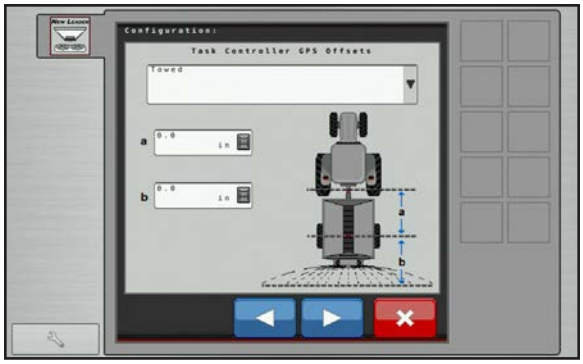

Towed

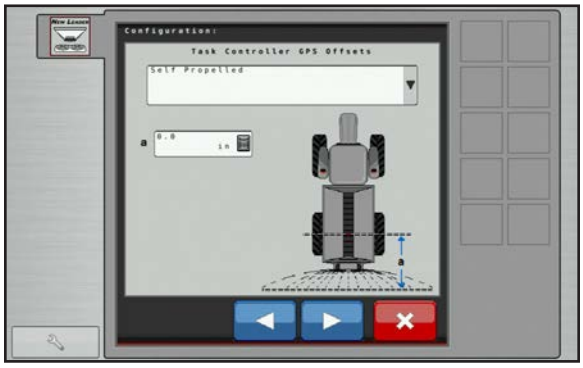

Self-Propelled

System Setup Summary

- Verify all settings are correct. Press ✓ to continue or ▶ to go back and adjust as necessary.

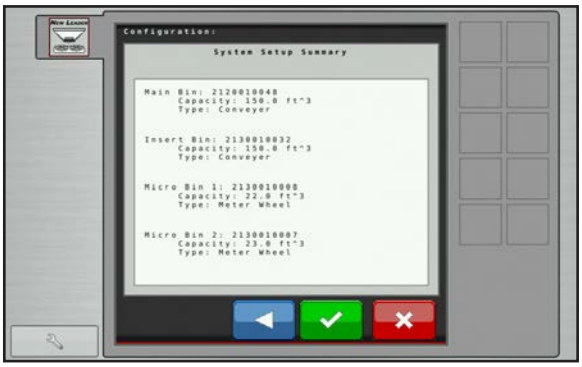

Configuring Auxiliary Switches

- Switches must be configured before calibration.
- Switchbox switches need to be mapped. Use the Display Monitor's operations manual to map all switches as necessary.

Settings

Changing machine calibrations allows operator to enable/disable bins, adjust valve calibration numbers, change alarm settings and reset modules. On the Home Screen, press to change these settings:

Press Profile Management to to enable/disable bins.

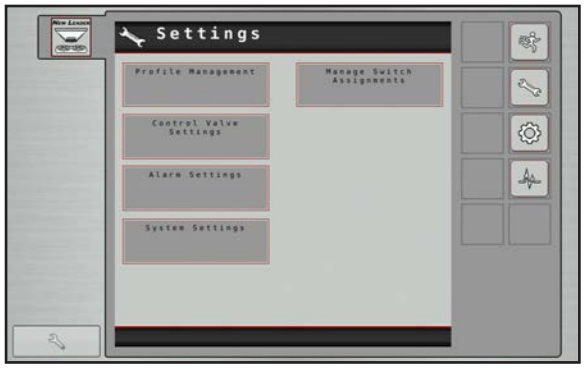

Enable/Disable Bins

- Each Installed Bin (as set up in Step 4) will appear. Press each "Enable" button to enable or disable each bin as appropriate for the current job.

Valve Calibration Adjustment

- Press Control Valve Settings to adjust valve calibration numbers.

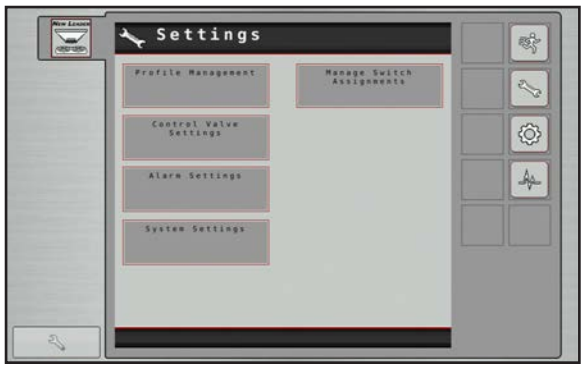

NOTE:	Default values are not fine tuned and may result in a slower response time than desired. Adjust at first time start up and when valve is replaced.

- Press to set spinners. Enter appropriate settings:
  - PWM Valve settings:
    - "Monitor" - no PWM control
    - "Control" - tries to maintain spinner speed at all times regardless of available hydraulic flow. Best for hydrostatic or CVT drives.
    - "Hold" - Preserves last PWM signal to valve when conveyor is deactivated. Best for geared transmissions with gear pumps.

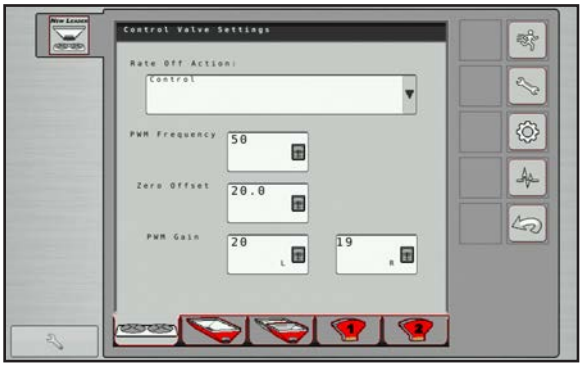

- PWM Frequency - Frequency that PWM control valve is pulsed at. Settings can be found from valve manufacturer.
- Zero Flow Offset - Represents maximum duty cycle sent to control valve without producing any hydraulic flow from. Increase this number to hit target rate sooner.

IMPORTANT!	Setting Zero Flow Offset too high will cause spinners to overshoot Low Spinner Speeds and could cause delay in reaching set speed. Adjust as needed in small increments.

- PWM Gain - Determines how aggressively control valve responds when making rate adjustments. Higher value means more aggressive system response.

IMPORTANT!	Setting PWM Gain too high spinners will become erratic. Adjust as needed in small increments.

- Set Conveyors by selecting each bin at bottom of screen.

NOTE:	If using PWM valves instead of Servo valved, select "PWM" from "Control Valve Type" list and enter settings as per notes on Spinner valves and test for accuracy.

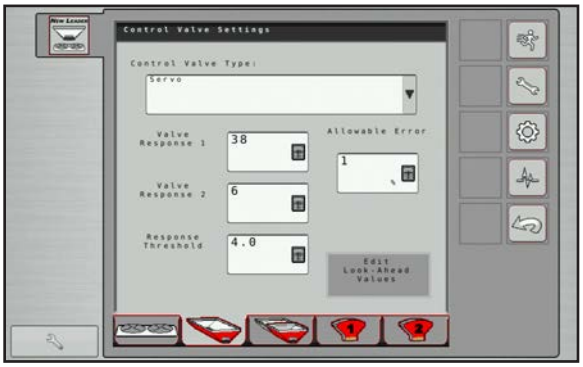

NOTE:	Setting value too low can cause product control system to continually hunt for target application rate. Setting too high will cause excessive product application error and a delay in target rate being reached.

SERVO

Enter appropriate settings:

- Valve Response 1 - Determines speed of servo valve when product control error exceeds Response Threshold setting. Represents fast speed of servo valve. Decreasing value will cause servo valve to run slower. Default setting is 40%.
- Valve Response 2 - Determines speed of servo valve when product control error is less than

Response Threshold setting. Represents slow speed of servo valve. Decreasing value causes servo valve to run slower. Default setting is 8%.

- Response Threshold - Determines where control channel switches between using Valve Response 1 and Valve Response 2 speed setting. Leaving all other valve control settings at default value and making small adjustments to this setting is usually all that is required to fine-tune system performance. Default setting is 4.

NOTE:	Decreasing Response Threshold value will have overall effect of speeding up servo valve response. Increasing Response Threshold value will have overall effect of slowing servo valve response.

- Allowable Error - Determines the percent of error that is allowed prior to product control system making any flow rate changes. 2% - 3% is normal dead band setting range.

PWM

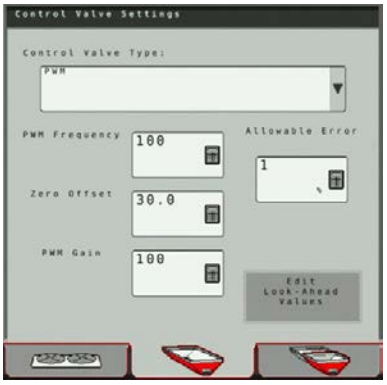

- **PWM Frequency**
  - Frequency that the PWM control valve is pulsed.
  - Settings can be found from valve manufacture
  - Do not adjust
- **Zero Offset**
  - Represents the maximum duty cycle sent to the control valve with out producing any hydraulic flow.
  - Increase this number to hit target rate sooner
  - Note: Setting this value too high will result in constant overshooting of the target rate.
- **PWM Gain**
  - Gain determine show aggressively the control valve responds when making rate changes. Higher the value means more aggressive system response.
  - Note: Setting this value too high will result in erratic operation.
- **Allowable Error**
  - Is the percent of error that is allowed before the product control system makes any f Color low rate changes.

Alarm Settings

- Press Alarm Settings to adjust alarm settings.

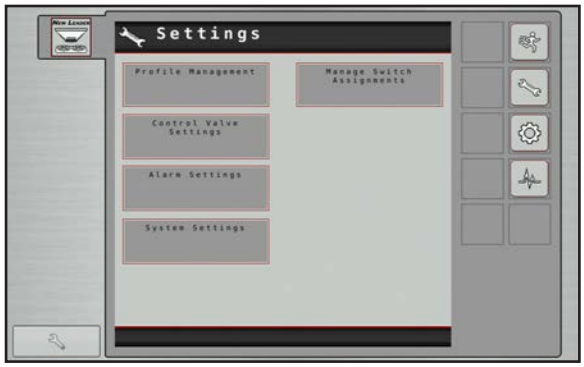

- Edit each Alarm setting as desired.

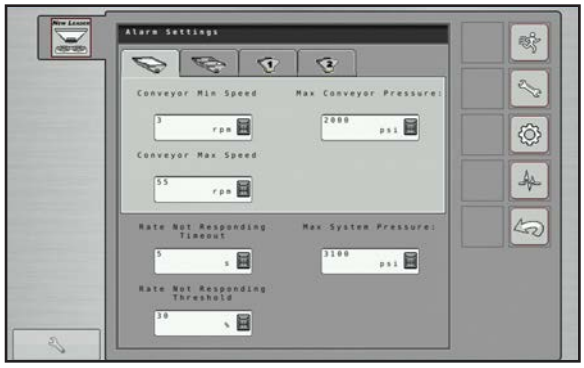

Reconfigure System

NOTICE!	Pressing "Reset" under "System Settings will restore all settings to factory default and all calibration numbers will be lost. It should only be pressed if instructed to do so by service technician or New Leader product support.

- Press System Settings to reset/reconfigure system.

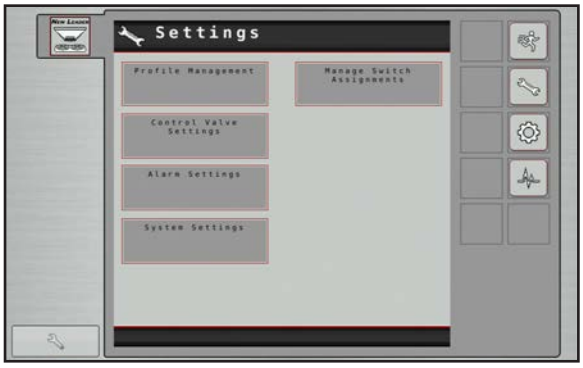

- "Reconfigure" allows the user to adjust any of the system settings made during first time start up ("Machine Configuration" steps). "Reset" will restore all settings to factory default and all calibration numbers will be lost.
- Display will then jump to GPS offset screen. See "GPS Offsets" in this section for details.

Switch Assignment

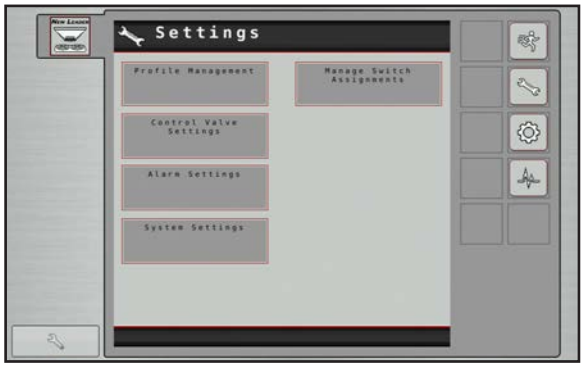

- Press Manage Switch Assignments to show connected devices.

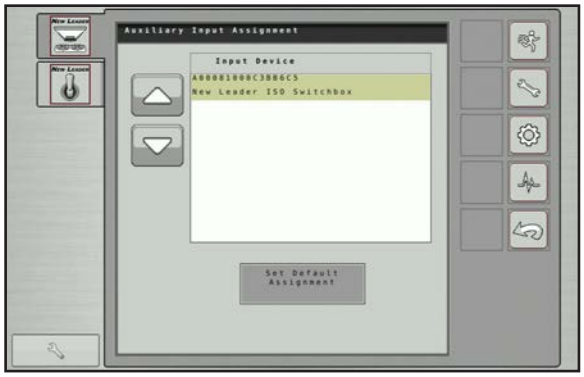

- Connected devices will appear in the device list.
- If using a New Leader switch box, press Set Default Assignment to automatically map the switches to the correct function.

Component Calibration

NOTE: Before regular use, system must be calibrated to ensure accurate spreading.

- Power up Display Monitor and activate VT.
- The Run screen will appear. Press to continue.

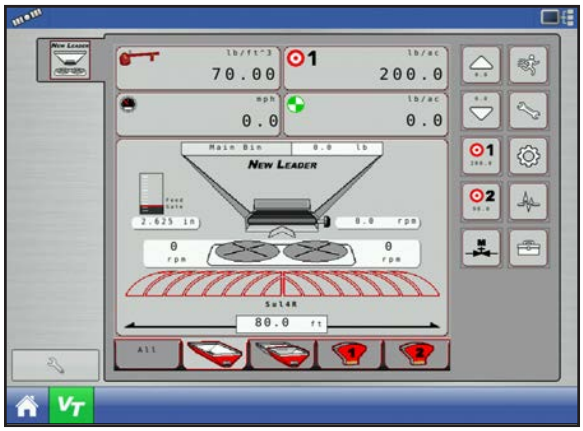

Spinner Disc Calibration

- Press to calibrate spinner discs.

- Use keypad to edit numeric setting as necessary:
  - Standard spinner discs, set to 4.
  - If using 5 fin discs, set to 5.
  - If using 6 fin discs, set to 6.
  - Press to accept change and continue,
  - or to cancel.

Calibrate Rate Encoder

1. Press Rate Encoder to calibrate encoder.

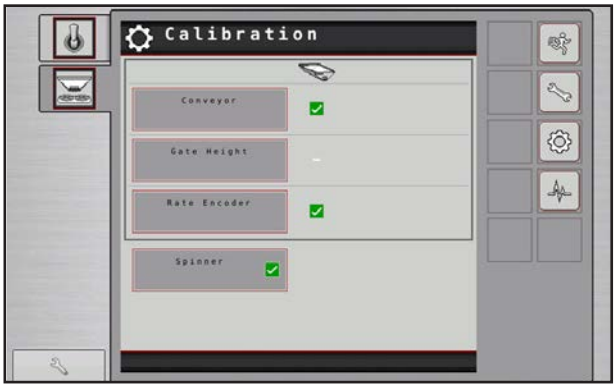

2. Use keypad to edit setting as necessary. Enter 180 or 360 as labeled on back of encoder. Press to continue.

This page is intentionally left blank.

Conveyor Calibration

IMPORTANT! For best results, a catch test must be done for each product to be spread before season begins, or any time a new supply of product is received.

- Press Conveyor to calibrate conveyor.

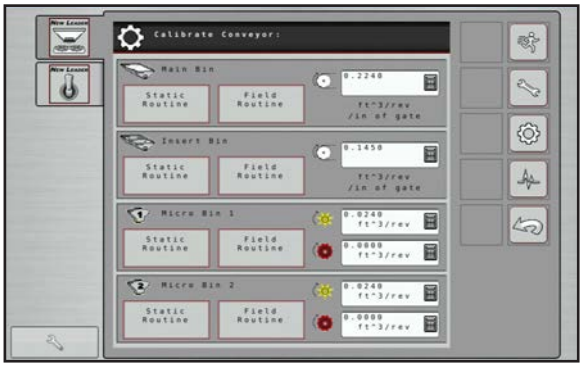

- Manually enter cubic feet per revolution (CFR) rate using keypad.
- To begin catch test, press Static Routine for the bin to be tested.
- To perform in-field calibration, press Field Routine for the bin to be tested.

⚠WARNING Do not work near rotating spinners. Severe injury can result from contact with moving parts. Failure to comply with this requirement could result in death or serious injury.

- Spinners will automatically shut off. For added safety, disconnect PWM valves. Press ✓ to continue.

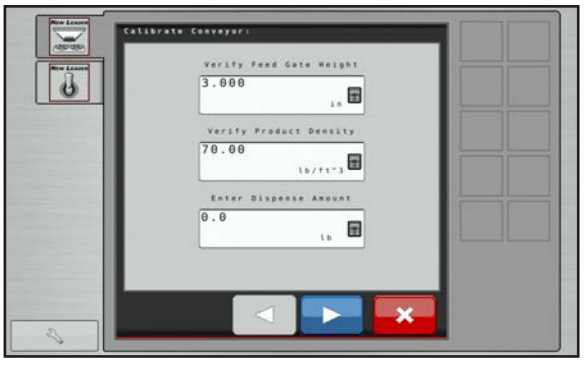

- Verify Feed Gate Height and Product Density are correct. Use keypad to edit as needed. Enter Dispense Amount using keypad. Press ▶ to continue.
- Bring engine up to full operating RPM.

- Using the control buttons (Reset, Run, Stop), run a catch test. If spreading product that has already been tested, press to continue. To begin a test, press . Conveyor will run.
- Once controller dispenses specific amount, conveyor will stop. Press to continue.

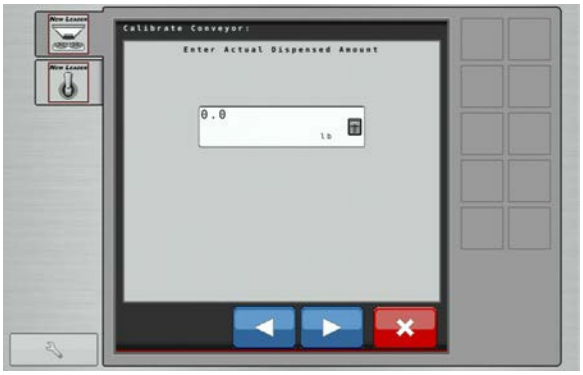

- Weigh material dispensed and enter actual weight of material dispensed. Press to continue.

- It is recommended a minimum of three (3) tests be done PER PRODUCT to ensure accuracy. Once each test is done, press "Repeat Calibration" to run a subsequent test. When finished, press .

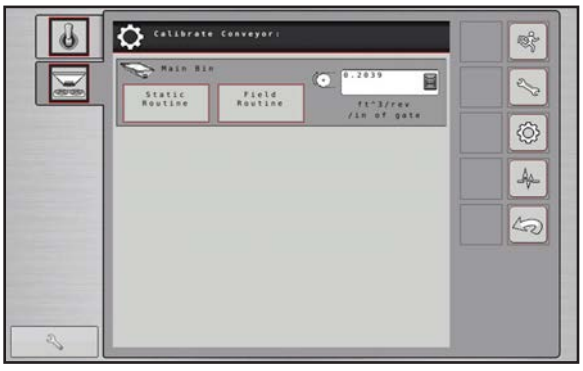

- The main Calibration screen will appear. To calibrate with a known amount brought to a field, press Field Routine .

Note:	Field totals can be reset from Summary Screen if needed.

- After dispensing product in field, screen displays system perceived total of dispensed product. To enter actual dispensed amount, press ▶.

- Using keypad, enter actual weight of product dispensed. Press ▶ to continue.

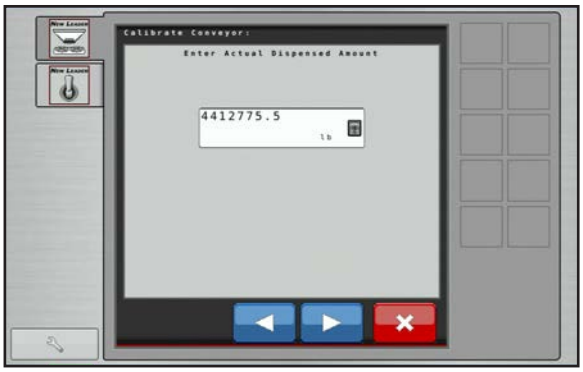

- New cubic feet per revolution (CFR) rate will be displayed. Press ✓ when finished.

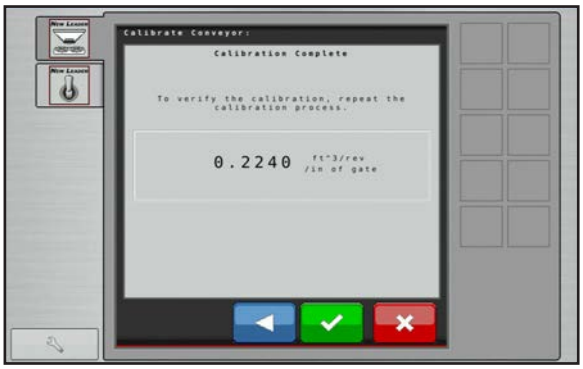

Operations/Features

Create New Job

The following is a guide for running system for first time.

1. Create Job in display.

This operation will vary from display to display. Refer to display manual on how to create a job using Task Control. When finished, activate VT.

2. Verify Product Density.

Material Density will vary from product to product. It is imperative that correct density is entered in controller for rates to come out correctly.

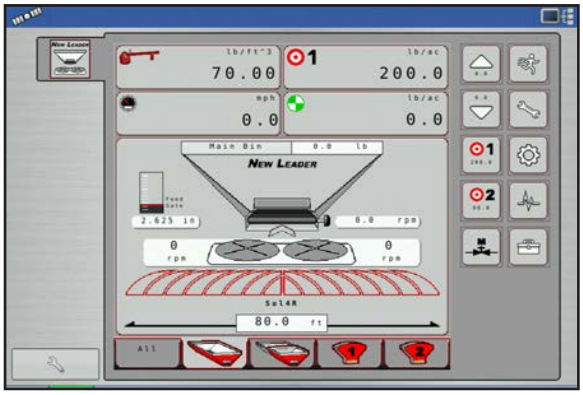

- To change product density, press

- Use keypad to enter density. Press to accept change and continue, or to cancel.

3. Verify task control in Target Rate 1.

- Rate will be driven by job setup in display. To verify this, TC should show in place of target rate 1. If not, verify job has been created correctly. Refer to display manual.

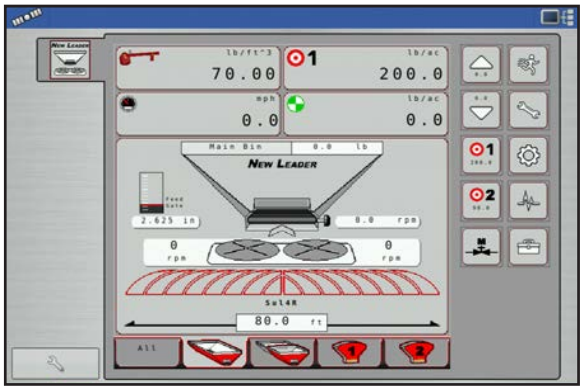

4. Verify total spread width and spinner speed:

- Different products may require different spread widths or spinner speeds. Always verify the material profile is configured correctly before applying product.
- Edit current profile or create a new one if necessary. See “Material Profile Management” for details.

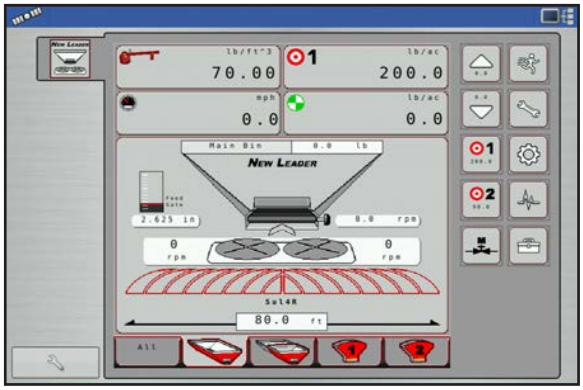

- Enable Spinner Circuit. Using keypads, enter Spinner Speed and Total Spread Width. If desired, enter Spinner Offset (see Boundary Spreading section of this manual for instructions).

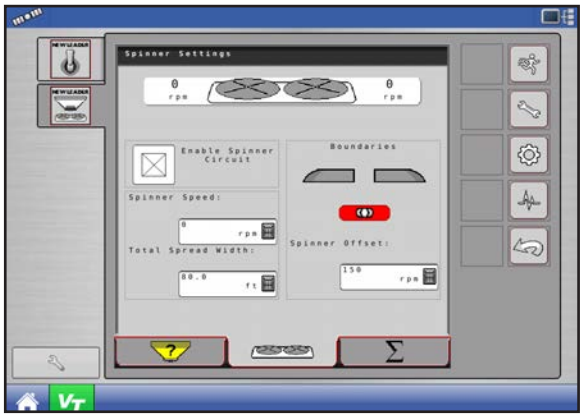

5. Verify gate opening:

- Press to set bin levels and change gate opening.

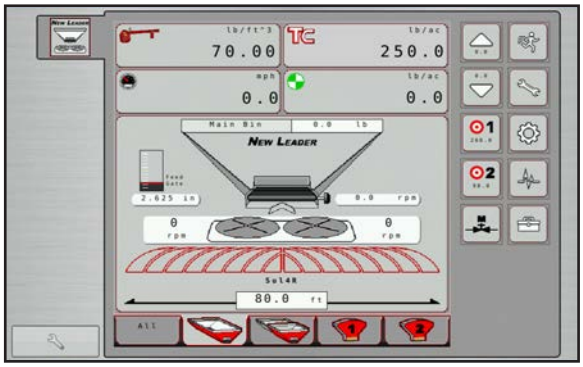

- Use keypad to set feedgate opening to correct reading.

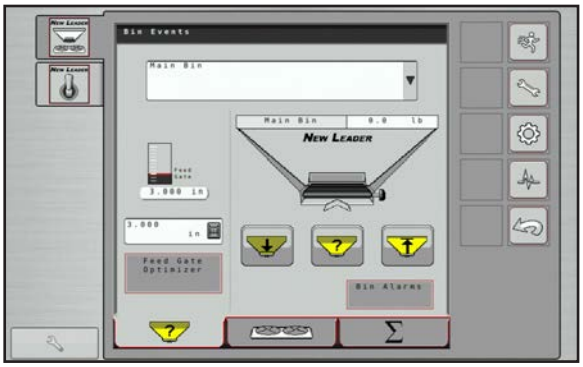

6. Verify CFR number is correct:

Different products may require different calibration numbers. Verify the CFR number is correct before applying product.

- Press then

.
- Use keypad to change CFR number as needed.

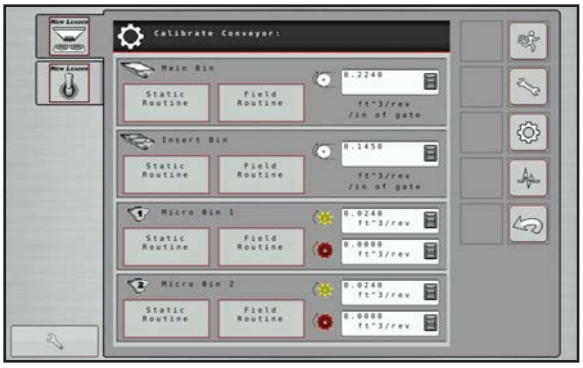

Feedgate Optimizer

NOTE:	This program will help to determine the ideal gate position for each specific application, based on speed, swath width, density, and application rate.

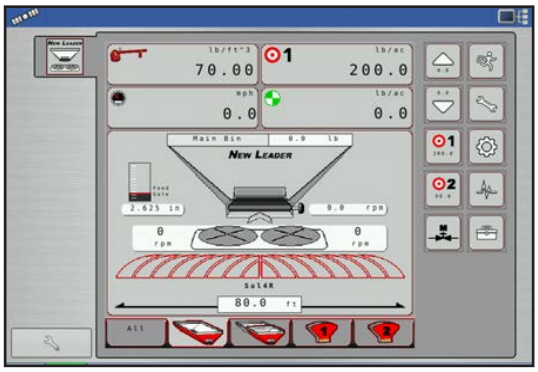

1. Power up Display Monitor and activate VT.

   - The Run screen will appear. Select appropriate bin button at bottom of screen. Press 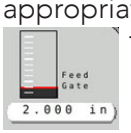 to continue.

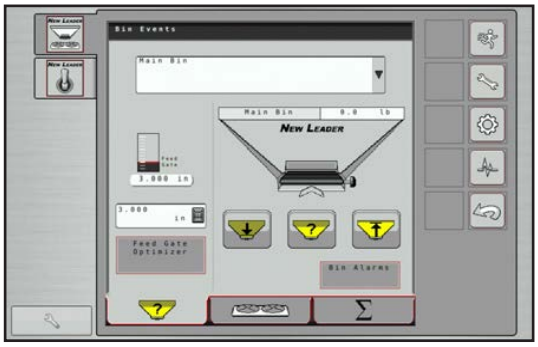

   - The Bin Events screen will appear. Press to continue.

2. Enter average speed and target rate:
   - The Feedgate Optimizer screen will appear. Using keypads, enter Average Speed and Target Rate into appropriate fields for each bin.

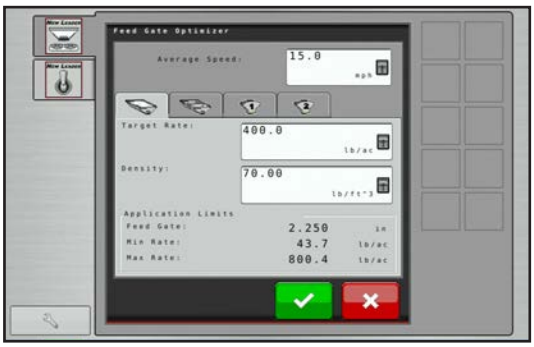

3. Accept recommended settings:

   • Recommended feedgate opening will be displayed along with minimum and maximum rates. If is selected, new feedgate setting will save and automatically move to proper height. If is selected, new settings are ignored and system settings are kept.

Boundary Spreading

NOTE: This program allows the operator to independently modify spinner speeds to change the width of spread to either side, creating a "boundary" line to maximize spreading efficiency.

- On the Run Screen, press to access spinner settings.

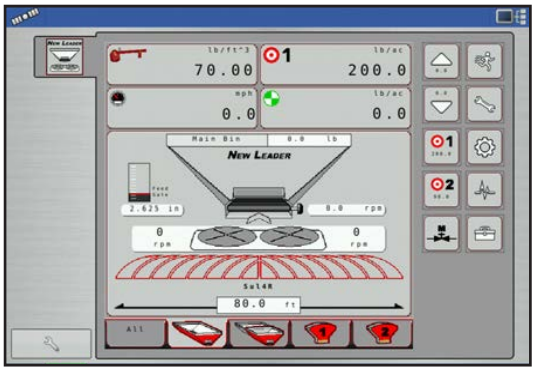

1. Enter spinner offset:
   - The Spinner Settings screen will appear. To create a Boundary, use the keypad to enter a specific Spinner Offset. Spread pattern tests should be completed for each product to be spread to determine best offset settings, based on density, crush strength and size. See "Spread Pattern" section for details. Press to save and return.

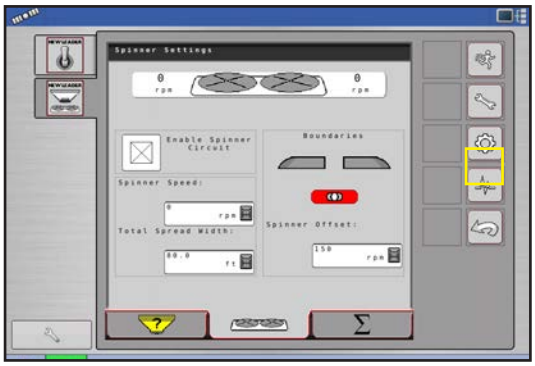

2. Enable boundary spreading:
   - When running normally, Run Screen will display all swath sections normally. To activate the Boundary, flip the spinner switch on the switch box to the side that the boundary is on.
   - EXAMPLE: If spreading with a boundary to the right hand side in relation to direction of travel, flip the switch to the right to limit the spread pattern on the right hand side.

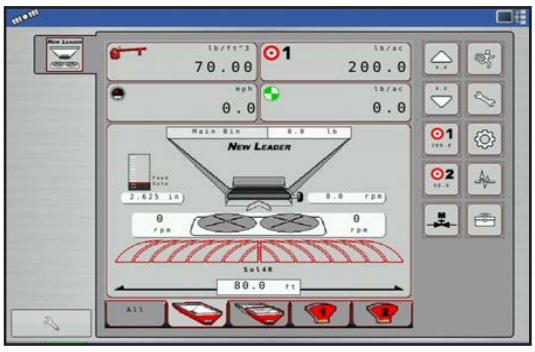

- When Boundary is activated, Run Screen will display with the outer swath section darkened on the boundary side (right hand boundary activation shown).

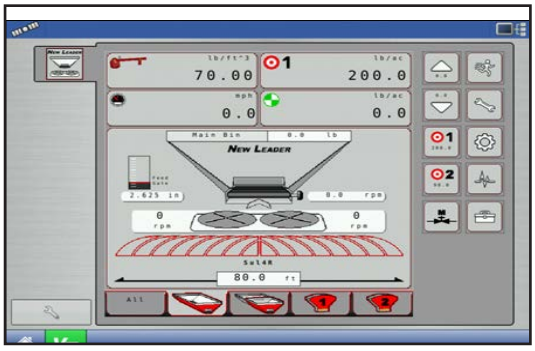

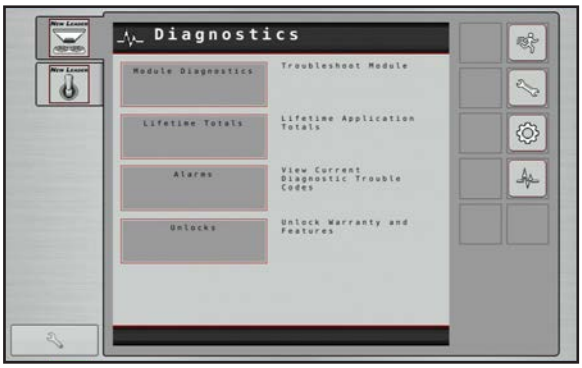

- To view unlocked features, press Unlocks.

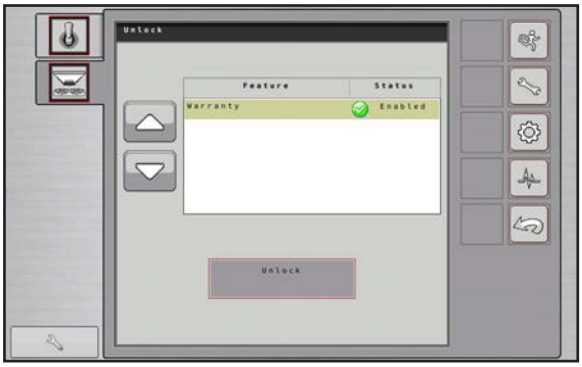

- Current unlocked features will display. Press "Unlock" to display module serial number and registration number. Press to return.

This page is intentionally left blank.

Hydraulics

NOTE:	This program will show a visual representation of hydraulic monitoring, including system pressure, temperature, conveyor pressure, and indicators for low fluid level and filter restriction. Individual bins can be viewed by pressing the bin icons along the bottom of the screen.

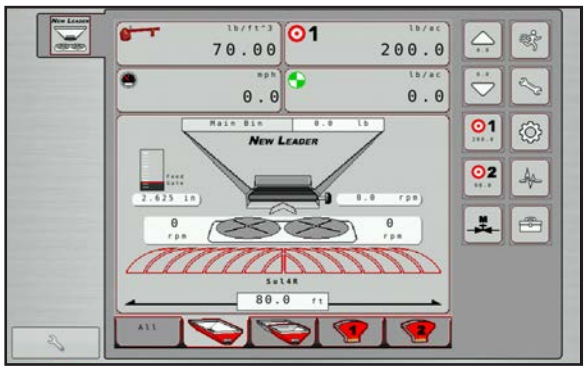

1. Power up Display Monitor and activate VT.
   - The Run screen will appear. Press to continue.

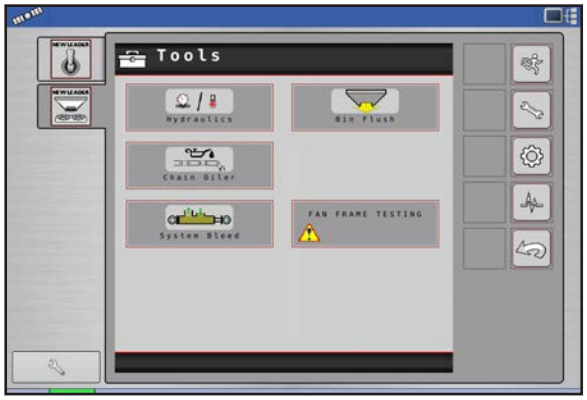

   - The Tools main screen will appear. Press to continue.

2. View hydraulic monitoring:
   - Hydraulics - System pressure, Temperature, and status of Fluid Level and Filter Restrictions will show system wide.
   - Conveyor Pressure will display for Bin 1, and cumulatively for Bins 2 - 4 as equipped.
   - Fluid Level and Filter Restriction status are shown in the lower right hand corner. When within acceptable levels, the boxes are outlined in green and display a (as shown). If fluid level is low or if filter is restricted, the box will be outlined in red and display a
   - Press to return to Tools Screen.

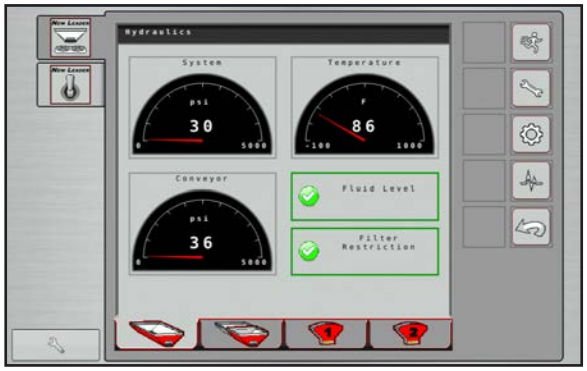

NOTE:	If the spreader does not have an onboard hydraulic reservoir, fluid temperature, fluid level and filter restriction are not accurately displayed.

This page is intentionally left blank.

Bin Flush

NOTE:	This program is used to quickly empty each bin. Spinners will automatically shut off and allow the operator to select which bins to empty.

1. Power up Display Monitor and activate VT.

- The Run screen will appear. Press to continue.

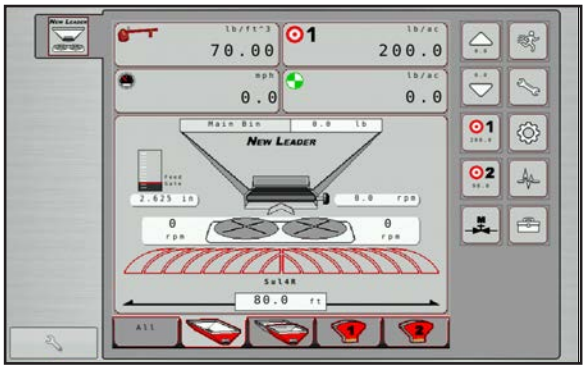

- The Tools main screen will appear. Press to continue.

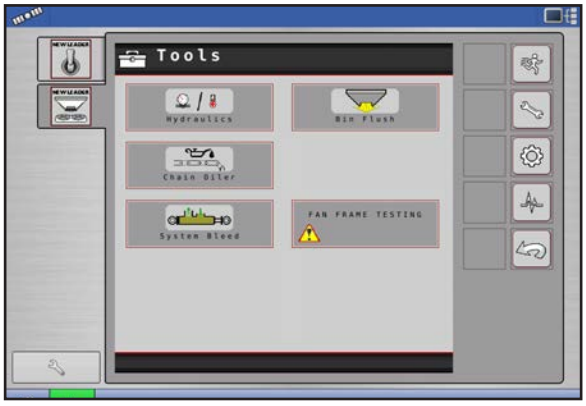

⚠WARNING Do not work near rotating spinners. Severe injury can result from contact with moving parts. Failure to comply with this requirement could result in death or serious injury.

⚠WARNING For added safety, unplug PWM valves to ensure spinners cannot run while in Bin Flush mode to avoid injury. Failure to comply with this requirement could result in death or serious injury.

- Bin Flush will automatically disable spinners. Press to continue.

2. Select bins:
- Select bins to be flushed by pressing enable buttons next to each. To adjust conveyor RPM for flush, press Bin Rate Settings.

3. Set conveyor RPM:
- Use keypads to set conveyor RPM for each bin. 20 RPM is default.
  - Bin 1 Maximum = 50 RPM
  - Bin 2 Maximum = 60 RPM
  - Bins 3 & 4 Maximum = 85 RPM

  Press ✓ to continue.

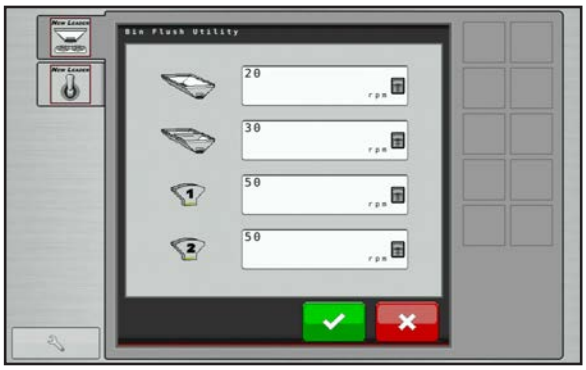

4. Perform bin flush:
- To flush bins, press ▷. Conveyors will run until □ is pressed.

  When process completes, press ↩ to continue.

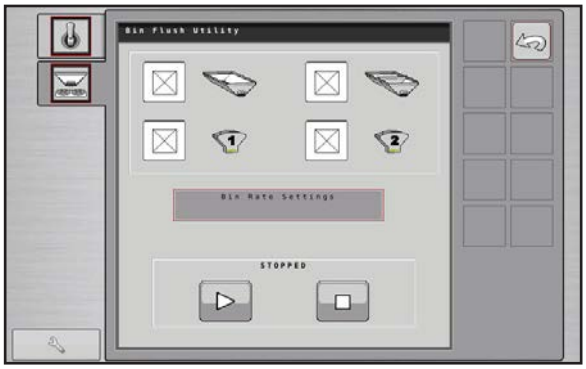

⚠WARNING

Do not work near rotating spinners. Severe injury can result from contact with moving parts. Failure to comply with this requirement could result in death or serious injury.

- When exiting Bin Flush process, spinners will restart. Plug PWM valves back in if it was previously disabled. Press ✓ to continue.

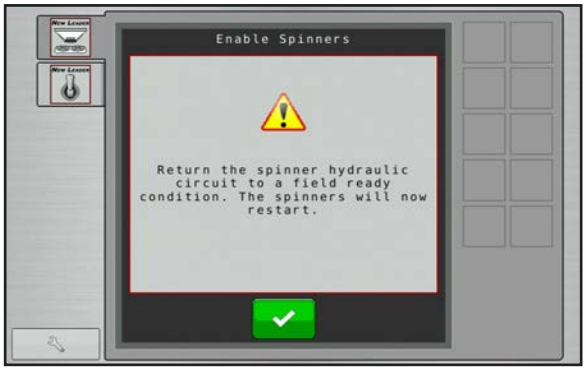

Body Module

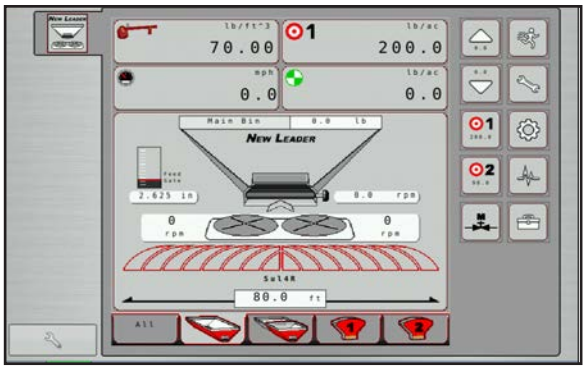

1. Power up Display Monitor and activate VT.
- The Run screen will appear. Press to continue.

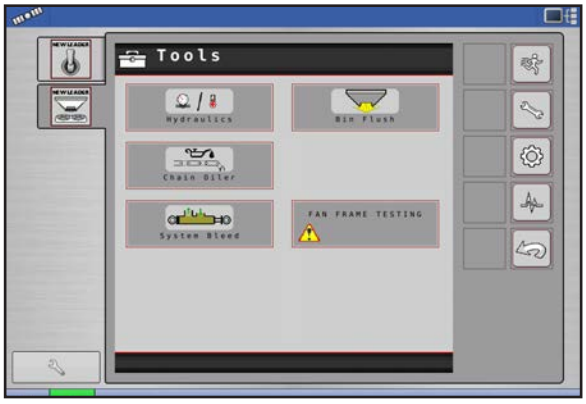

- The Tools main screen will appear. Press to continue.

Bin Cover Control

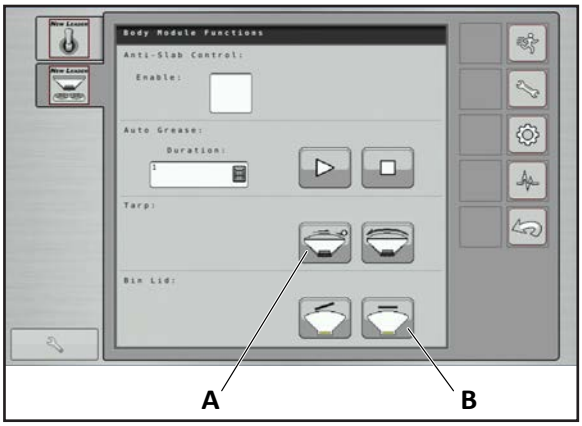

- If equipped, press (A) to open and close tarp.
- If MultiBin insert is installed, press (B) to open and close Micro cover.

Chain Oiler

NOTE: This program is used to manually oil the chain, set alarm frequency, and set auto-lube settings.

1. Power up Display Monitor and activate VT.

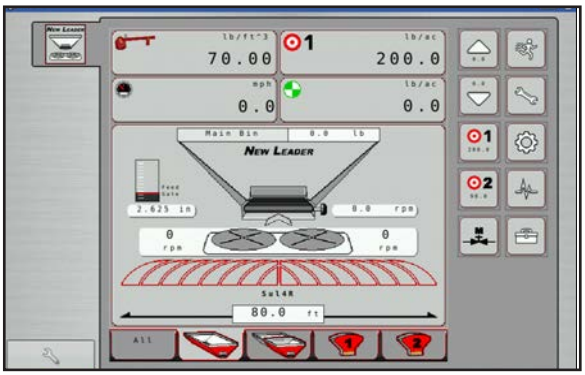

- The Run screen will appear. Press to continue.

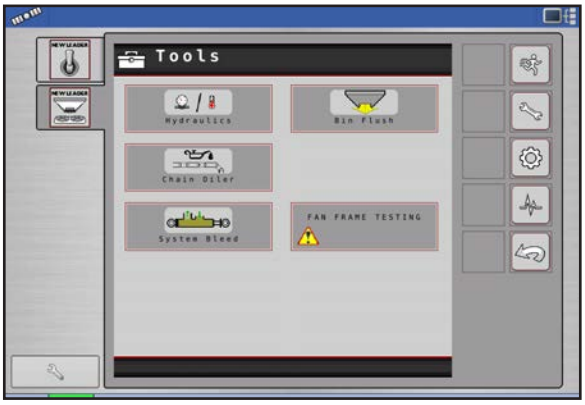

- The Tools main screen will appear. Press to continue.

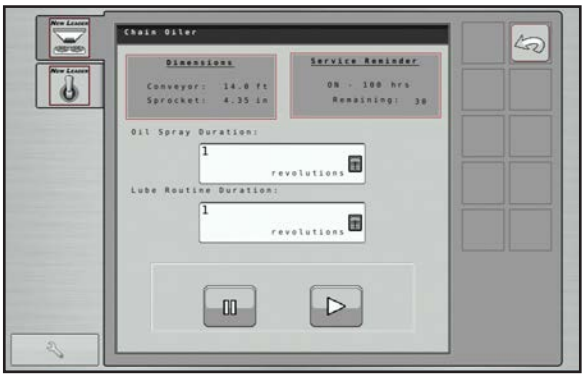

2. Set duration:
- Use keypads to set oil chain duration (recommended 1 revolution). Lube routine is not used at this time.

3. Set conveyor dimensions:
- Press “Dimensions” to input conveyor dimensions. Use keypads to input conveyor length and sprocket diameter.

  Press to return to Chain Oiler screen.

  Press to return to Tools Screen.

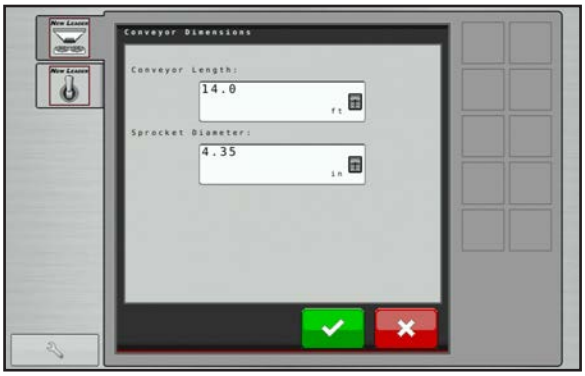

4. Set service reminder:
- Press “Service Reminder” to set chain oiler reminder. Enable Reminder and use keypad to enter interval hours desired. To restart reminder after manually oiling conveyor, press .

  Press to return to Chain Oiler Screen.

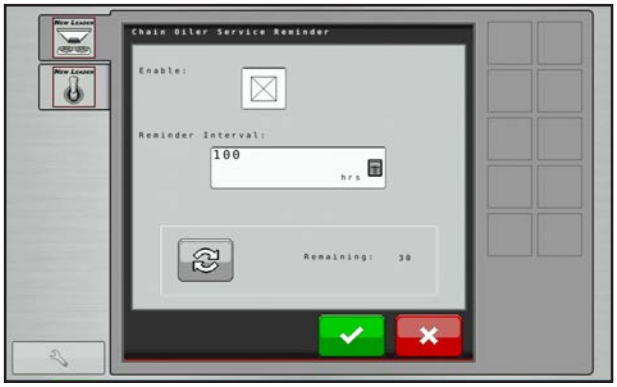

Bin Sequencing

NOTE:	This function allows the operator to run same product out of two bins, chaining them together so bin 2 starts emptying immediately after bin 1 is empty.

1. Power up Display Monitor and activate VT.

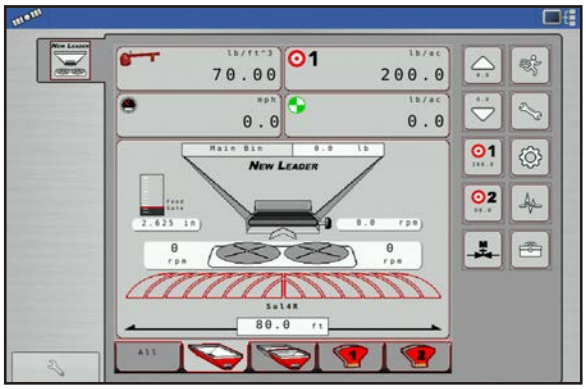

- The Run screen will appear. Press to continue.

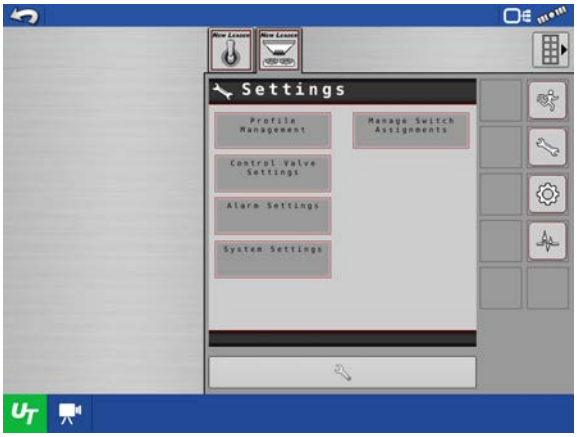

- The Tools main screen will appear. Press

to continue.

- Press the Bin Chaining tab at the bottom of the screen to continue.

2. Setup Bin Sequencing (Chaining):

A. Enable bin chaining for Bins 1 & 2, or Bins 3 & 4 as applicable.

B. Select trigger type (Manual Only, Low Bin Threshold, Low Bin Sensor, Container Reaches 0).

C. Select which bin to empty first by pressing arrow button until arrow points to second bin to empty. Figure at right shows Insert Bin emptying first and Main Bin second; Micro Bin 2 emptying first and Micro Bin 1 second.

Press to continue.

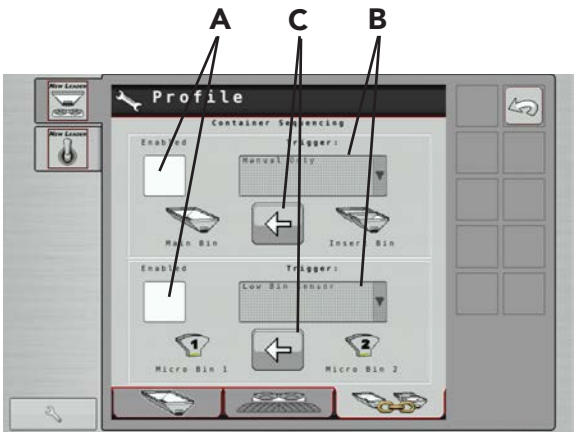

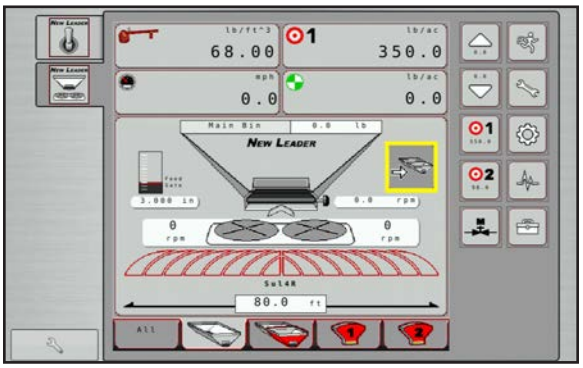

3. To manually switch bins:

- When Bin Sequencing is enabled, Manual Override button appears on Run Screen to force switch over to next bin.

General Alarms

Alarm	Title	Description
WSM Spreader Module	Local CAN Bus Error	Check the local CAN bus connection.
WSM Spreader Module	Module Software Reset	The module software reset due to an unhandled error.
WSM Spreader Module	Local CAN Bus Warning	Check the local CAN bus connection.
WSM Spreader Module	Local ISOBUS Error	Check the ISOBUS connections.
WSM Spreader Module	Local ISOBUS Warning	Check the ISOBUS connections.
WSM Spreader Module	CAN Power Voltage Low	The CAN power voltage is below 8.0 volts. Check CAN bus power supply.
WSM Spreader Module	High Power Voltage Low	The high power voltage is below 10.0 volts. Check high power supply connections.
WSM Spreader Module	Bin Not on Bus	Bin set as installed is not on bus. Check wiring or edit the profile.
WSM Spreader Module	Body Module Offline	The body module is no longer available. Check power supply and communication wiring.
WSM Spreader Module	Module Indexing Failure	System has not indexed itself properly. This can be caused by a missing index pin in the cabling.

General Product Control Alarms

Alarm	Description	Trigger
Rate sensor error during calibration	“Calibration error, lost or intermittent signal from rate sensor. Check sensor and related wiring prior to calibrating conveyor.”	Rate sensor signal is lost for a period of two or more consecutive seconds during the Static Conveyor Calibration Routine.
Rate Sensor Error During Conveyor Flush	"Lost or intermittent signal from rate sensor. Check sensor and related wiring prior to continuing Conveyor Flush Routine."	Rate sensor signal is lost for a period of two or more consecutive seconds during the Conveyor Flush Routine.
Low Bin Sensor	"Low Bin Sensor." [Channel Name].	Bin Level Sensor is installed, metering circuit is commanded on, and the product in the bin does not cover the sensor for a consecutive period of time greater than current [Low Bin Time Delay] setting.
Disable Spinners	"Manually disable or shut off the spinner hydraulic circuit."	At the beginning of the Static Conveyor Calibration and Conveyor flush routine.
Enable Spinners	"Return the spinner hydraulic control to a field ready condition. The spinners will now restart."	At the end of the Static Conveyor Calibration routine and Conveyor flush routine.
Boundary Spinner Not Responding	"Boundary Spinner Not Responding." + [Spinner Name].	Automatic control for spinners must be enabled. At least one conveyor must be commanded on. Perceived spinner speed is greater than 30RPM in error from the [Boundary Spreading Spinner RPM Offset].
Rate Not Responding	“Rate Not Responding” + [Channel Name].	Control channel is commanded on using automatic control mode. Application rate is +/- [Rate Not Responding Threshold] from target rate for a period of [Rate Not Responding Timeout] or more.
Maximum Conveyor Speed	“Conveyor At Maximum RPM, Slow Down” + [Channel Name].	Product channel is commanded on and conveyor is run at or above maximum speed for a period of 5 or more consecutive seconds.
Minimum Conveyor Speed	“Conveyor At Minimum RPM”, + [Channel Name].	Product channel is commanded on and conveyor is run at or below minimum speed for a period of 5 or more consecutive seconds.
Conveyor Not Responding	“Conveyor Running While Turned Off” + [Channel Name].	Product bin is commanded off and conveyor speed >0 and <1 RPM for a period of 30 or more consecutive seconds. Or conveyor speed is >=1 RPM for a period of 5 or more consecutive seconds.

Spinner Alarms

Alarm	Description	Trigger
CLF Basic Single Spinners Not Responding	“Spinners Not Responding”	Automatic control for spinners must be enabled. [CLF Mode] [Basic Single] must be selected. At least one product bin must be commanded on. Perceived spinner speed is greater than 30 rpm in error from [Target Spinner Speed] for a period of five consecutive seconds or longer.
CLF Basic Independent Spinners Not Responding	“Spinner Not Responding” + [Spinner Name]	enabled. [CLF Mode] [Basic Independent] must be selected. At least one product bin must be commanded on. Perceived spinner speed is greater than 30 rpm in error from [Target Spinner Speed] for a period of five consecutive seconds or longer.
Spinners Off	"Stop Application, Spinners Off!"	CLF is enabled, no spinner speed detected, one or more control channels is commanded on.
Spinners On	"Turn spinner switch off to prevent spinners from running!"	Upon system start up, [CLF Mode] enabled, spinner functionality switch detected in the ON position.

Hydraulic Alarms

Alarm	Description	Trigger
Conveyor Hydraulic Pressure Exceeds Maximum	"Conveyor Hydraulic Pressure Exceeds Maximum Operating Range."	Conveyor hydraulic pressure exceeds [Max Conveyor Hydraulics Pressure] setting for a period of five consecutive seconds or longer.
System Hydraulic Pressure Exceeds Maximum	"System Hydraulic Pressure Exceeds Maximum Operating Range."	System hydraulic pressure exceeds [Max System Hydraulics Pressure] setting for a period of five consecutive seconds or longer.
Hydraulic Fluid Level Low	"Hydraulic Fluid Level Low."	Hydraulic fluid level has fallen below lowest level tank sensor.
Hydraulic Fluid Temperature Below Minimum	"Hydraulic Fluid Temperature Below Minimum Operating Range."	Hydraulic temperature is below 65°F (18°C). Hydraulic fluid too cold to operate machine.
Hydraulic Fluid Temperature Exceeds Maximum	"Hydraulic Fluid Temperature Exceeds Maximum Operating Range."	Hydraulic temperature exceeds maximum operating range, greater than or equal to 200°F (93°C).
Hydraulic Filter Restriction Detected	"Hydraulic Filter Restriction Detected."	Hydraulic filter pressure is greater than or equal to 25 psi for five consecutive seconds or longer.

Bin Sequencing Alarms

Alarm	Description	Trigger
Container Advance	Moving to next container in the sequence.	At the point when the [Container Advance] criteria has been met.
End of Sequence	End of container sequence, do you wish to start the sequence from the beginning?	At the point the last container in the sequence has met the [Container Advance] criteria.

Chain Oiler Alarms

Alarm	Description	Trigger
Disable Spinners	Manually disable or shut off the spinner hydraulic circuit.	The point the user selects to run the chain oiler routine.
Enable Spinners	Return the spinner hydraulic circuit to a field ready condition.	The point the user exits the chain oiler routine.
Conveyor Lubrication Required	Conveyor Chain Lubrication Is Required.	[Service Reminder On] setting is enabled and [Service Reminder Interval] has expired.

Default Settings

NOTE: Compatible Insert Bin configurations vary per model. See "General Description" in Operations section of this manual for details.

Refer to "Dimensions & Capacities" in Operations section of this manual for capacities on all applicable bin configurations.

Pressure Transducer Settings	
Min PSI	0
Max PSI	5000
Min voltage	1
Max voltage	5

Spinner Settings	
PWM Frequency	50 Hz
Zero Flow Offset	30
PWM Gain	20

Spinner Settings	
PWM Frequency	30 Hz
Zero Flow Offset	
PWM Gain	

Calibration

CFR Values	
Bin	Value
Main Bin	0.256
Insert Bin	0.144
Yellow Micro Bin	0.038
Red Micro Bin	0.019

Control Valve Settings				
	Control Valve			
Control Variable	Main	Insert	Micro 1	Micro 2
Control Valve Type	Servo	Servo	Servo	Servo
Valve Response 1	40	40	40	40
Valve Response 2	8	8	8	8
Response Threshold	4.0	4.0	4.0	4.0
Allowable Error	1	1	1	1

Sensor Settings	
Encoder pulses	180 or 360 - verify by looking on encoder
Spinner pulses	4

Alarms

Alarm Settings				
Alarm Variable	Bin			
	Main (PSI)	Insert (PSI)	Micro 1 (PSI)	Micro 2 (PSI)
Min Conveyor Speed	5	5	3	3
Max Conveyor Speed	50	60	85	85
Max Conveyor Pressure - Std Hydraulics	2000	2000	-	-
Max Conveyor Pressure - HP Hydraulics	3400	2000		
Rate Responding Time	5	5	5	5
Rate Responding Threshold	30	30	30	30
Max System Pressure - Spinner	3100	-	-	-

This page is intentionally left blank.

⚠WARNING Use great caution while working around the spreader. Contact with spinners and other moving parts is very dangerous. Do not adjust while machinery is moving, wear eye protection and avoid discharge from spinners. Do not ride on moving spreader. Failure to comply with this requirement could result in death or serious injury.

A Catch Test is required prior to each season, before using a new product, or if a significant visible change has occurred with a product.

Catch Test

The CFR number, or cubic feet per revolution number, is a calibration number entered into the controller to determine rate output from the spreader's conveyor. A catch test is performed to verify accurate rate output per the controller.

NOTE: An optional calibration chute (P/N 312688) is available to simplify the catch test process. The calibration chute fits all New Leader spreader models with 30" wide conveyor bottoms. Contact your local New Leader dealer for details.

⚠WARNING To prevent injury, disable the spinners by unplugging the PWM valve before beginning the catch test procedure. Failure to comply with this requirement could result in death or serious injury.

1. Disable the spinners by unplugging the PWM valve(s).
2. Move the spinner assembly to the 4" (102mm) position.
3. Remove the Material Divider back plate, and Vane Assembly (if applicable). Install calibration chute if available.
4. Position an end loader or other suitable device beneath the spinners to catch material.
5. Load material into all applicable bins.
6. Prime the conveyor as specified per the controller.
   - If using a calibration chute, run the conveyor just until material reaches the end. Remove any excess material that falls into the catching device.
   - If not using a calibration chute, run the conveyor until the spinner discs are full of material. Remove any excess product from the catching device. Do not remove material from spinner discs.
7. Measure the depth of material on the end of the conveyor to verify the constant number feedgate height information entered into the controller. Adjust feedgate height or recalibrate feedgate as necessary.
8. Verify that all other product settings entered into the controller are correct.
9. Select the correct bin in the controller for the first bin to be tested. Enter the anticipated weight of product to be dispensed from the conveyor.
10. Start the engine and engage hydraulics. Allow to run for several minutes to bring hydraulic oil up to operating temperature. Bring engine up to operating RPM.
11. Following the setup wizard on the controller, run the catch test. The conveyor will start dispensing material, and automatically shut off when the estimated amount of product is dispensed.
12. If not using a calibration chute, leave the material on the spinner discs. Weigh the amount of product that the conveyor actually dispensed into the catching device, and note the result.
13. Enter the actual weight of material dispensed into the controller. The controller will then automatically perform the calibration.
14. Repeat Steps 5 - 12 for all other applicable bins, if an insert bin is installed.
15. Once satisfactory results have been achieved for all applicable bins, turn the engine off, replace the back plate on the Material Divider, return the spinner assembly to its original position setting, and plug the PWM valve(s) back in.

NOTE: For more information on controller operations and setup, contact your local dealer.

⚠WARNING	Use great caution while working around the spreader. Contact with spinners and other moving parts is very dangerous. Do not adjust while machinery is moving, wear eye protection and avoid discharge from spinners. Do not ride on moving spreader. Failure to comply with this requirement could result in death or serious injury.
NOTICE	Spinner assembly and material divider have NOT been adjusted at the factory. Before spreading material, spread pattern tests must be conducted to properly adjust the spread pattern. A spread pattern test kit is available for this purpose. THE MANUFACTURER OF THIS SPREADER WILL NOT BE HELD LIABLE FOR MISAPPLIED MATERIAL DUE TO AN IMPROPERLY ADJUSTED SPREADER.

Spread Pattern

Product quality will affect spread pattern and product performance. Spread pattern testing is required to ensure proper application of material. Larger products will produce wider swath widths.

Spread pattern is adjusted using one or more of the following:

- Point of material delivery on spinner discs
- Spinner speed
- Angle of the distributor fins on the spinner discs

Since adjustments will vary for each job, trial and experience must be used to determine the adjustments required to obtain the swath width and spread pattern desired.

Spread Pattern Test Kit

Spread Pattern Test Kit, part no. 313960, includes the following:

DESCRIPTION	QTY	DESCRIPTION	QTY
Box - Plastic Storage	1	Scale – Density	1
Center Collection Tray - Blue	1	Data Sheet – 100 Ct. Booklet	1
Collection Tray - Brown	22	Funnel	1
Divider Screen	23	Flag	5
Assy – Test Tube Rack	1	Rope – 120’ marked	1
Test Tube	23	Stake	2

NOTE: If desired, a material calibration kit is available to aid in measuring product quality. Contact your local dealer for details.

Spinners

NOTICE Spinner discs and fins must be kept clean and polished. Even a small build-up on a spinner fin can significantly affect the spread pattern. Rusty, rough, bent or worn fins will produce poor spread patterns.

In general, critical spinner speed will fall somewhere between 600 and 900 RPM. Spinner speed is adjusted by changing the settings in the controller. Proper spinner speed adjustment is critical in obtaining optimal spread patterns. The best spinner speed to use will depend entirely on the material being spread, and must be determined by testing.

Spreader Preparation

The spreader to be tested must be in good mechanical condition and properly adjusted. Refer to operator's manual for details.

All damaged and worn parts must be replaced. Spinner discs and fins must be free of any material build-up, rust or paint.

Fill the hopper with the material to be spread. Run the material out to the end of the conveyor.

Set the feedgate and the in-cab controller to deliver the required rate per acre. Make sure the feedgate is level and the indicator reflects the actual gate opening measured by standing a tape measure vertically in the material.

NOTE: Do not match slope of endgate when making this measurement. Measurement must be perpendicular to conveyor.

Adjust the spinner assembly by turning the crank or, if an actuator is installed, change the setting in the controller. To begin testing, position the spinner according to following chart.

Spread Pattern

NOTE: This chart is to be used as a reference only to begin testing.

			SIMPLE START SETTINGS			
Material	**Density**	**Ground Speed (mph)**	**Rate (lbs)**	**Feedgate (in)**	**Spinner Frame Setting**	**Spinner RPM**
Lime	90	11*	1000-5000	6	.5"	600
			2000-8000	12	.5"	600
Urea	46	18	110	2.5	4	800
			225	2.5	3.5	800
			450	2.5	2.5	800
Corn Blend	53	18	125	2.5	3.5"	800
			250	2.5	2.5"	800
			500	2.5	0.7	800
All other fertilizer types and blends	64	18	150	2.5	3.5"	800
			300	2.5	2.5"	800
			600	2.5	1.2	800
* 15 mph when using high performance (HP) hydraulics.						

Test Procedure

Using the data sheets supplied with the kit, document all spreader information and adjustments as necessary. See Figure 1.

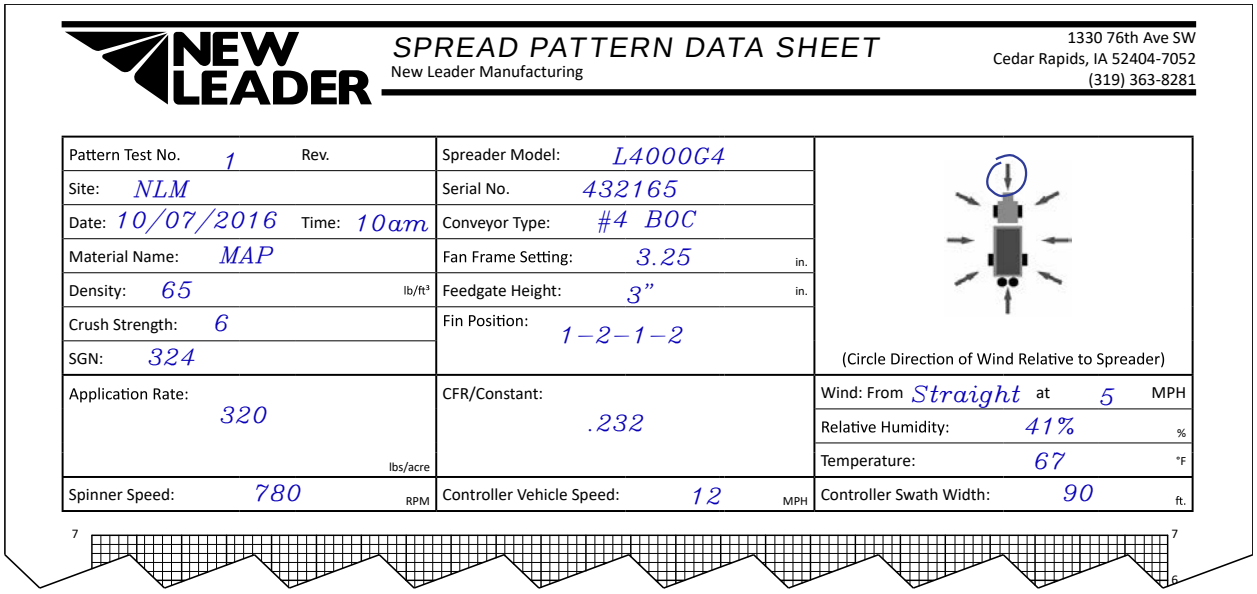

NEW LEADER

SPREAD PATTERN DATA SHEET

New Leader Manufacturing

1330 76th Ave SW
Cedar Rapids, IA 52404-7052
(319) 363-8281

Pattern Test No. 1 Rev.	Spreader Model: L4000G4	
Site: NLM	Serial No. 432165	
Date: 10/07/2016 Time: 10am	Conveyor Type: #4 BOC	
Material Name: MAP	Fan Frame Setting: 3.25 in.	
Density: 65 lb/ft³	Feedgate Height: 3" in.	
Crush Strength: 6	Fin Position: 1–2–1–2	
SGN: 324		(Circle Direction of Wind Relative to Spreader)
Application Rate: 320 lbs/acre	CFR/Constant: .232	Wind: From Straight at 5 MPH
		Relative Humidity: 41% %
		Temperature: 67 °F
Spinner Speed: 780 RPM	Controller Vehicle Speed: 12 MPH	Controller Swath Width: 90 ft.

7 7 6

Figure 1

Select an area for testing measuring at least 120 feet x 200 feet (37 m x 61 m), and with a slope of less than two degrees.

All testing should be done when the wind velocity is less than 5 MPH (8.05 km). If wind is present, testing must be done with spreader traveling parallel (within ± 15 degrees) to the wind direction.

Do not allow loaded spreader to sit for more than one hour prior to testing.

At this stage of testing, drive the spreader over the collection trays in ONLY ONE DIRECTION.

Insert a plastic grid into each of the 23 collection trays. Position the blue collection tray in the center of the spreader's path with the longest dimension of the tray parallel to the direction of travel. Position the first left-hand and right-hand trays 10' (3m) from center, and all subsequent trays on 5' (1.5m) centers.

Four-Wheeled Vehicles

For four-wheeled application vehicles, position the spreader at the beginning of the course so that the vehicle will straddle the center collection tray. See Figure 2.

Engage spinners before navigating the course. As the vehicle approaches the flag positioned 75' before the row of collection trays, engage the conveyor(s). Do not shut the conveyor(s) off until the vehicle approaches the second flag.

Drive spreader completely through course at normal operating speeds.

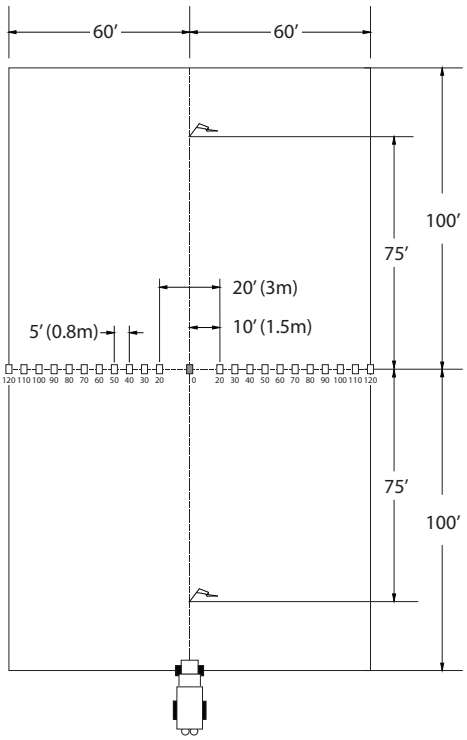

Figure 2 – Four-Wheeled Vehicles

Three-Wheeled Vehicles

For three-wheeled application vehicles, straddling the center tray is not possible. Place the center collection tray beneath the vehicle just behind the front tire when the spreader is in position at the beginning of the course. See Figure 3.

Engage both the spinners and conveyor(s) before navigating the course. Do not shut the conveyor(s) off until the vehicle approaches the second flag.

Drive spreader completely through course at normal operating speeds.

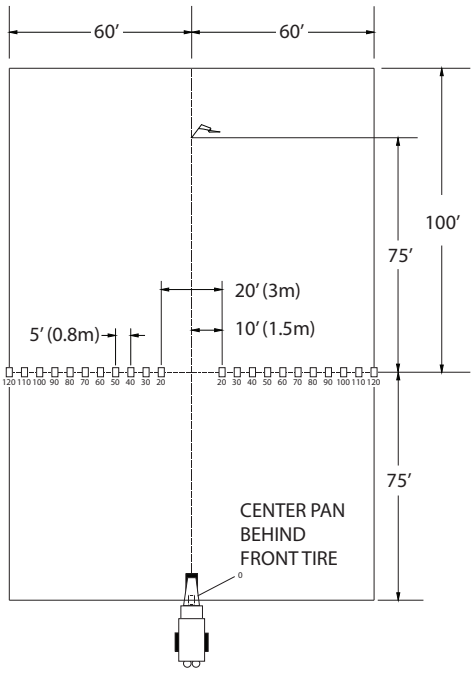

Figure 3 – Three-Wheeled Vehicles

Test Results

After navigating the course, shut the spreader down and park in a secure location.

Using the funnel, transfer the contents of each collection tray into its corresponding test tube beginning at one end of the trays and working towards the opposite end.

If spreading a blend of materials, inspect all tubes to determine if the blend is consistent across the entire swath width. If the blend is not consistent, use a narrower swath width. The swath width should be based on the material thrown the shortest distance.

Record each test tube's volume in the box on the data sheet under the corresponding tray position and graph the spread pattern profile. See Figure 4.

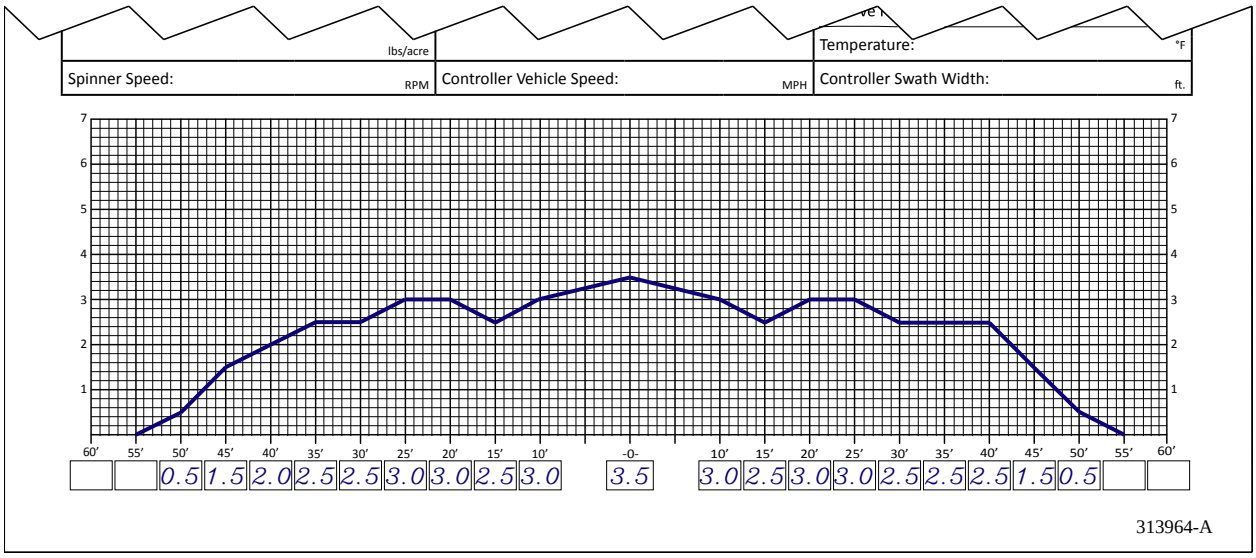

Figure 4

Looking at the material in the test tubes and the graphed profile on the data sheet, compare the overall shape of the spread pattern to the three acceptable patterns, shown in Figure 5. If an acceptable pattern has not been achieved, proceed to "Troubleshooting". Once an acceptable pattern has been achieved, proceed to "Determining Driving Centers".

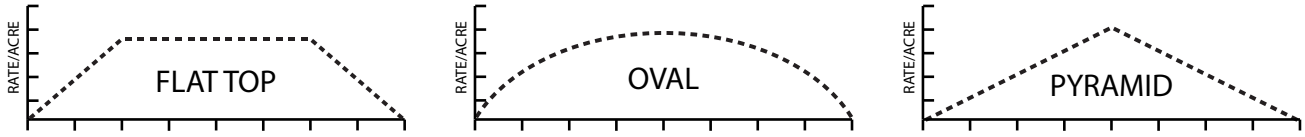

Figure 5 – Acceptable Patterns

Troubleshooting

NOTE: It is highly recommended that ONLY ONE ADJUSTMENT be made between test samples taken. If more than one adjustment is made, it will be difficult to determine which adjustment was responsible for the change in pattern shape.

Problem	Pattern	Recommended Adjustments
Heavy Directly Behind the Vehicle	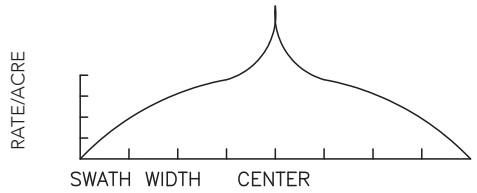	1. Move the spinner forward (toward the conveyor).
Light Directly Behind the Vehicle	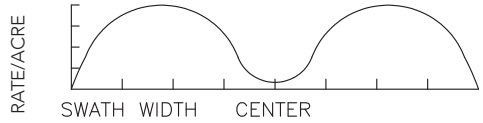	1. Move the spinner rearward (away from conveyor).
Light Outside Vehicle's Tire Tracks	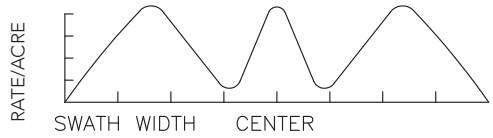	1. Check spinner fins for material buildup, rust or paint. 2. Increase spinner RPM. 3. Move spinner fins to 2 - 3 - 2 - 3 positions. See Figure below.
Pattern Off Center	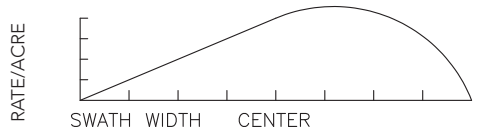	1. Check to see feedgate is level and free of caked material. 2. Make sure hillside divider spinner assembly and material divider are mounted squarely and centered. 3. Testing should be done parallel to wind.

Figure 6

Spinner fins are adjustable to radial angle as shown in Figure 7. Refer to Figure 6 for fin adjustment recommendations.

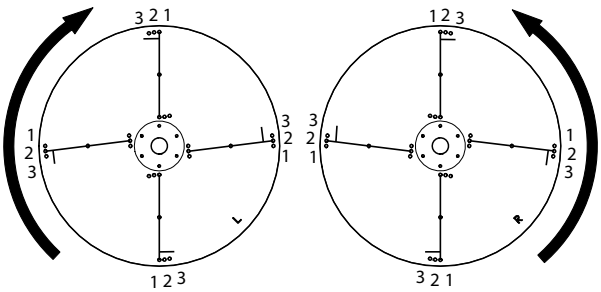

Figure 7 - Spinner Fin Adjustment

Determining Driving Centers

Once an acceptable pattern is obtained, as shown in Figure 5, driving centers can be determined. To determine optimum driving centers (effective swath width), determine the average amount of material in the center of the pattern. Figure 8 shows an example data sheet recorded from the profile shown in Figure 9. Based on the example, the average amount of material in the center of the pattern is 3.0, as indicated with the red dotted line.

Next, locate the points on both the left and right side of the pattern where the amount of material is half the average amount at the center of the pattern. In the example shown in Figure 8, these points are located 45' to the left of center, and 45' to the right of center. The distance between these two points (90') represents the driving centers to use.

NOTE: Once the effective swath width has been established, a change in the controller may be required.

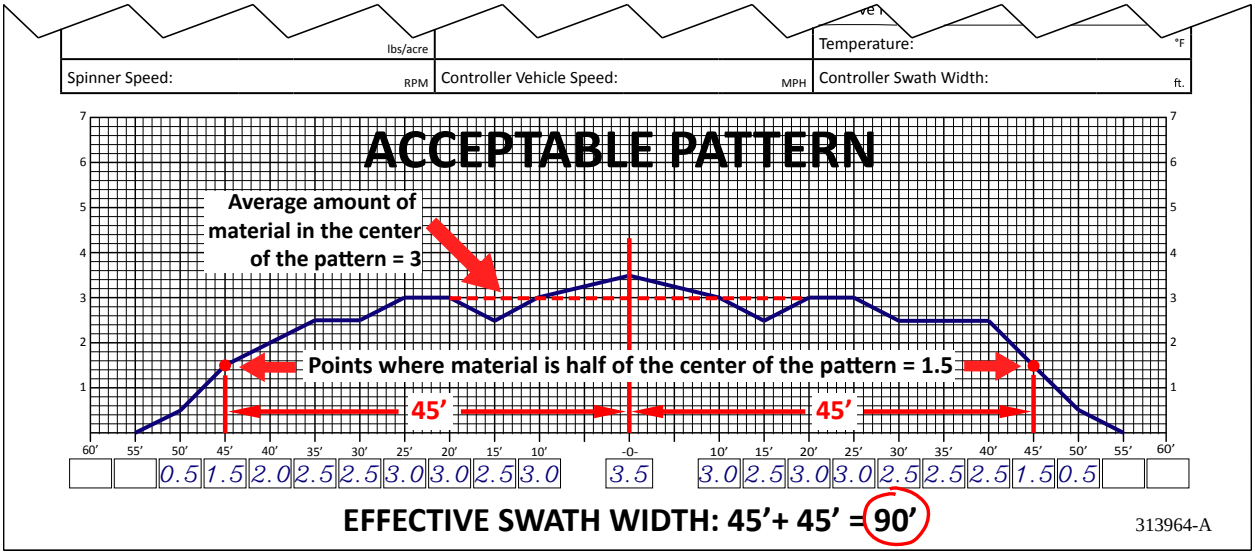

Figure 8 - Effective Swath Width

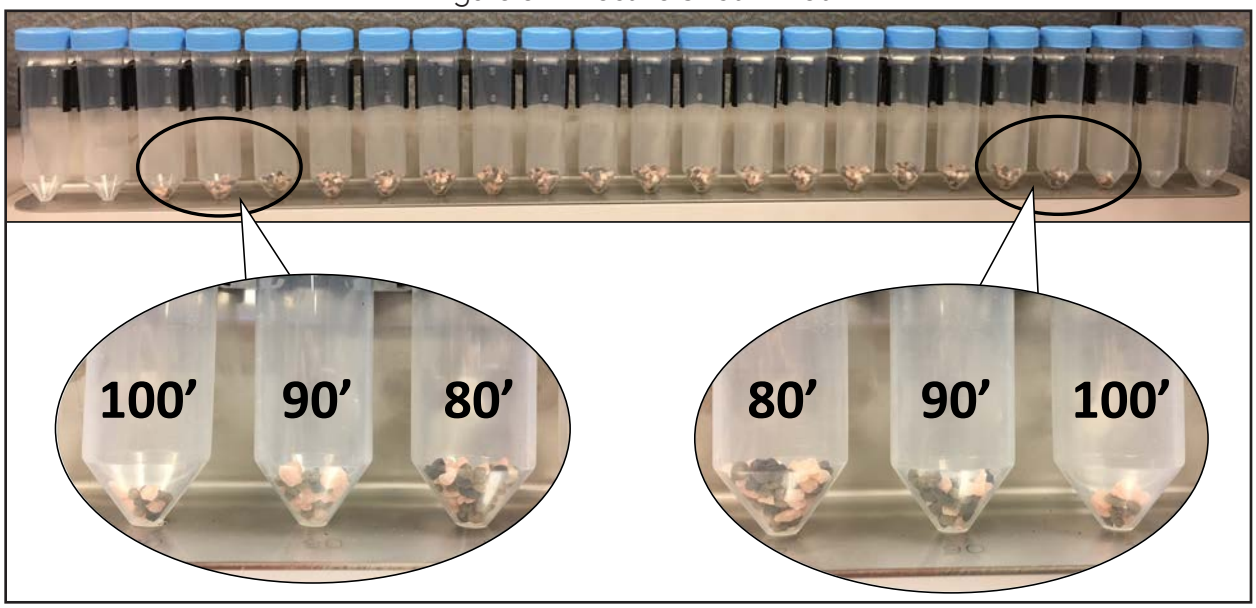

Figure 9

Verifying Driving Centers

Once optimum driving centers (effective swath width) have been established, conduct a final "S" pass over the trays to verify. Refer to Figure 10.

1. With both the spinners and conveyor turned off, drive the spreader through the center of the course, establishing an "AB" line. If the spreader vehicle is a three-wheel type, remove the center pan.
2. Line the vehicle up with either end of the row of collection trays, at a distance from the "AB" line equal to the effective swath width.
3. With both the spinner and conveyor engaged, drive past the trays.
4. Switch back and drive over the center of the trays, down the "AB" line.
5. Drive through the row of trays and switch back once again, driving past the trays on the opposite side, at an equal distance from the "AB" line as the first pass.

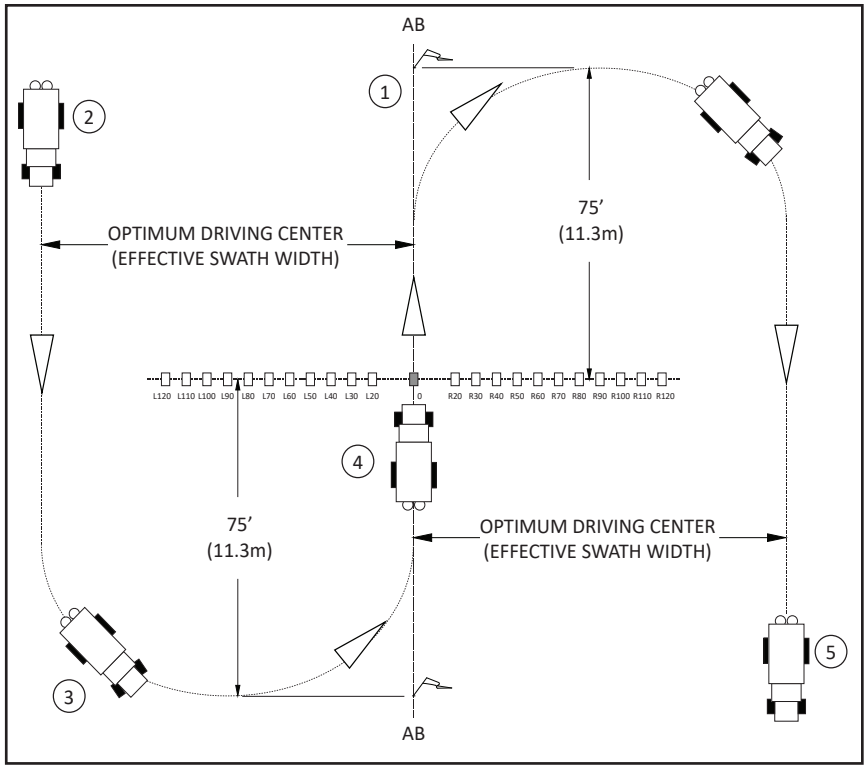

Figure 10

If the driving centers were determined correctly, all trays should have a similar amount of material, showing a near flat profile in the test tubes. If the trays near the center of the row contain more material than the others, increase driving centers. If the trays near the center of the row contain less material, decrease driving centers.

NOTE: If spreading a blend of materials, verify blend of all products is consistent across all tubes.