# NL450C
# Parts Manual

**UNIT SERIAL NUMBER _____**

**TR3000 SERIAL NUMBER_____**

**MANUAL NUMBER: 307306-AB-D**

**EFFECTIVE 03/2019**

NEW LEADER MANUFACTURING

**1330 76TH AVE SW**
**CEDAR RAPIDS, IA 52404-7052**
**PHONE (800) 363-1771 | FAX (319) 286-3350**
***www.newleader.com***

Copyright 2019 Highway Equipment Company, Inc.
Now doing business as New Leader Manufacturing

# Table of Contents


Interactive Features ....4
Instructions for Ordering Parts ....5
Body ....7
- Mounting ....7
- Sight Window ....8
- Lighting & Visibility ....10
- Fenders ....12

Endgate ....14
- Endgate Assembly ....14

Fenders ....15
Body Hydraulics ....16
- PTO Pump Hydraulics ....16
- Main Bin ....18
- Conveyor Hydraulics ....22
- Relief Valve Assy ....23
- Hydraulic Reservoir ....24
- Hydraulic Reservoir w/ Cooler ....26

Conveyor ....28
- Pintle Chain Conveyor ....28
- Chain Shield Hardware ....29
- Conveyor Idler ....30
- Conveyor Drive ....31
- Encoder ....34
- Conveyor Chain Oiler ....36
- Wiper - Front ....38
- Front Conveyor Guard ....39
- Enclosure Assembly Mount ....41
- Enclosure Assembly ....42
- Controller - Main Bin ....44
- Switch Box & Harness ....46
- Spinner Speed Sensors ....47

Decals ....48
Poly Floor ....50
Antislab Assembly ....51
Spinners ....53
- Spinner Assembly ....54

TR3000 ....58
- Tongue Assembly ....58
- Wheel End & Tires ....60
- Hydraulic Brakes ....62
- Walking Beam Suspension ....66
- Lubrication ....67
- Safety Decals ....68

This page is intentionally left blank.

| | |
|---|---|
| **NOTE:** | This manual incorporates several interactive features to provide supplemental information and ease of navigation. The information below is to aid in the identification and use of these features. |

**Hyperlinks**

Hyperlinks provide direct access to a specific destination when clicked. The entire Table of Contents of this manual is hyperlinked to provide quick access to all sections of this manual when viewing the electronic version.

Hyperlinks within the content are denoted by **blue, bold underlined text**. Electronic format viewers can click these links for direct access to New Leader online features. Internet access is required.

**Quick Reference (QR) Codes**

Quick reference codes provide direct access to a specific destination when activated. An example is provided below. In the printed version of this manual, viewers may scan the codes with a supporting mobile device for direct access to New Leader online features. Mobile data is required.

The electronic version of this manual provides the option to scan codes on-screen, or to click the code like a button. Internet access/mobile data is required.

# Instructions for Ordering Parts

NEW LEADER MANUFACTURING

Order from the **AUTHORIZED DEALER** in your area.

Always give the pertinent model and serial number.

Give part name, part number and the quantity required.

Give the correct address to where the parts are to be shipped, and the carrier if there is a preference.

Unless claims for shortages or errors are made immediately upon receipt of goods they will not be considered. Any part returns should be directed through the dealer from which they were purchased.

When broken goods are received, a full description of the damage should be made by the carrier agent on the freight bill. If this description is insisted upon, full damage can always be collected from the transportation company.

No responsibility is assumed for delay or damage to merchandise while in transit. Our responsibility ceases upon delivery of shipment to the transportation company from whom a receipt is received showing that shipment was in good condition when delivered to them, therefore, claims (if any) should be filed with the transportation company and not with New Leader Manufacturing.

If your claims are not being handled (by the transportation company) to your satisfaction, please call our Product Sales & Support Department at New Leader Manufacturing at (800) 363-1771 for assistance.

In the parts list the following symbols and abbreviations stand for:

* - Not Shown
AR – As Required
CS – Carbon Steel
SS – Stainless Steel
NS – Not Serviced

The parts listed under the different steel types (CS, 409 SS and 304 SS) are for that type of unit and do not necessarily mean the part is made of that type of steel.

This page is intentionally left blank.

# Body Mounting

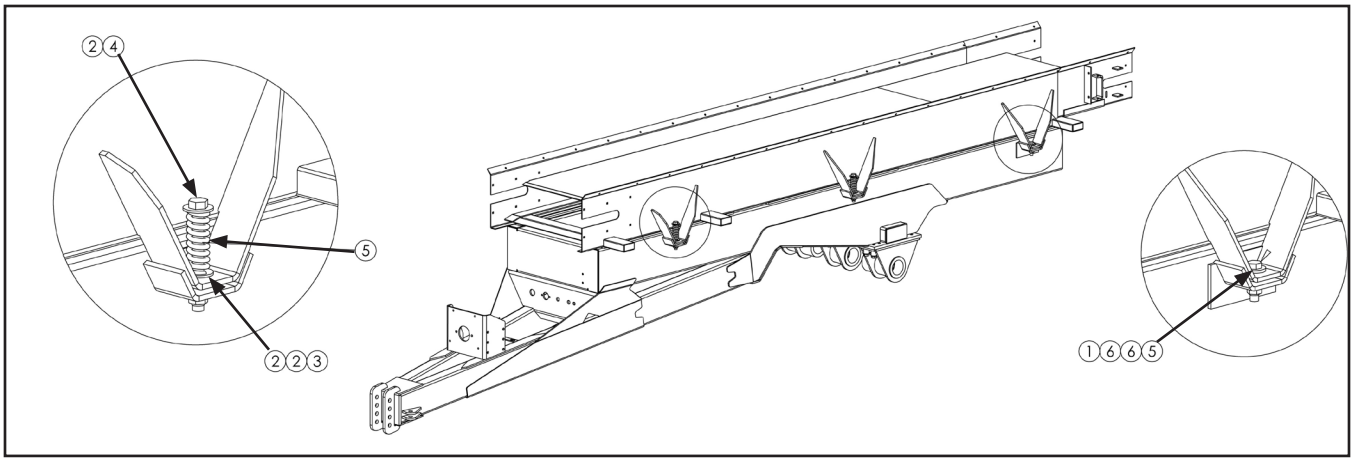


| ITEM | PART NO. | DESCRIPTION | QTY |
|---|---|---|---|
| 1 | 20683 | Spring - Compression | 4 |
| 2 | 58560 | Capscrew - .75-10NC X 7 | 12 |
| 3 | 20698 | Washer - Flat .75 | 6 |
| 4 | 305220 | Spring - Compression | 4 |
| 5 | 20209 | Capscrew - .75-10NC X 3 | 2 |
| 6 | 310487 | Washer - Flat .781 x 2 304 | 4 |

# Body

## Sight Window

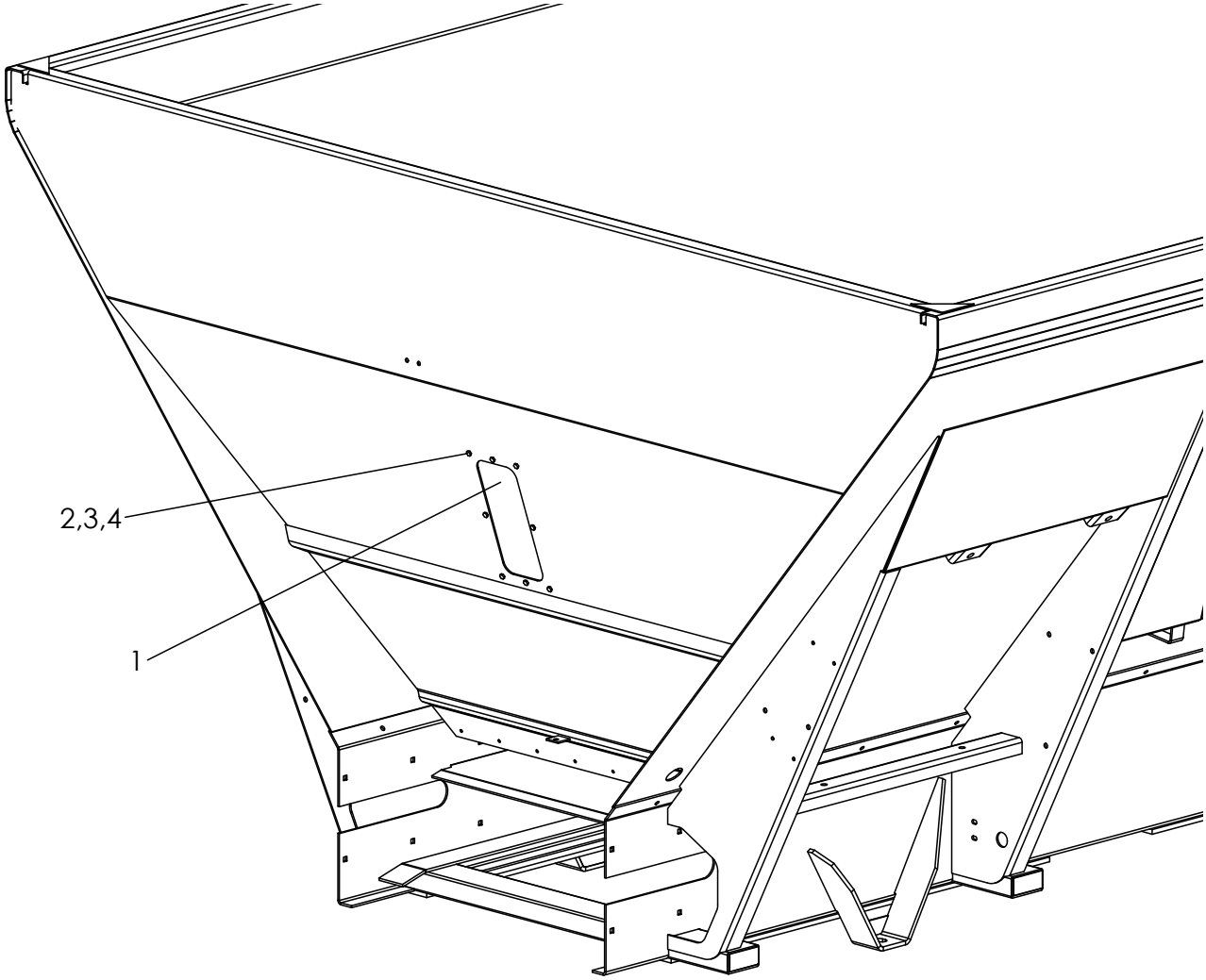


| ITEM | PART NO. | DESCRIPTION | QTY |
|---|---|---|---|
| 1 | 302686 | Window - Sight 5 x 12 | 1 |
| 2 | 42034 | Nut - Lock 1/4 SS | 8 |
| 3 | 36395 | Cap Screw - 1/4-20 x 1 SS | 8 |
| 4 | 36423 | Washer - Flat 1/4 SS | 8 |

This page is intentionally left blank.

# Body

## Lighting & Visibility

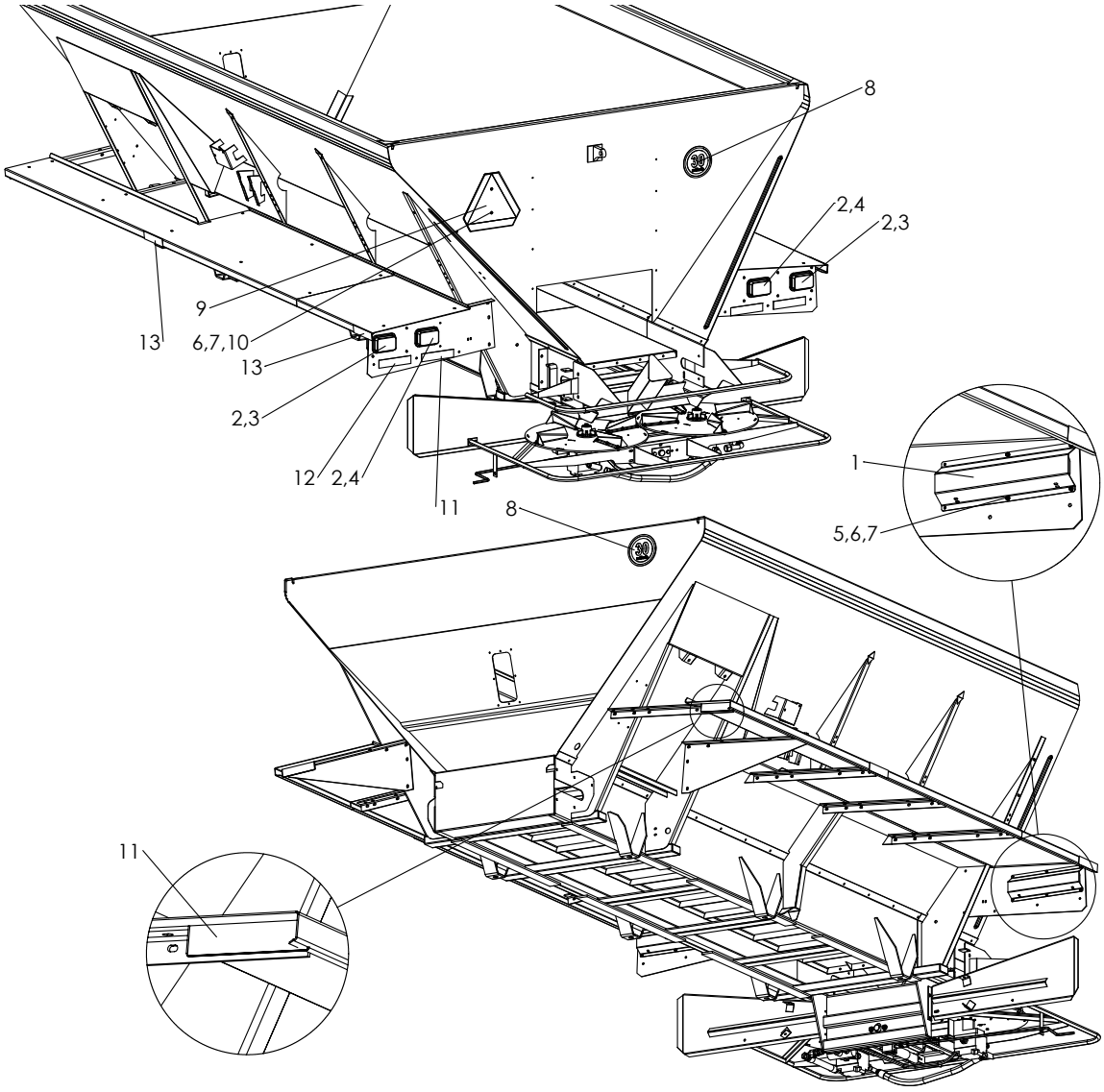

# Body

## Lighting & Visibility Cont.

| ITEM | PART NO. | DESCRIPTION | QTY |
|---|---|---|---|
| | 305186 | Kit - Reflective Farm Implement, Includes 11-13 | 1 |
| 1 | 305213 | Guard - Tail Light 304 | 2 |
| 2 | 304704 | Grommet - Super 45 | 4 |
| 3 | 304715 | Light - Super 45 Amber | 2 |
| 4 | 300150 | Light STT Red | 2 |
| 5 | 36393 | Cap Screw - 1/4-20NC x 3/4 SS | 12 |
| 6 | 36418 | Washer - Lock 1/4 SS | 14 |
| 7 | 36412 | Nut - Hex 1/4-20NC SS | 14 |
| 8 | 305273 | Decal - 30 MPH | 2 |
| 9 | 305229 | Sign - S.M.V. | 1 |
| 10 | 32446 | Screw - Truss Head 1/4-20NC x 3/4 SS | 2 |
| 11 | 306430 | Orange - Flourescent 2" x 9" | 2 |
| 12 | 317781 | Red - Reflective 2" x 25' | 1.5 |
| 13 | 317782 | Yellow - Reflective 2" x 25' | 4.5 |
| 14 | *305414-AB | Harness - LH Lights TR-3000 | 1 |
| 15 | *305414-AC | Harness - RH Lights TR-3000 | 1 |
| * - Not Shown | | | |

# Body

## Fenders

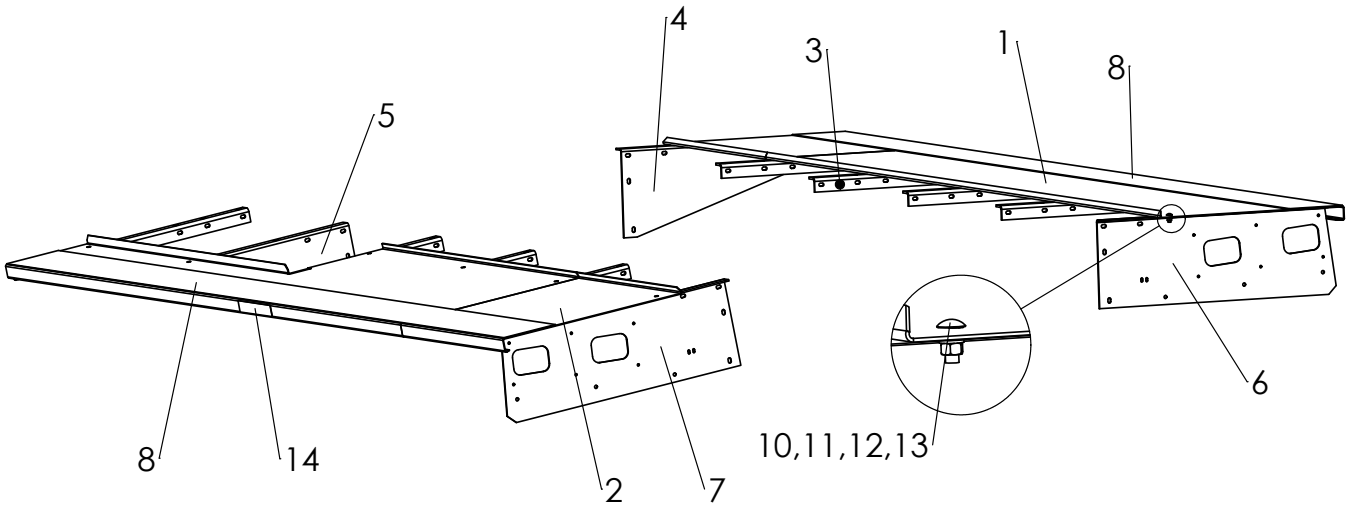


| ITEM | PART NO. | | DESCRIPTION | QTY |
|---|---|---|---|---|
| | CS | SS | | |
| 1 | 83074 | 83086 | Fender – RH | 1 |
| 2 | 83077 | 83089 | Fender – LH | 1 |
| 3 | 83021 | 96969 | Angle – Mounting | 8 |
| 4 | 83017 | 96965 | Formed Angle – RH | 1 |
| 5 | 83018 | 96966 | Formed Angle – LH | 1 |
| 6 | 306365-X1 | 306365-X2 | Support - Fender RH | 1 |
| 7 | 306366-X1 | 306366-X2 | Support - Fender LH | 1 |
| 8 | 21699 | 21699 | Material – Non-Skid, 8" Wide Length | AR(2) |
| 9 | *305276 | *305276 | Angle - Decal Mount | 2 |
| 10 | 20693 | 36425 | Washer – Flat 3/8 | 52 |
| 11 | 20712 | 36420 | Washer – Lock 3/8 | 52 |
| 12 | 20644 | 36414 | Nut – Hex 3/8 | 52 |
| 13 | 20318 | 36408 | Bolt – Carriage 3/8 x 1 | 52 |
| 14 | 39200 | 39200 | Decal - Keep Off | 2 |

* - Not Shown

This page is intentionally left blank.

## Endgate Assembly

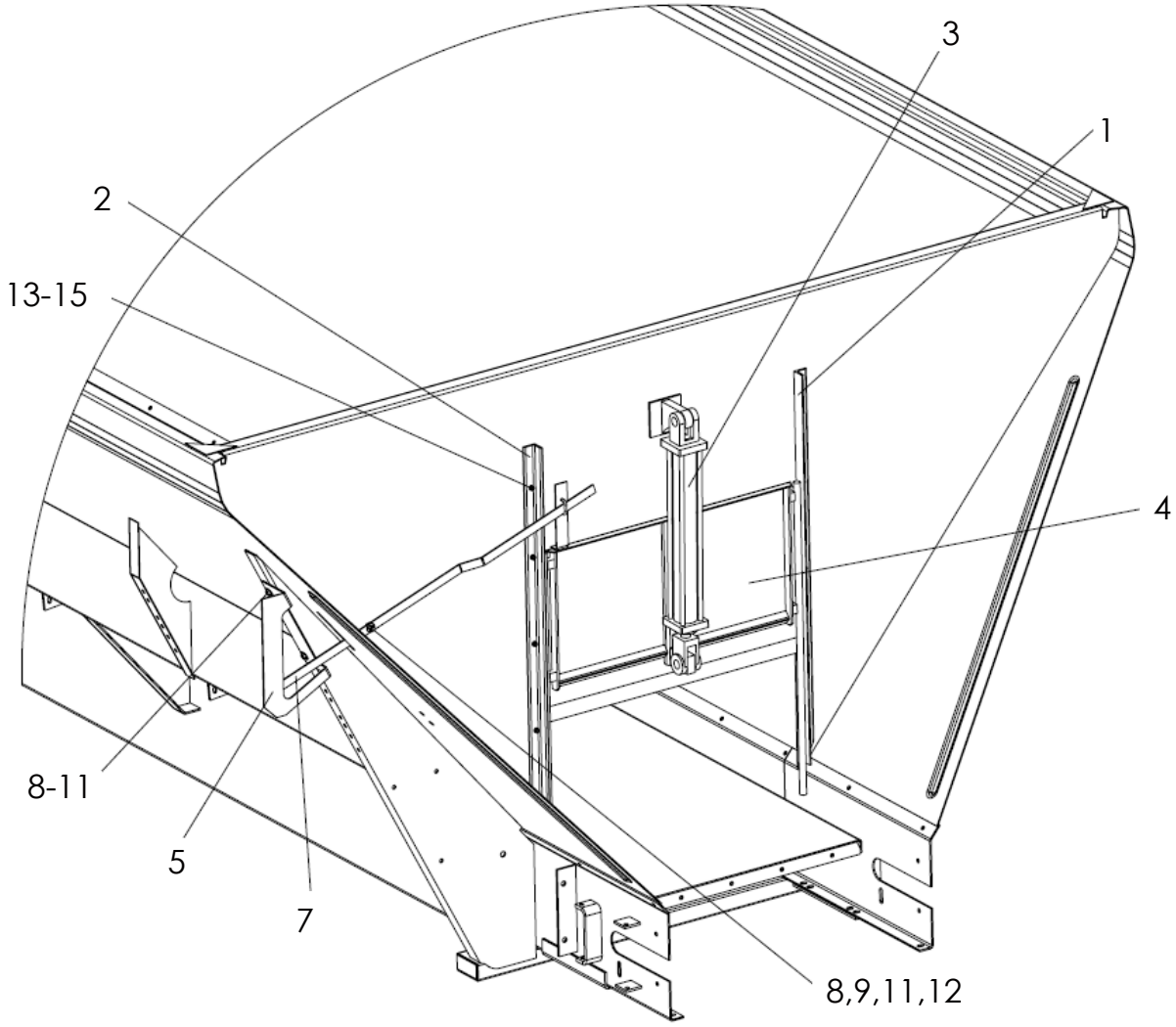

# Endgate

## Endgate Assembly Cont.

| ITEM | PART NO. | | DESCRIPTION | QTY |
|---|---|---|---|---|
| | CS | SS | | |
| 1 | 70286 | 70286-X1 | Slide – Weldment Feedgate RH | 1 |
| 2 | 70288 | 70288-X1 | Slide – Weldment Feedgate LH | 1 |
| 3 | 55377 | 55377 | Cylinder – Hydraulic | 1 |
| 4 | 305473 | 303298 | Feedgate – Weldment 34" #2 | 1 |
| 5 | 303379 | 303325 | Bracket – Indicator | 1 |
| 6 | *55395 | *55395 | Decal – Indicator | 1 |
| 7 | 303324 | 303323 | Indicator – Feedgate | 1 |
| 8 | 20068 | 36399 | Cap Screw – 3/8-16 x 1-1/4 | 3 |
| 9 | 20693 | 36425 | Washer – Flat 3/8 | 6 |
| 10 | 20712 | 36420 | Washer – Lock 3/8 | 2 |
| 11 | 20644 | 36414 | Nut – Hex 3/8-16 | 3 |
| 12 | 20678 | 72054 | Nut – Lock 3/8-16 | 1 |
| 13 | 20003 | 36393 | Cap Screw – 1/4-20 x 3/4 | 11 |
| 14 | 20710 | 36418 | Washer – Lock 1/4 | 11 |
| 15 | 20642 | 36412 | Nut – Hex 1/4-20 | 11 |
| * - Not Shown | | | | |

## PTO Pump Hydraulics

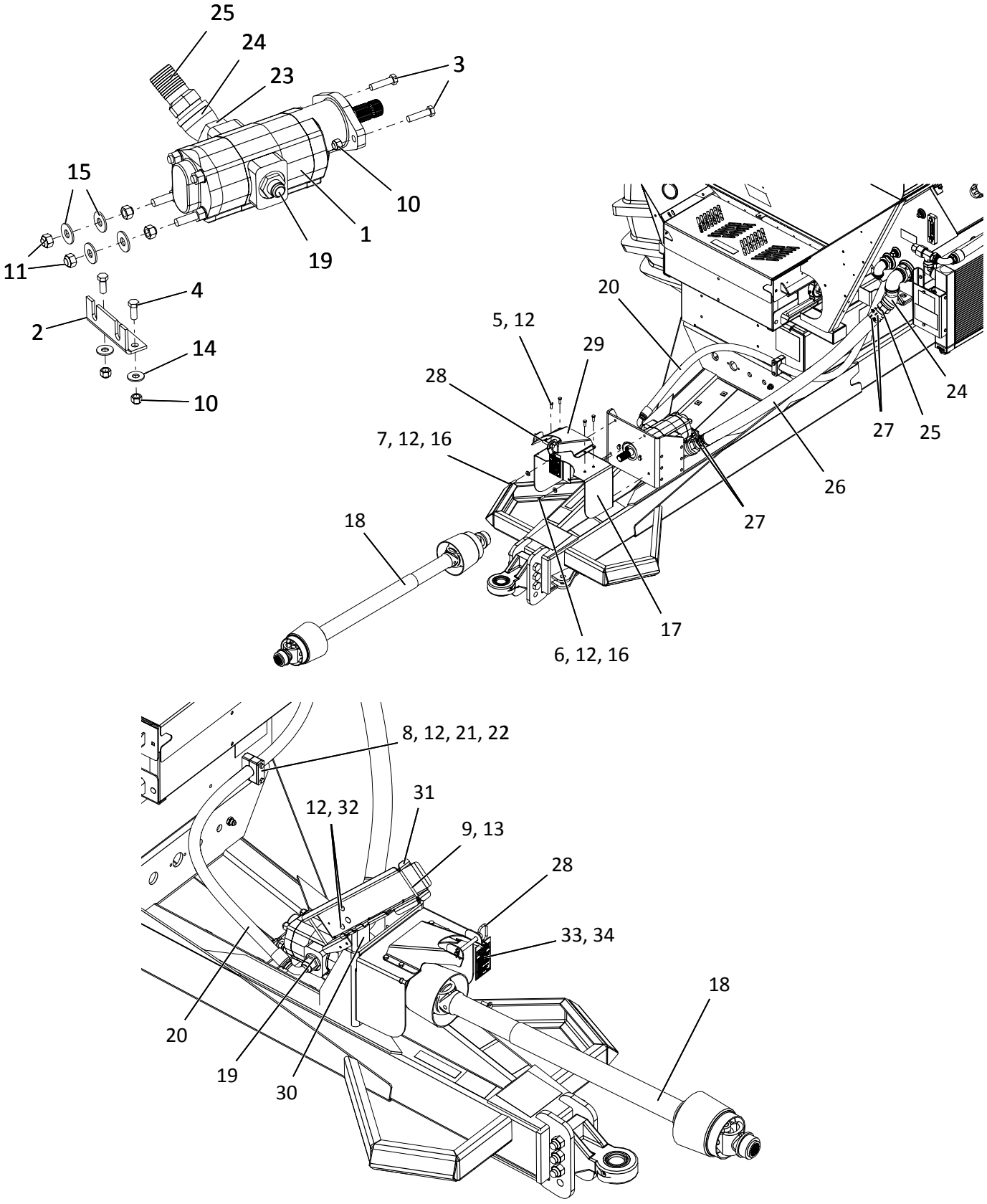

# Body Hydraulics

## PTO Pump Hydraulics Cont.

| ITEM | PART NO. | DESCRIPTION | QTY |
|---|---|---|---|
| 1 | 304921 | Hydraulic Pump | 1 |
| 2 | 305173 | Support - Pump | 1 |
| 3 | 20131 | Cap Screw - 1/2-13NC x 2 | 2 |
| 4 | 20128 | Cap Screw - 1/2-13NC x 1-1/4 | 2 |
| 5 | 20067 | Cap Screw - 3/8-16NC x 1 | 4 |
| 6 | 20068 | Cap Screw - 3/8-16NC x1-1/4 | 2 |
| 7 | 20069 | Cap Screw - 3/8-16NC x1-1/2 | 2 |
| 8 | 20077 | Cap Screw - 3/8-16NC x 3-3/4 | 2 |
| 9 | 20056 | Cap Screw - 3/8-16NC x 6 | 2 |
| 10 | 20680 | Nut - Lock 1/2-13NC | 4 |
| 11 | 20682 | Nut - Lock 5/8-11NC | 4 |
| 12 | 20678 | Nut - Lock 3/8-16NC | 13 |
| 13 | 20677 | Nut - Lock 5/16-18NC | 2 |
| 14 | 20695 | Washer - Flat 1/2 | 2 |
| 15 | 20697 | Washer - Flat 5/8 | 4 |
| 16 | 20693 | Washer - Flat 3/8 | 4 |
| 17 | 307300 | Guard - PTO | 1 |
| 18 | 307294 | Driveline - CV | 1 |
| 19 | 34845 | Adapter | 1 |
| 20 | 307305 | Hose - 1" x 96 100R12 | 1 |
| 21 | 305255 | Clamp - Hose 1-1/2 | 1 |
| 22 | 305257 | Plate - Cover | 1 |
| 23 | 305261 | Adapter - 2.5 SAE x 2 NPT | 1 |
| 24 | 305241 | Elbow - 2 NPT 45° Street | 2 |
| 25 | 29811 | End - Hose 2 NPT x 2 Hose | 2 |
| 26 | 313877 | Hose - 2" x 96 100R4 | 1 |
| 27 | 22380 | Clamp - Hose | 4 |
| 28 | 305228 | Pin - Hitch | 1 |
| 29 | 307302 | Retainer - PTO | 1 |
| 30 | 312885 | Angle - Upright | 1 |
| 31 | 313843 | Channel - Hose Guide | 1 |
| 32 | 20318 | Bolt - Carriage 3/8-16NC x 1 | 3 |
| 33 | 308221 | Wire Tie - 4 Black | 1 |
| 34 | 307322 | Tag - Notice, To Avoid Machine Damage | 1 |

# Body Hydraulics
## Main Bin

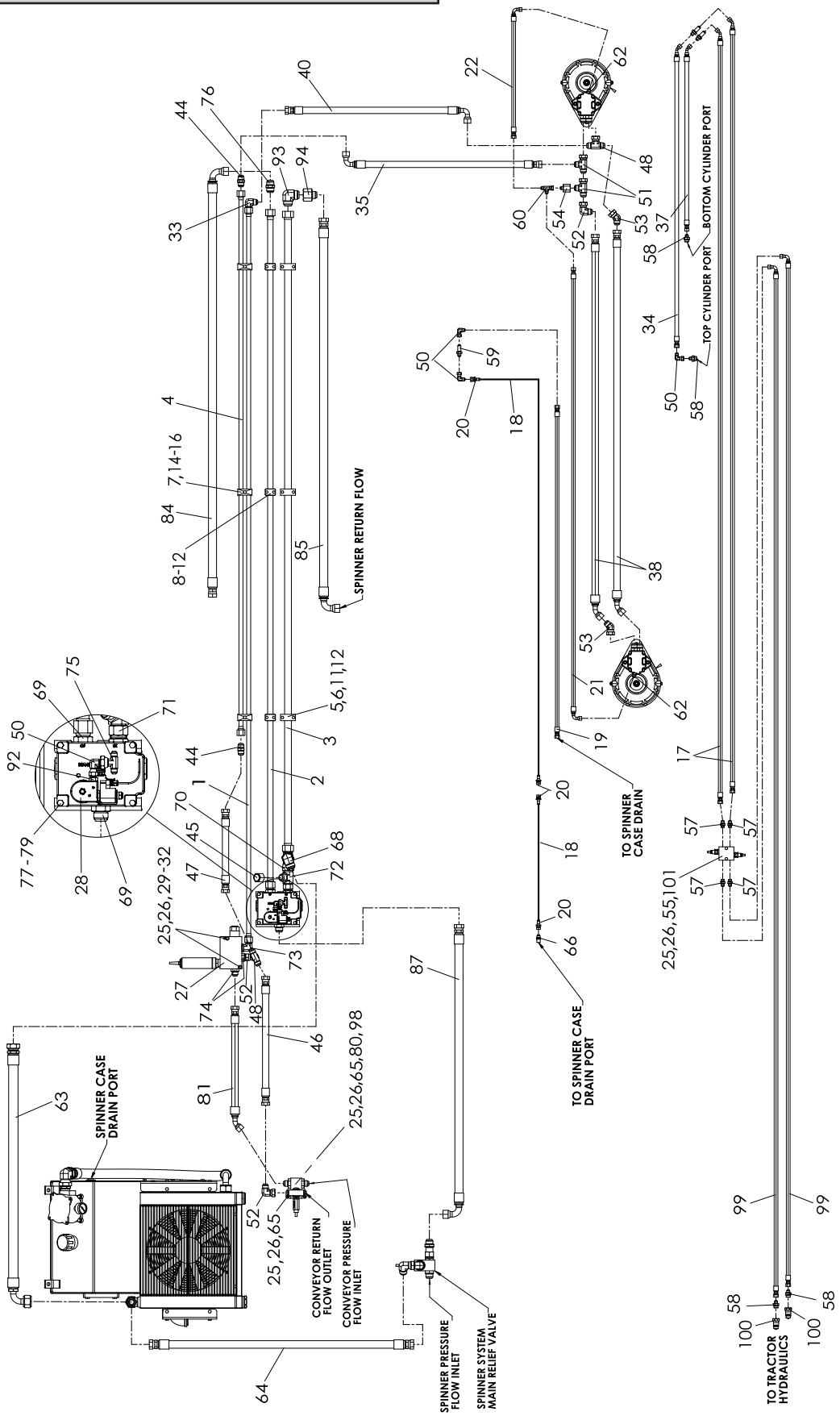

# Body Hydraulics

## Main Bin

| ITEM | PART NO. | DESCRIPTION | QTY |
|---|---|---|---|
| 1 | 305504-AD | Tube – Assembly 16’ | 1 |
| 2 | 315795 | Tube – Assembly 16’ | 1 |
| 3 | 305502-AD | Tube – Assembly 16’ | 1 |
| 4 | 304231 | Tube - Assembly 16’ | 1 |
| 5 | 96925 | Plate – Top 1-1/4 Tube | 3 |
| 6 | 96926 | Clamp – Pair 1-1/4 Tube | 3 |
| 7 | 75036 | Clamp - Pair 3/4 Tube | 3 |
| 8 | 86557 | Clamp – Pair 1 Tube | 3 |
| 9 | 86556 | Plate – Top 1 Tube | 3 |
| 10 | 34865 | Cap Screw – 1/4 x 2-1/4 | 6 |
| 11 | 36412 | Nut – Hex 1/4-20NC | 16 |
| 12 | 36418 | Washer – Lock 1/4 SS | 16 |
| 13 | 36396 | Cap Screw – 1/4 x 3 SS | 6 |
| 14 | 71830 | Cap Screw - 5/16-18NC 2-1/2 SS | 3 |
| 15 | 36413 | Nut - Hex 5/16-18NC SS | 3 |
| 16 | 36419 | Washer - Lock 5/16 SS | 3 |
| 17 | 305528 | Hose – Assembly 16’ | 2 |
| 18 | 34195 | Hose - Drain Line 3/8 x 270 | 14 |
| 19 | 96338-X1 | Hose - Drain Line 3/8 x 61-19/32 | 1 |
| 20 | 34761 | FItting - Socketless 3/8 x 9/16 JIC | 4 |
| 21 | 97315 | Hose - Assy 3/8 x 7’ 100R1 | 1 |
| 22 | 305531 | Hose - Assy 3/8 x 2’ 100R1 | 1 |
| 25 | 36412 | Nut - Hex 1/4 - 20NC SS | 10 |
| 26 | 36418 | Washer - Lock 1/4 SS | 12 |
| 27 | 306278 | Valve - Assy Control 25 GPM SFP | 1 |
| 28 | 38576-X4 | Valve – PWM | 1 |
|  | 38576-AH<br>**38576-BA | Seal Kit<br>Kit - Pilot Conversion |  |
| 29 | 302097 | Washer – Step | 2 |
| 30 | 302098 | Washer – Step | 2 |
| 31 | 56396 | Cap Screw – 1/4-20 x 3-1/4 | 2 |
| 32 | 36423 | Washer – Flat 1/4 SS | 4 |

# Body Hydraulics

## Main Bin

| ITEM | PART NO. | DESCRIPTION | QTY |
|---|---|---|---|
| 33 | 29785 | Fitting – 12-12 070201 | 1 |
| 34 | 305521 | Hose - Assembly 3/8 x 48-3/4 100R1 | 1 |
| 35 | 88315 | Hose – Assembly 3/4 x 3' 100R12 | 1 |
| 37 | 304907-X1 | Hose - Assembly 3/8 x 31 100R1 | 1 |
| 38 | 305752 | Hose – Assembly 3/4 x 71-1/2 100R12 | 2 |
| 40 | 98710-X2 | Hose – Assembly 3/4 x 33-1/2 100R12 | 1 |
| 44 | 29817 | Fitting – 12-12 070101 | 2 |
| 45 | 29802 | Fitting - 16 070112 | 1 |
| 46 | 56132 | Hose Assembly - 3/4 x 2' 100R2 | 1 |
| 47 | 58960 | Hose Assembly - 3/4 x 15-1/2 100R2 | 1 |
| 48 | 29809 | Fitting – 12-12-12 070433 | 2 |
| 50 | 34816 | Fitting - 6-6 070221 | 4 |
| 51 | 29781 | Fitting - 12-12-12 070432 | 2 |
| 52 | 34709 | Fitting - 12-12 070221 | 3 |
| 53 | 29782 | Fitting - 12-12 070321 | 2 |
| 54 | 56407 | Fitting - 12-6 070123 | 1 |
| 55 | 310452 | Valve - Cross Relief 1000 PSI | 1 |
| 57 | 29824 | Fitting - 6-6 070120 | 5 |
| 58 | 84246 | Fitting - 6-8 070120 | 4 |
| 59 | 305514 | Fitting - 6-6 070601 | 3 |
| 60 | 98724 | Fitting - 6-6-6 070432 | 1 |
| 62 | 34757 | Fitting - 6-4 070120 | 2 |
| 63 | 98662-X1 | Hose Assembly - Return 1-1/4 x 73 | 1 |
| 64 | 82377-X2 | Hose Assembly - Return 1 x 48-5/8 | 1 |
| 65 | 36393 | Cap Screw - 1/4-20 x 3/4 SS | 4 |
| 66 | 29766 | Fitting - 6-6 070102 | 1 |
| 68 | 98568 | Fitting - 20-20 070123 | 1 |
| 69 | 29803 | Fitting – 16-16 070120 | 2 |
| 70 | 96909 | Tee – Run | 1 |
| 71 | 34810 | Fitting – 16-16 S1040-30 Non Standard | 1 |
| 72 | 96912 | Tee – Union | 1 |

# Body Hydraulics

## Main Bin

| ITEM | PART NO. | DESCRIPTION | QTY |
|---|---|---|---|
| 73 | 29847 | Fitting – 12-12 070220 | 1 |
| 74 | 29789 | Fitting – 12-12 07120 | 2 |
| 75 | 29825 | Fitting – 6-6-6 070433 | 1 |
| 76 | 34719 | Fitting – 16-16 070101 | 1 |
| 77 | 42794 | Cap Screw – 5/16 x 3-3/4 SS | 4 |
| 78 | 36413 | Nut – Hex 5/16-18NC | 6 |
| 79 | 36419 | Washer – Lock 5/16 | 6 |
| 80 | 310459 | Valve - Assembly, Relief 3400 PSI | 1 |
| 81 | 310458 | Hose Assembly - 3/4 x 23 100R12 | 1 |
| 82 | 34580 | Cap Screw - 5/16-18NC x 1 SS | 2 |
| 83 | 36424 | Washer - Flat 5/16 SS | 2 |
| 84 | 56441 | Hose Assembly 1 x 86 100R12 | 1 |
| 85 | 95958 | Hose Assembly 1 x 72.7 100R2 | 1 |
| 86 | | Not Used | |
| 87 | 305524 | Hose Assembly - 1" x 50" 100R12 | 1 |
| 88 | *96906 | Sleeve - Abrasive | 4 |
| 89 | | Not Used | |
| 90 | | Not Used | |
| 91 | | Not Used | |
| 92 | 34757 | Fitting - 6-4 070120 | 1 |
| 93 | 56279 | Fitting - 20-20 070201 | 1 |
| 94 | 34819 | Fitting - 20-16 070123 | 1 |
| 95 | | Not Used | |
| 96 | | Not Used | |
| 98 | 310451 | Plate - Valve | 1 |
| 99 | 310457 | Hose - Assembly 3/8 x 192 100R1 | 2 |
| 100 | 305262 | Nipple - QD 1/2 AG, 8 ORB | 2 |
| 101 | 41669 | Cap Screw - 1/4-20NC x 1-3/4 SS | 2 |

* - Not Shown ** - Use to convert Style B valve to current Style A

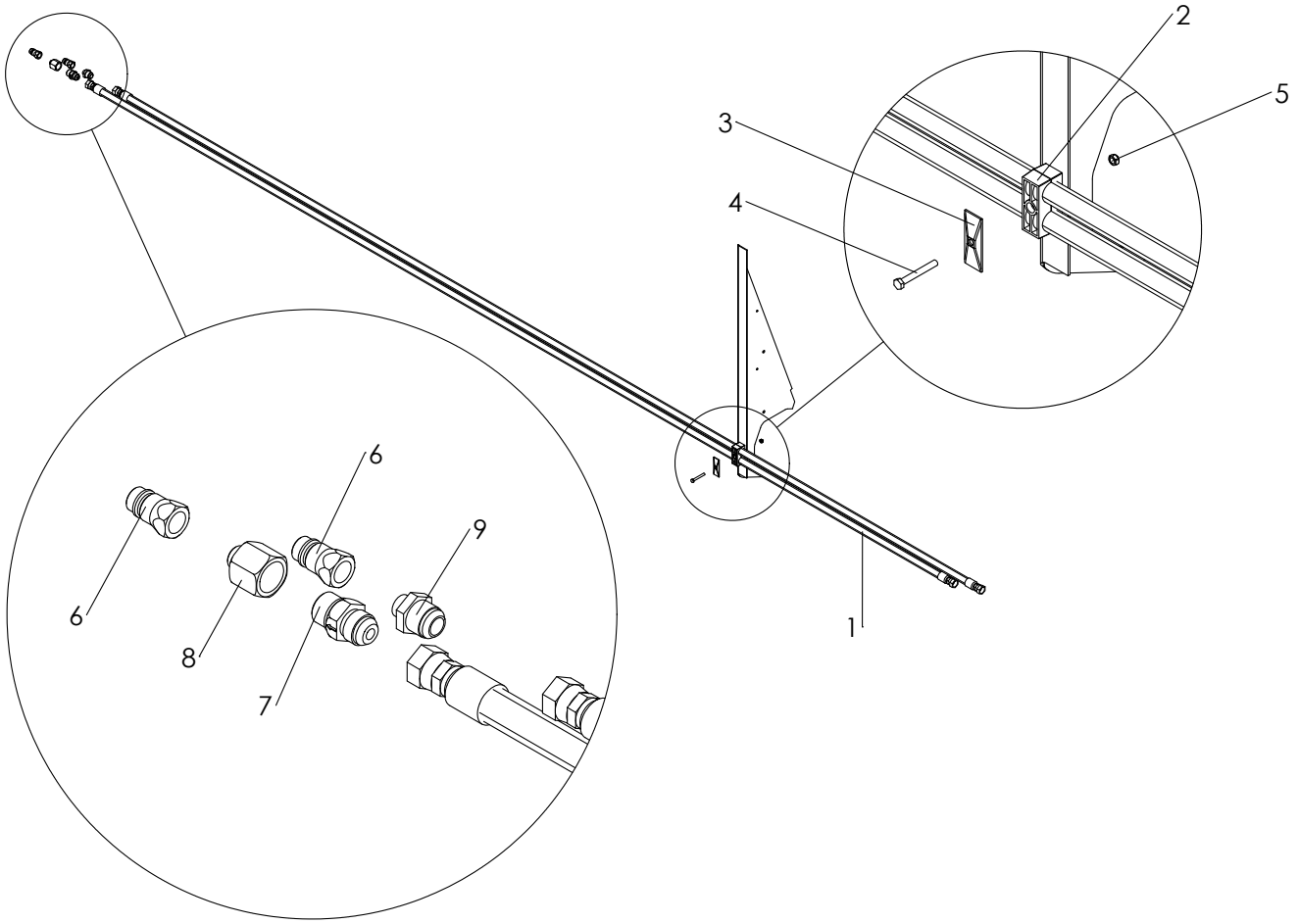


| ITEM | PART NO. | DESCRIPTION | QTY |
|---|---|---|---|
| 1 | 307316 | Hose Assembly - 3/4 100R2 x 192 | 2 |
| 2 | 305266 | Clamp - Hose | 2 |
| 3 | 305267 | Plate - Cover, Hose Clamp | 2 |
| 4 | 71830 | Cap Screw - 5/16-18NC x 2-1/2 SS | 2 |
| 5 | 42221 | Nut - Lock 5/16-18NC SS | 2 |
| 6 | 305262 | Nipple - QD 1/2 | 1 |
| 7 | 305263 | Valve - Check | 1 |
| 8 | 309294 | Adapter - Connector | 1 |
| 9 | 34811 | Adapter - Connector | 1 |

# Body Hydraulics

## Relief Valve Assy

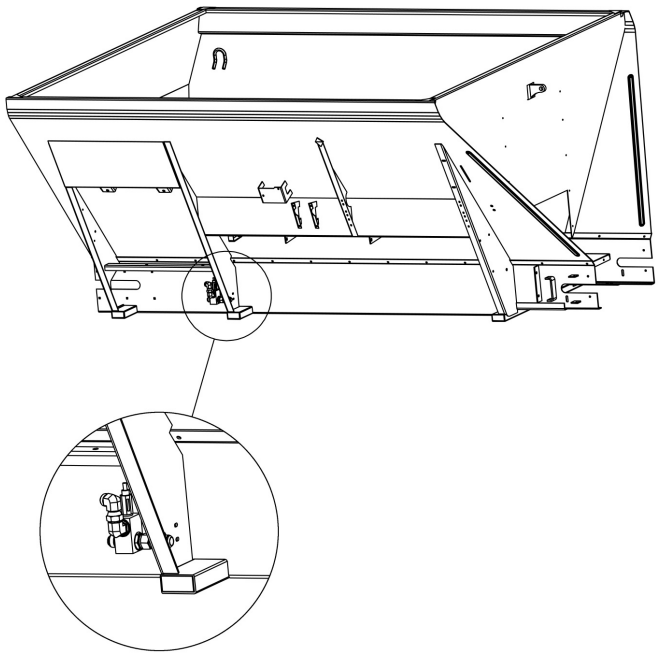

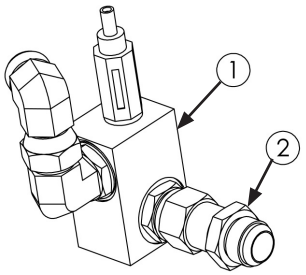


| ITEM | PART NO. | DESCRIPTION | QTY |
|---|---|---|---|
| | 307339 | Valve Assy | |
| 1 | 307324 | Valve Assy - Relief | 1 |
| 2 | 34747 | Fitting - 16-16 070601 | 1 |

# Body Hydraulics

## Hydraulic Reservoir

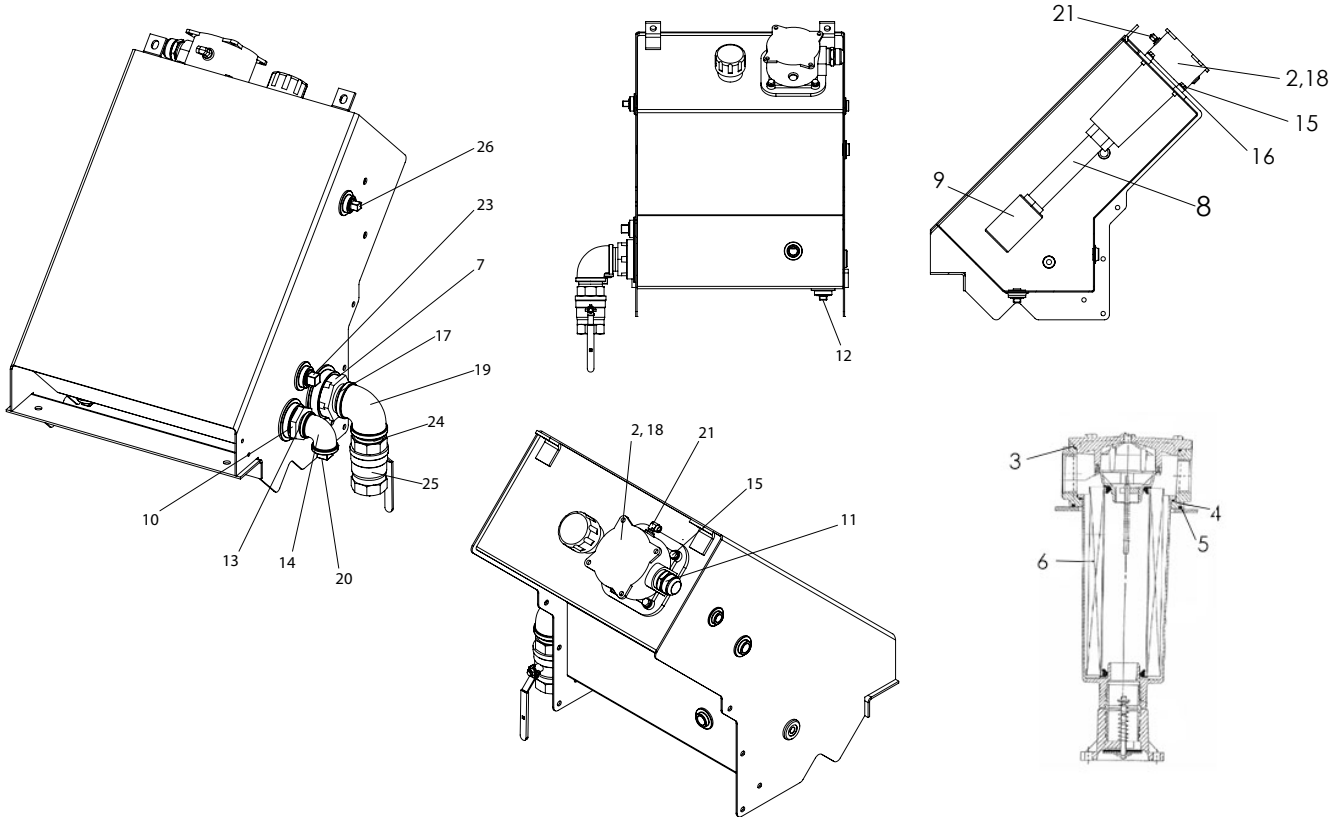

# Body Hydraulics

## Hydraulic Reservoir Cont.

| ITEM | PART NO. | DESCRIPTION | QTY |
|---|---|---|---|
| | 311735 | Hydraulic Reservoir Assy | |
| 1 | 311736 | Tank – Hydraulic Wldmt | 1 |
| 2 | 88838 | Filter – Return, Includes 3-6 | 1 |
| 3 | 306772 | O-Ring - Cover Filter | 1 |
| 4 | 306773 | O - Ring - Housing Filter | 1 |
| 5 | 306789 | Seal - Filter Assy | 1 |
| 6 | 305066 | Element - Filter | 1 |
| 7 | 305063 | Strainer – 2 NPT | 1 |
| 8 | 305058 | Pipe – 1.5 SCH40 10 | 1 |
| 9 | 305057 | Diffuser – Tank | 1 |
| 10 | 305062 | Strainer – 1-1/4 NPT | 1 |
| 11 | 29768 | Fitting – 20-20 070102 | 1 |
| 12 | 305061 | Plug – Magnetic 1 NPT | 1 |
| 13 | 6028 | Nipple - Close 1-1/4 NPT | 1 |
| 14 | 6011 | Elbow 90° 2 NPT | 1 |
| 15 | 20068 | Cap Screw – 3/8-16 x 1-1/4 | 4 |
| 16 | 20712 | Washer – Lock 3/8 | 4 |
| 17 | 22324 | Nipple - Close 2 NPT STD | 1 |
| 18 | 306186 | Gasket Maker - Silicone | AR |
| 19 | 23703 | Adapter - Elbow 90° 2 NPT | 1 |
| 20 | 6035 | Plug - Pipe 1-1/4 NPT | 1 |
| 21 | 311214 | Fitting - 2-2 140239 | 1 |
| 22 | 29752 | Fitting - 12-12 070102 | 1 |
| 23 | 6034 | Plug - Pipe 1 NPT | 1 |
| 24 | 22324 | Nipple - Pipe 2 NPT x 2 | 1 |
| 25 | 305060 | Valve - Ball 2 NPT | 1 |
| 26 | 29801 | Fitting - 12 070112 | 1 |

AR - As Required

# Body Hydraulics

## Hydraulic Reservoir w/ Cooler

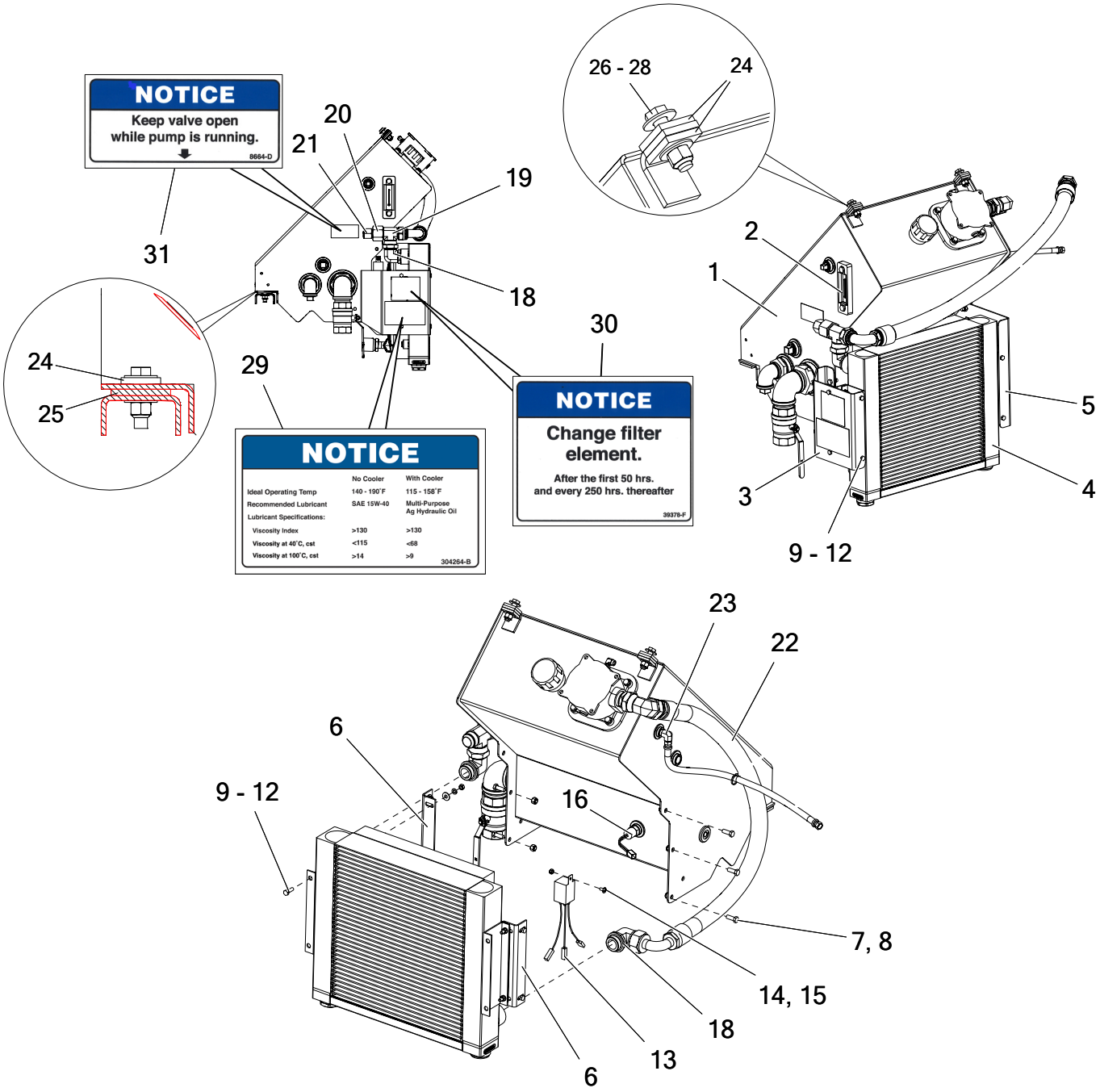


| ITEM | PART NO. | DESCRIPTION | QTY |
|---|---|---|---|
| 1 | 311735 | Hydraulic Reservoir Assy | 1 |
| 2 | 38575 | Gauge – Sight & Temperature | 1 |
| 3 | 305761 | Bracket – Cooler LH | 1 |
| 4 | 305767 | Cooler – Assy | 1 |
| | *305767-AA | Core - Cooler | 1 |

# Body Hydraulics

## Hydraulic Reservoir w/ Cooler

| ITEM | PART NO. | DESCRIPTION | QTY |
|---|---|---|---|
| | *305767-AB | Fan - Assy Cooler | 1 |
| | *305767-AC | Housing - Cooler | 1 |
| 5 | 305760 | Bracket – Cooler RH | 1 |
| 6 | 306447 | Bracket - Cooler Mount | 2 |
| 7 | 36398 | Cap Screw – 3/8-16NC x 1 SS | 5 |
| 8 | 72054 | Nut – Lock 3/8 SS | 5 |
| 9 | 34580 | Cap Screw - 5/16 x 1 | 8 |
| 10 | 36424 | Washer – Flat 5/16 | 8 |
| 11 | 36419 | Washer – Lock 5/16 SS | 8 |
| 12 | 36413 | Nut – Hex 1/3-18NC SS | 8 |
| 13 | 312271 | Relay – 12VDC 40A | 1 |
| 14 | 56258 | Screw – Truss Head 1/4-20 x 1/2 SS | 1 |
| 15 | 42034 | Nut – Lock 1/4-20 SS | 1 |
| 16 | 305074 | Switch – Temperature 114° | 1 |
| 17 | 98568 | Fitting – 20-20 070221 | 1 |
| 18 | 96916 | Fitting – 20-20 070220 | 2 |
| 19 | 56267 | Fitting – 20-20 070433 | 1 |
| 20 | 34819 | Fitting – 20-16 070123 | 1 |
| 21 | 29802 | Fitting - 16 070123 | 1 |
| 22 | 98662 | Hose – 1-1/4" x 48" 100R4 | 1 |
| 23 | 34779 | Fitting - 6-6 070202 | 1 |
| 24 | 39159 | Belt - Spacer | 6 |
| 25 | 39158 | Belt - Flex Mount | 2 |
| 26 | 36426 | Washer - Flat 1/2 SS | 6 |
| 27 | 36403 | Cap Screw - 1/2-13NC x 2 SS | 4 |
| 28 | 39016 | Nut - Lock 1/2-13NC SS | 4 |
| 29 | 304264 | Decal - Important Cooler | 1 |
| 30 | 39378 | Decal - Change Filter Element | 1 |
| 31 | 8664 | Decal - Important Keep Valve Open | 1 |

* - Not Shown

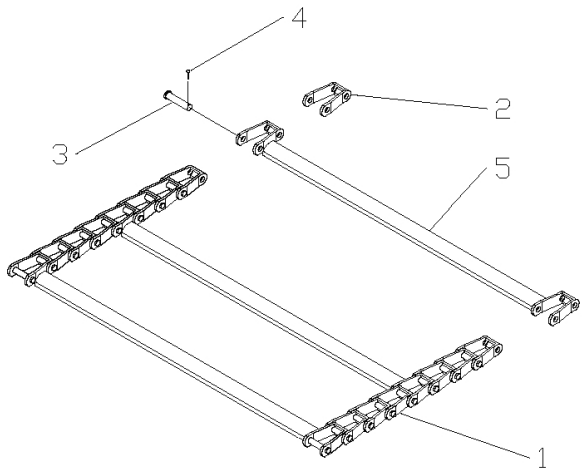


#1 – Cross bars every 3rd link

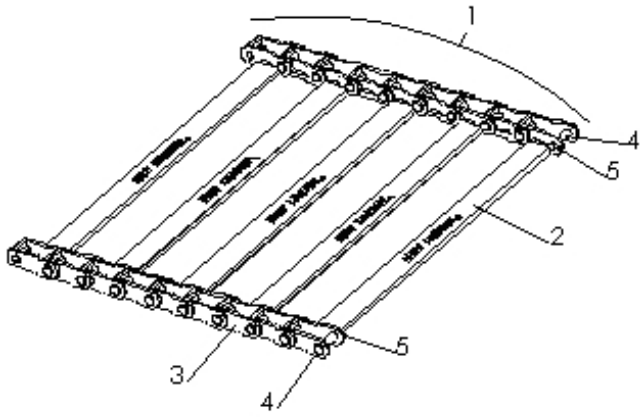


#2 – Cross bars every other link

| ITEM | PART NO. | DESCRIPTION | QTY |
|---|---|---|---|
| 1 | 304465-AD | #2 Chain - Assembly | 1 |
| | 305774-AD | #1 Pintle Chain | 1 |
| 2 | 310292 | Crossbar Weldment | AR |
| | 310293 | Cross Bar Weldment | AR |
| 3 | 90284 | Chain - Link | 2 |
| 4 | 36697 | Pin – Pintle Chain | 8 |
| 5 | 20817 | Pin – Cotter | 8 |

AR - As Required

# Conveyor
## Chain Shield Hardware

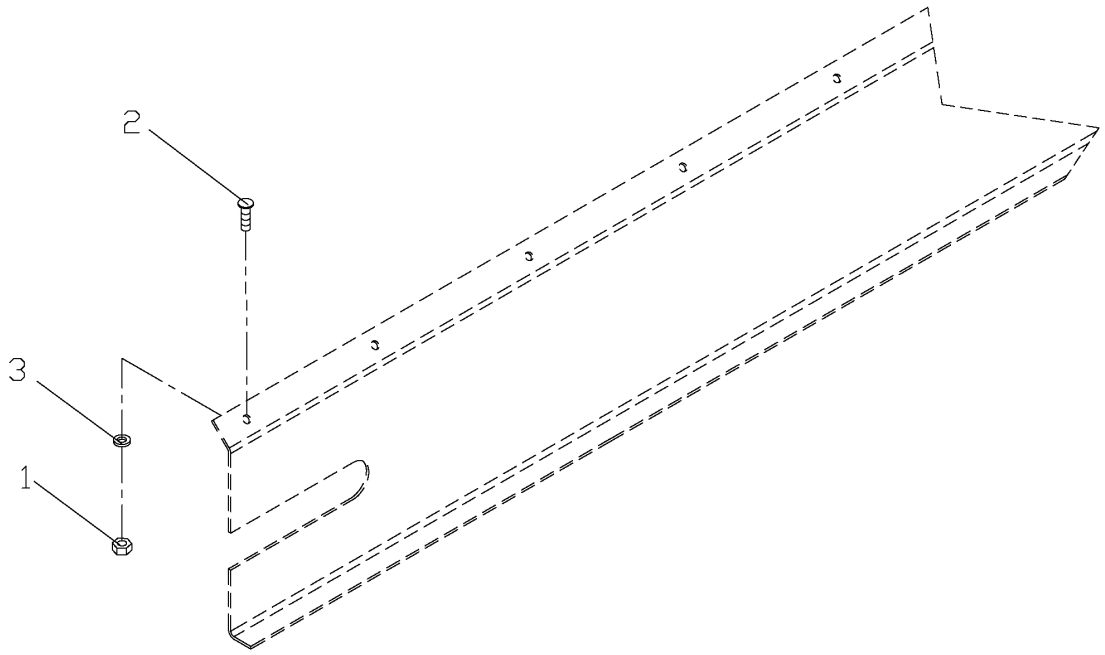


| ITEM | PART NO. | DESCRIPTION | QTY |
|---|---|---|---|
| | 305500-AD | Chain Shield | |
| 1 | 36414 | Nut – Hex 3/8 | 34 |
| 2 | 71829 | Bolt – Carriage 3/8 x 1 | 17 |
| 3 | 36420 | Washer – Lock 3/8 | 34 |
| 4 | *98321 | Bolt – Carriage 3/8 x 1-1/4 | 17 |
| 5 | *313047 | Lock Nut | 17 |

* - Not Shown

# Conveyor

## Conveyor Idler

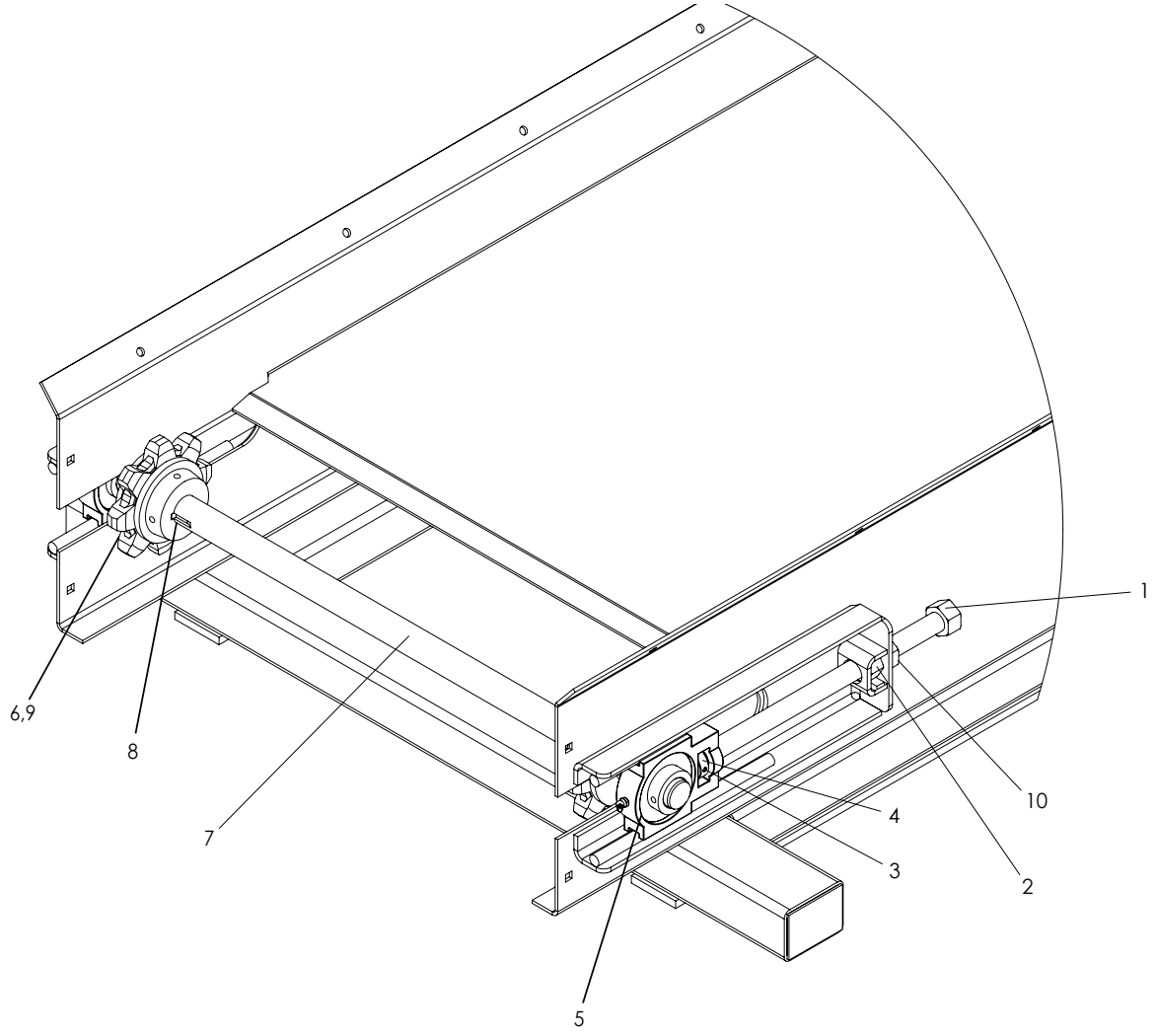


| ITEM | PART NO. | DESCRIPTION | QTY |
|---|---|---|---|
| 1 | 36508 | Screw - Weldment Adjusting SS | 2 |
| 2 | 39110 | Nut Weldment | 2 |
| 3 | 20925 | Pin – Roll 1/4 x 1 1/2 | 2 |
| 4 | 30725 | Collar – Set 1" | 2 |
| 5 | 22511 | Bearing – Take-up | 2 |
| 6 | 97051 | Sprocket – Idler | 2 |
| 7 | 310640 | Shaft – Idler | 1 |
| 8 | 2135 | Key – Square 5/16 x 2 1/2 | 2 |
| 9 | 20735 | Screw - Set 1/4-20 x 1/4 | 1 |
| 10 | 36509 | Nut – Hex 1-8NC SS | 2 |

# Conveyor

## Conveyor Drive

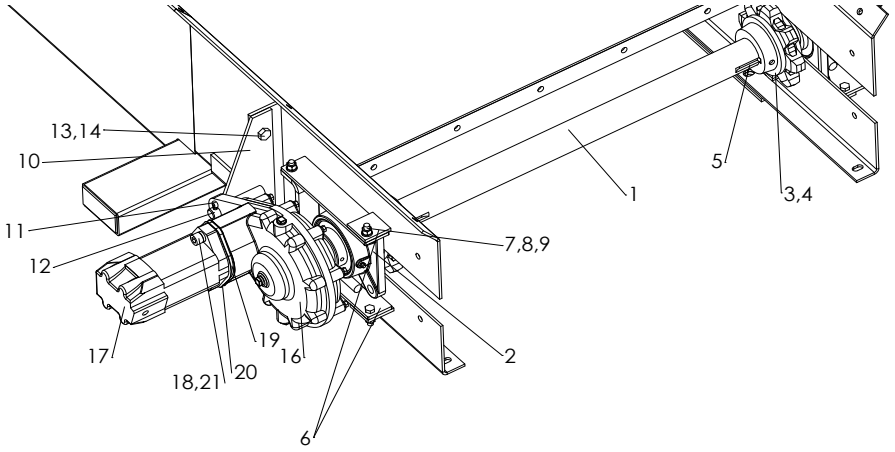


| ITEM | PART NO. | | DESCRIPTION | QTY |
|---|---|---|---|---|
| | CS | SS | | |
| 1 | 303304 | 303304 | Shaft – Drive | 1 |
| 2 | 6465 | 6465 | Bearing | 2 |
| 3 | 88276 | 88276 | Sprocket | 2 |
| 4 | 20748 | 20748 | Screw – Set 3/8-16 x 3/8 | 4 |
| 5 | 6131 | 6131 | Key – Square 3/8 x 1 1/2 | 2 |
| 6 | 82882 | 82885 | Guide – Bearing | 4 |
| 7 | 20068 | 36399 | Cap Screw - 3/8 x 1 1/4 | 8 |
| 8 | 20712 | 36420 | Washer – Lock 3/8 | 8 |
| 9 | 20644 | 36414 | Nut – Hex 3/8 | 8 |
| 10 | 82550 | 82552 | Mount – Torque Arm LH | 1 |
| 11 | 20833 | 20833 | Pin – Cotter 1/4 x 1 1/2 | 2 |
| 13 | 20128 | 20128 | Cap Screw - 1/2 x 1 1/4 | 4 |
| 14 | 20680 | 20680 | Nut – Lock 1/2 | 4 |
| 15 | *82549 | *82551 | Mount – Torque Arm RH | 1 |
| 16 | 36671 | 36671 | Gear Case – 6:1 | 2 |
| 17 | 56270 | 56270 | Motor – Hydraulic 2000 Series 9.6 CID | 2 |
| 18 | 305098 | 305098 | Cap Screw - Sockethead 1/4-13NC x 1-3/4 | 4 |
| 19 | 34650 | 34650 | Spacer – Motor | 2 |
| 20 | 74524 | 74524 | Gasket | 4 |
| 21 | 30227 | 30227 | Washer - Lock Sockethead 1/2 | 4 |
| 22 | 29753 | 29753 | Fitting | 2 |

* - Not Shown

# Conveyor

## Breather Tube - Gear case

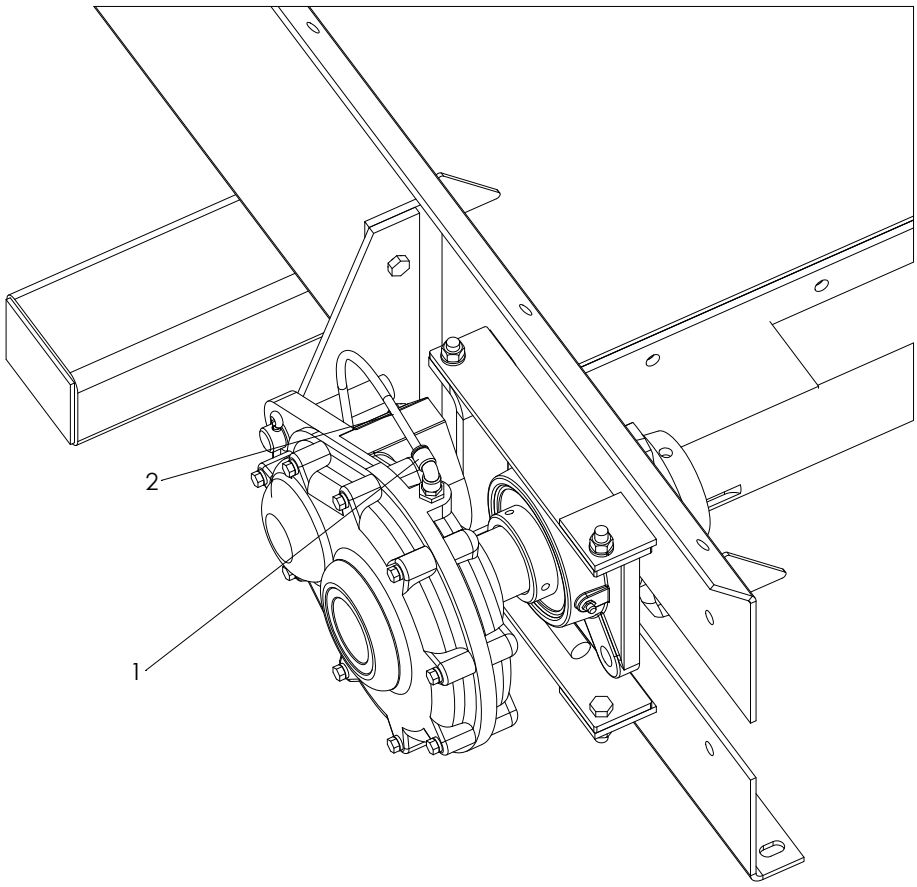


| ITEM | PART NO. | DESCRIPTION | QTY |
|---|---|---|---|
| 1 | 306891 | Fitting - 4-2 630202K | 1 |
| 2 | 9005-0-7761 | Tubing - 1/4 OD Air Brake Black | 1.5 ft |

# Conveyor
## Rear Wiper - #2 & #3 Conveyors

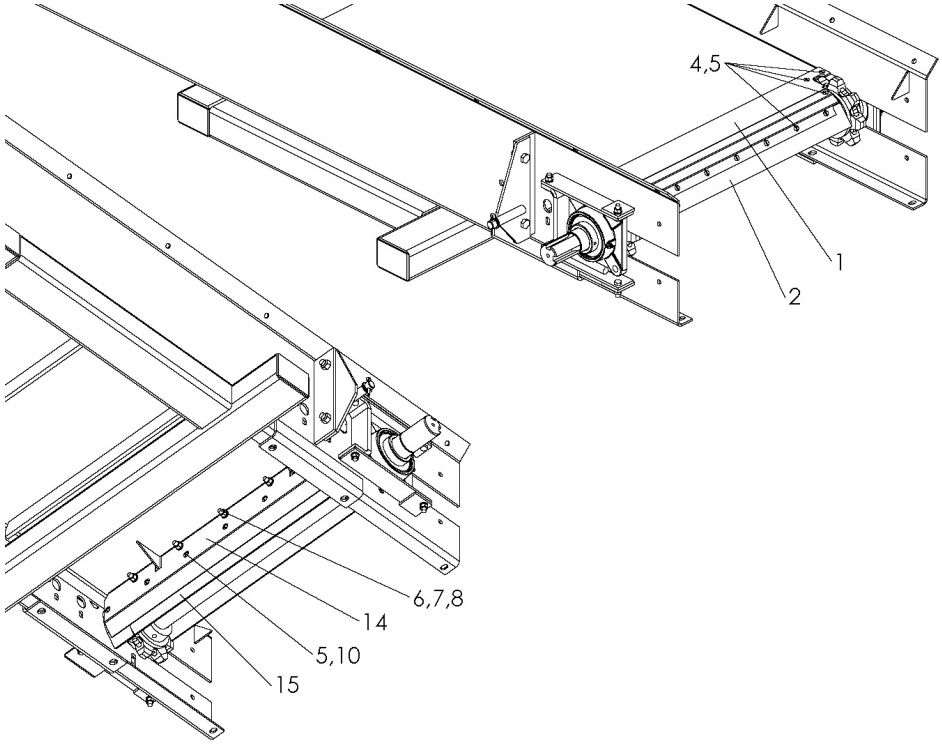


| ITEM | PART NO. | | DESCRIPTION | QTY |
|---|---|---|---|---|
| | CS | SS | | |
| | 304441 | 304442 | Wiper – Assembly Rear | |
| 1 | 303312 | 305329 | Lip – Weldment Rear | 1 |
| 2 | 303306 | 303306 | Wiper – 34" Rear Lip | 1 |
| 3 | 304446 | 304446 | Belt – Rear Wiper | 1 |
| 4 | 20617 | 56400 | Screw – Flat Head 1/4 x 1/2 | 13 |
| 5 | 88931 | 88931 | Nut – Tee 1/4 | 22 |
| 6 | 20068 | 36399 | Cap Screw – 3/8 x 1 | 5 |
| 7 | 20712 | 36420 | Washer – Lock 3/8 | 5 |
| 8 | 20644 | 36414 | Nut – Hex 3/8 | 5 |
| 9 | | | NOT USED | |
| 10 | 56258 | 56258 | Screw – Truss Head 1/4 x 1/2 | 9 |
| 11 | | | NOT USED | |
| 12 | | | NOT USED | |
| 13 | | | NOT USED | |
| 14 | 304444 | 304445 | Mount – 34" Internal Wiper | 1 |
| 15 | 304443 | 304443 | Rubber – 34" Internal Wiper | 1 |

# Conveyor
## Encoder

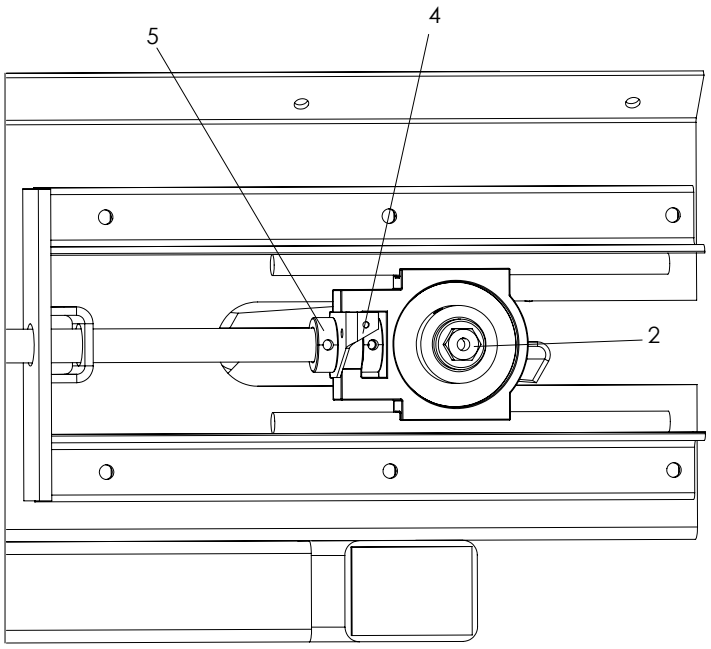


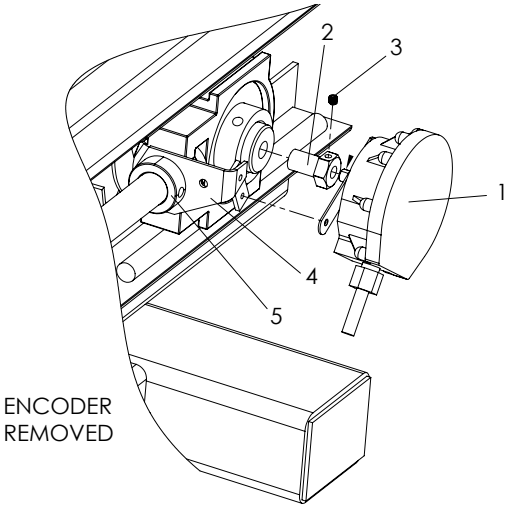


ENCODER
REMOVED

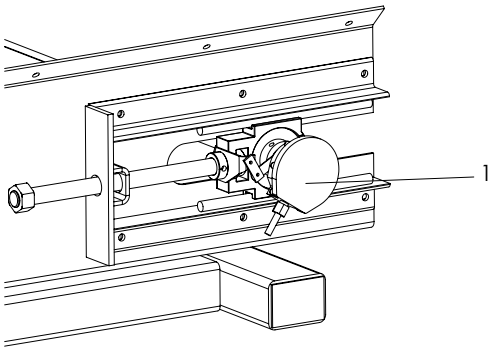


| ITEM | PART NO. | DESCRIPTION | QTY |
|---|---|---|---|
| 1 | 303994 | Encoder – 180 with Hardware | 1 |
| 2 | 310601 | Coupler - Rate Sensor SS | 1 |
| 3 | 310603 | Screw - Set 1/4-20NC x 1/4 SS | 1 |
| 4 | 81949 | Bracket - Sensor, Idler Mount | 1 |
| 5 | 2696 | Collar - Set 1" | 1 |

This page is intentionally left blank.

# Conveyor

## Conveyor Chain Oiler

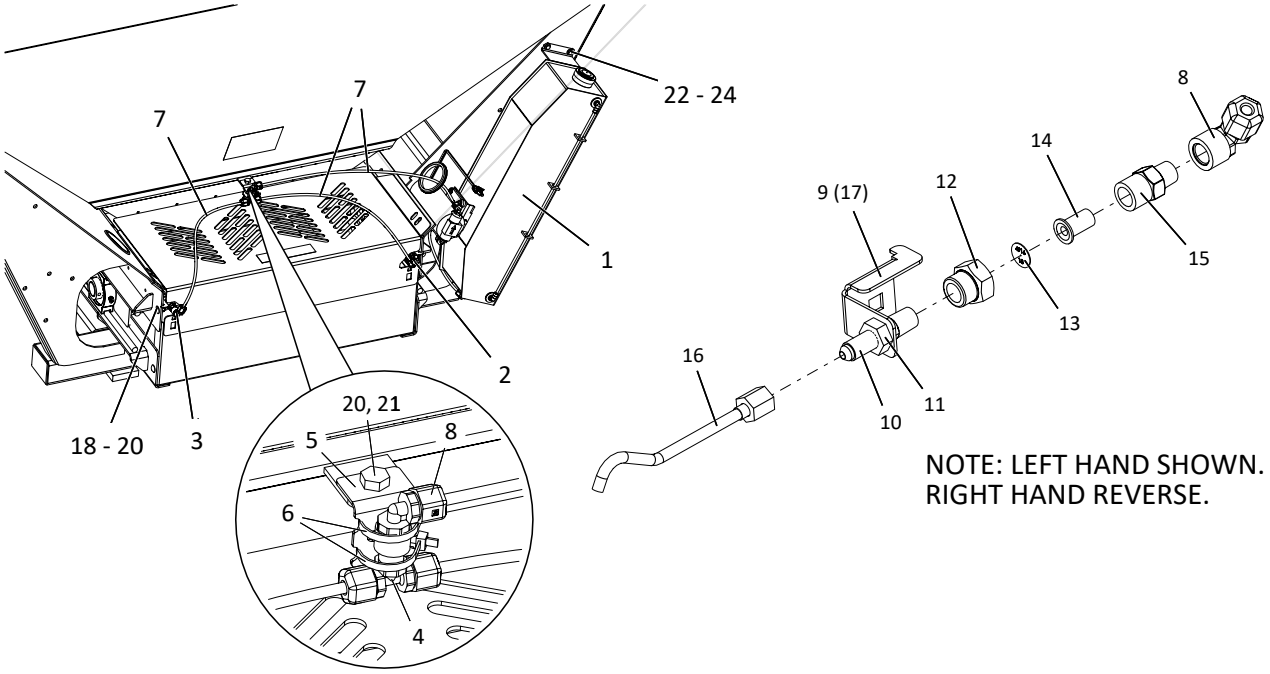


NOTE: LEFT HAND SHOWN.
RIGHT HAND REVERSE.

| ITEM | PART NO. | DESCRIPTION | | QTY |
|---|---|---|---|---|
| 1 | 314235 | Tank - Assy Chain Oiler, Includes Items 24 - 37 | | 1 |
| 2 | 314019 | Nozzle - Assy LH, Includes Items 8 - 16, 37 | | 1 |
| 3 | 314020 | Nozzle - Assy RH, Includes Items 8, 10 - 17, 37 | | 1 |
| 4 | 309905 | Tee - HDPP 1/4 NPT Male x 1/4 Tube | | 1 |
| 5 | 306804 | Bracket - Coupling | | 1 |
| 6 | 99674 | Tie - Wire | | 2 |
| 7 | 301338 | Tubing - Black 1/4" Nylon | 28"<br>22" | 1<br>2 |
| 8 | 309904 | Elbow - HDPP 1/4 NPT Fem x 1/4 Tube | | 3 |
| 9 | 314016 | Angle - Nozzle Mount LH | | 1 |
| 10 | 314012 | Fitting - 4-4 070602 | | 2 |
| 11 | 314261 | Fitting - 4 070118 | | 2 |
| 12 | 314014 | Fitting - Outlet 1/4 NPT Fem x 1/4 TT Fem Nylon | | 2 |
| 13 | 314013 | Plate - Orifice SS | | 2 |
| 14 | 306651 | Strainer - w/ Check Valve | | 2 |
| 15 | 314015 | Fitting - Adapter 1/4 NPT Male x 1/4 TT Male Nylon | | 2 |
| 16 | 314018 | Nozzle - Tube 304 | | 2 |
| 17 | 314017 | Angle - Nozzle Mount RH | | 1 |
| 18 | 36398 | Cap Screw - 3/8-16NC x 1 SS | | 2 |
| 19 | 36425 | Washer - Flat 3/8 SS | | 4 |

# Conveyor

## Conveyor Chain Oiler Cont.

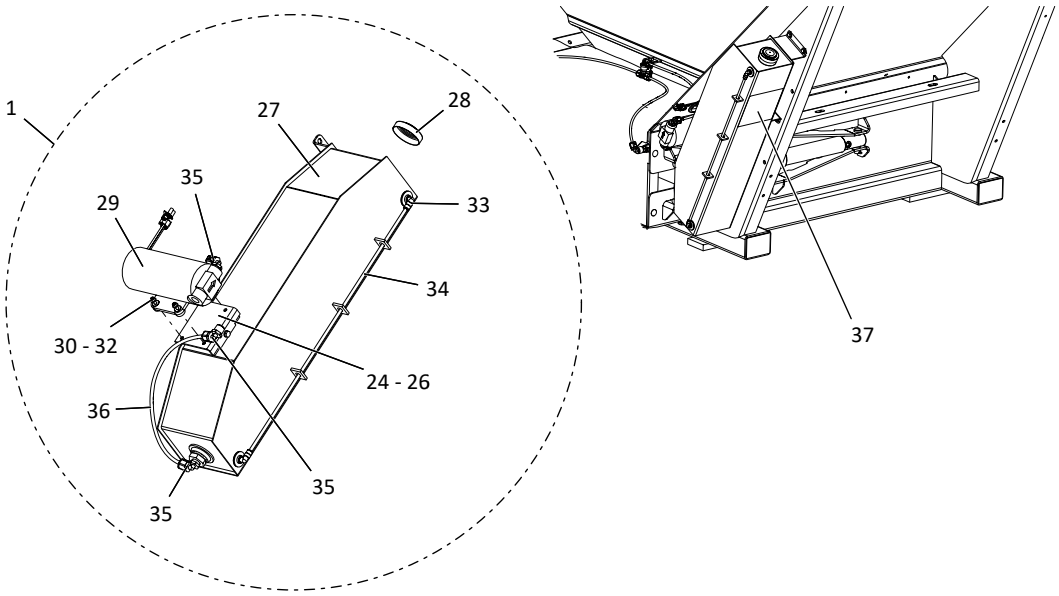


| ITEM | PART NO. | DESCRIPTION | | QTY |
|---|---|---|---|---|
| 20 | 72054 | Nut - Lock 3/8-16NC SS | | 3 |
| 21 | 36293 | Cap Screw - 3/8-16NC x 3/4 SS | | 1 |
| 22 | 36423 | Washer - Flat 1/4 SS | | 8 |
| 23 | 42034 | Nut - Lock 1/4-20NC SS | | 4 |
| 24 | 36393 | Cap Screw - 1/4-20NC x 3/4 SS | | 5 |
| 25 | 36418 | Washer - Lock 1/4 SS | | 1 |
| 26 | 304409 | Mount - Pump | | 1 |
| 27 | 305754 | Tank - Wldmt Chain Oiler, Includes Cap | | 1 |
| 28 | 21980 | Cap - Vented | | 1 |
| 29 | 304390 | Pump - Assy w/ Connector | | 1 |
| 30 | 44454 | Screw - Socket Head #10-24NC x 1 SS | | 4 |
| 31 | 171052 | Washer - Flat #10 SS | | 8 |
| 32 | 56355 | Nut - Lock #10-24NC SS | | 4 |
| 33 | 301337 | Fitting - 90° Male 1/8 NPT | | 2 |
| 34 | 306437 | Tubing - Clear 1/4 OD x 24-3/4 | 14″ | 1 |
| 35 | 309902 | Elbow - HDPP 3/8 NPT Male x 1/4 Tubing | | 3 |
| 36 | 301338 | Tube - 1/4 Black Nylon | 8″ | 1 |
| 37 | 21476 | Decal - Notice, Conveyor Chain Life | | 1 |

# Conveyor
## Wiper - Front

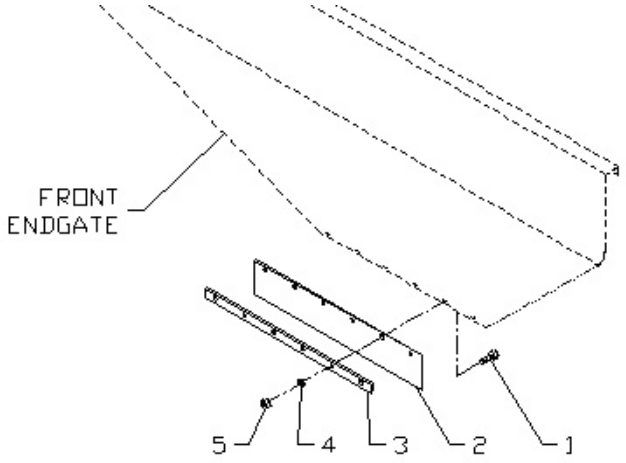


| ITEM | PART NO. | DESCRIPTION | QTY |
|---|---|---|---|
| 1 | 36393 | Screw – Machine 1/4 x 3/4 | 7 |
| 2 | 303314 | Wiper – Belt | 1 |
| 3 | 303315 | Retainer – Belt | 1 |
| 4 | 36418 | Washer – Lock 1/4 | 7 |
| 5 | 36412 | Nut – Hex 1/4 | 7 |

# Conveyor

## Front Conveyor Guard

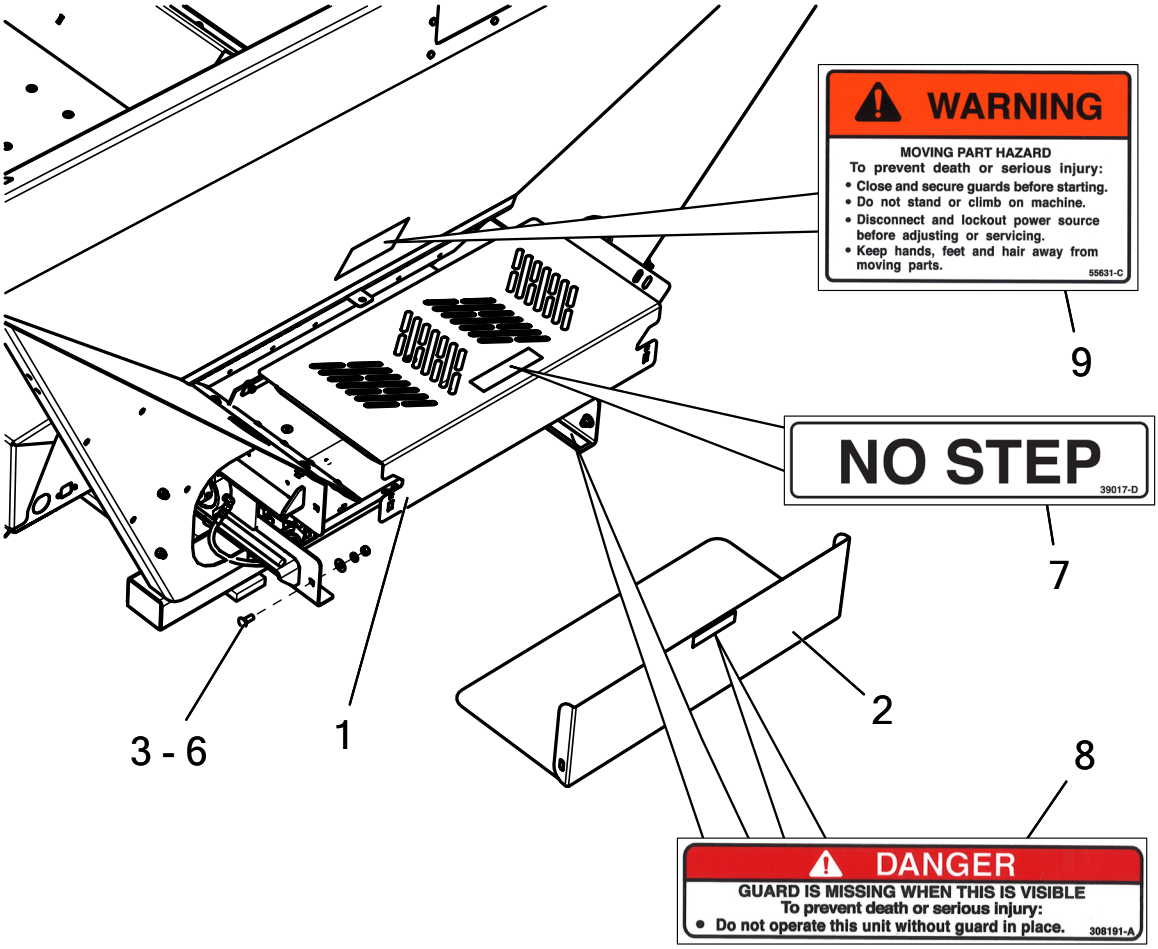


| ITEM | PART NO. | DESCRIPTION | QTY |
|---|---|---|---|
| 1 | 308379 | Guard - Front Top, Includes Item 7 | 1 |
| 2 | 308380 | Guard - Front Bottom, Includes Item 8 | 1 |
| 3 | 36408 | Bolt - Carriage 3/8-16NC x 1 SS | 2 |
| 4 | 36425 | Washer - Flat 3/8 SS | 2 |
| 5 | 36420 | Washer - Lock 3/8 SS | 2 |
| 6 | 36414 | Nut - Hex 3/8-16NC SS | 2 |
| 7 | 39017 | Decal - No Step | 1 |
| 8 | 308191 | Decal - Danger, Guard is Missing | 3 |
| 9 | 55631 | Decal - Danger, Moving Part Hazard | 1 |

This page is intentionally left blank.

# Electronics

## Enclosure Assembly Mount

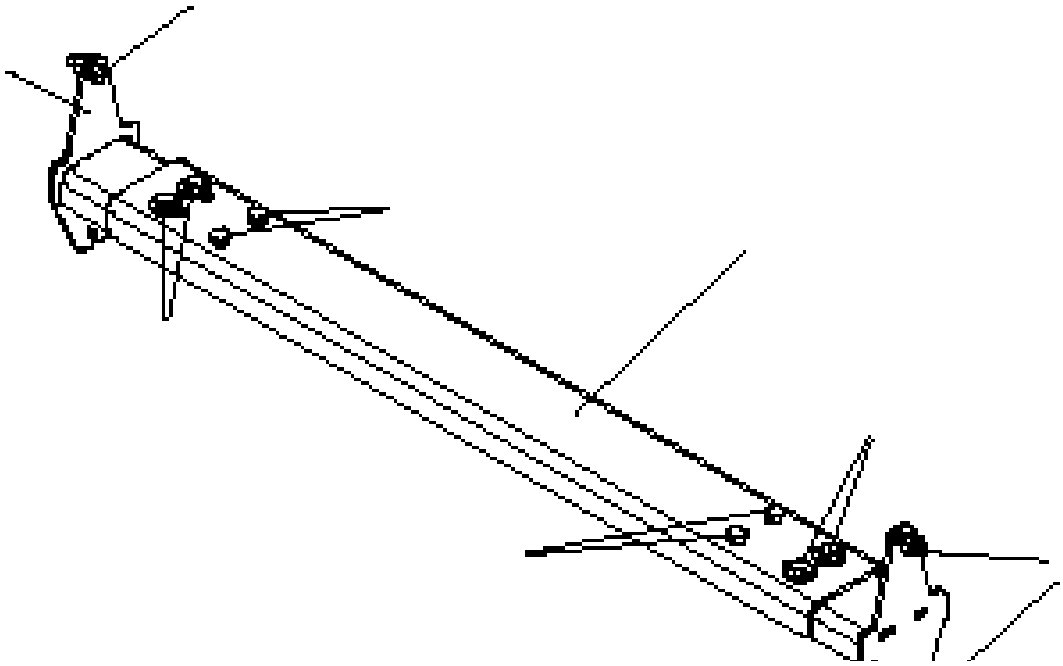

| ITEM | PART NO. | DESCRIPTION | QTY |
|---|---|---|---|
| 1 | 311850 | Mount - Wldmt | 2 |
| 2 | 310717 | Channel - Mount | 1 |
| 3 | 36425 | Washer - Flat 3/8 SS | 4 |
| 4 | 36398 | Cap Screw - 3/8-16NC x 1 SS | 12 |
| 5 | 72054 | Nut - Lock 3/8-16NC SS | 12 |

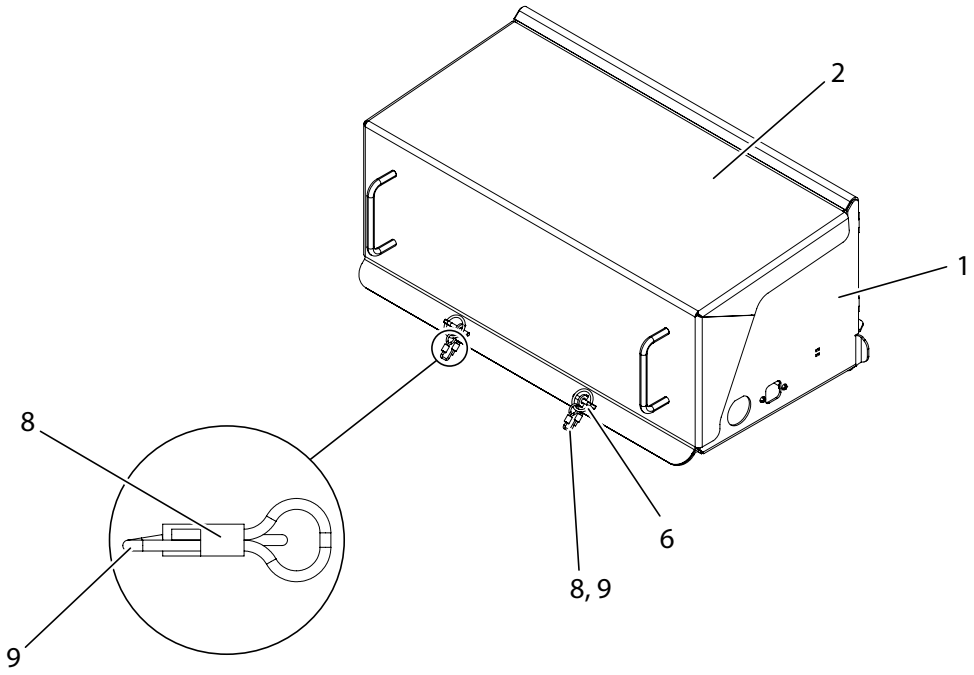
2
1
8
6
8, 9
9

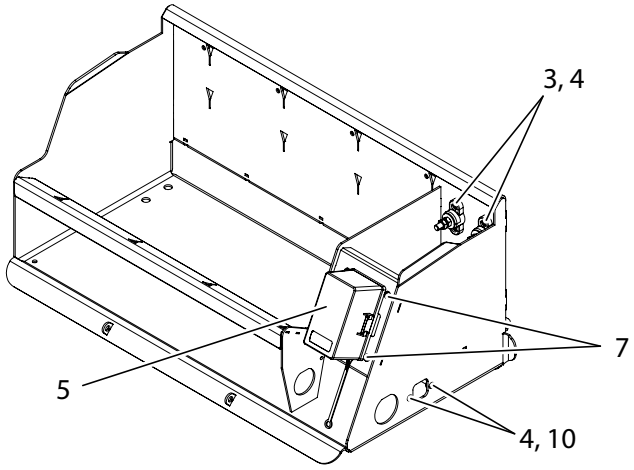
3, 4
7
5
4, 10

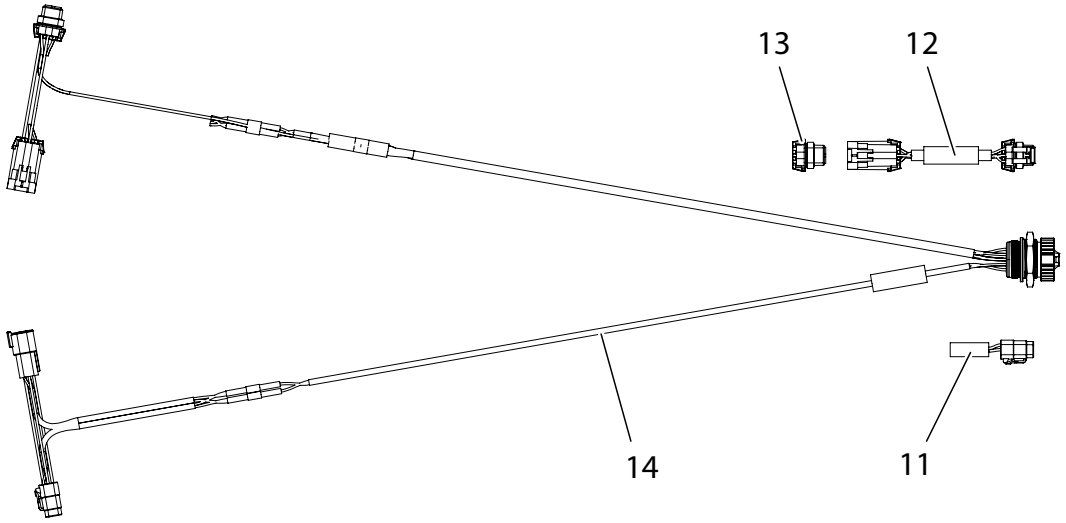
13
12
14
11

# Electronics

## Enclosure Assembly Cont.

| ITEM | PART NO. | DESCRIPTION | QTY |
|---|---|---|---|
| | 311841 | Enclosure - Assy 304, Includes Items 1 - 15 | 1 |
| 1 | 310722 | Enclosure - Weldment Controller 304 | 1 |
| 2 | 310724 | Cover - Weldment 304 | 1 |
| 3 | 310740 | Post - Power Distribution | 2 |
| 4 | 44483 | Screw - Panhead #10-24 x 3/4 SS | 6 |
| 5 | 310739 | Harness - New Leader ECU Enclosure | 1 |
| 6 | 310732 | Pin - Lynch .188 x 1.25 SS | 2 |
| 7 | 310733 | Screw - Panhead #10-32 x 1/2 SS | 4 |
| 8 | 308085 | Ferrule - .185 x .734 | 4 |
| 9 | 311731 | Cable - 12 Coated SS | 2 |
| 10 | 56355 | Nut - Lock #10-24 SS | 2 |
| 11 | 311068 | Plug - Terminating Local CAN | 1 |
| 12 | 311070 | Harness - ISOBUS Active Termination, Includes Item 14 | 1 |
| 13 | 311069 | Circuit - Terminating Bias ISO CAN | 1 |
| 14 | 312448 | Harness - ISOBUS Diagnostic Tee | 1 |

# Electronics

## Controller - Main Bin

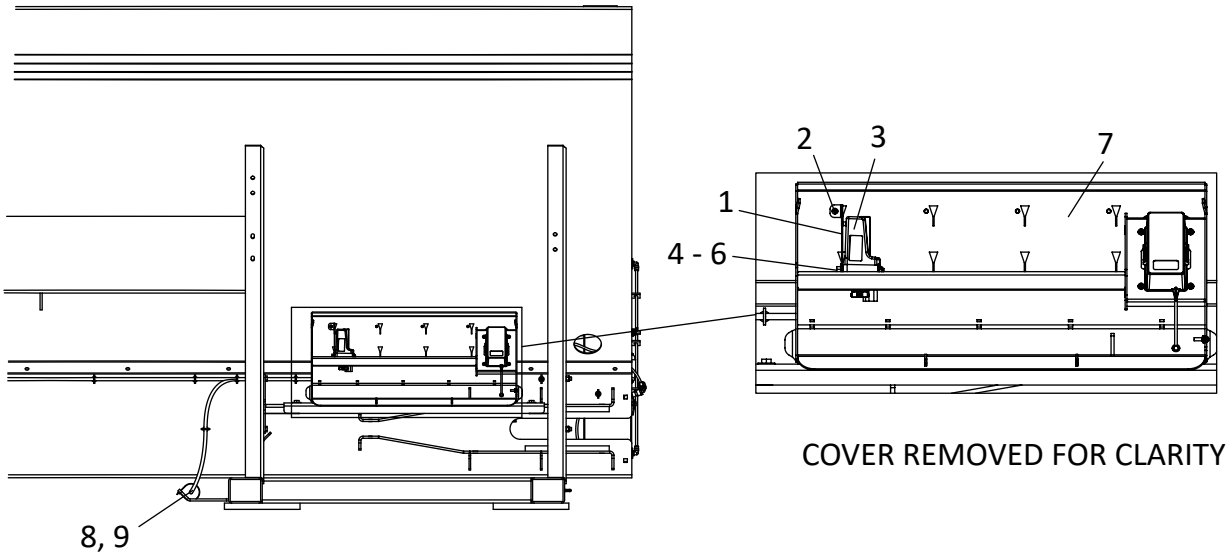


| ITEM | PART NO. | DESCRIPTION | QTY |
|---|---|---|---|
| 1 | 310718 | Bracket - Module 304 | 1 |
| 2 | 44483 | Screw - Panhead PHLP #10-24NC x 3/4 SS | 1 |
| 3 | 310734 | Module - Master Control | 1 |
| 4 | 36296 | Cap Screw - 3/8-16NC x 2-3/4 SS | 2 |
| 5 | 36425 | Washer - Flat 3/8 SS | 4 |
| 6 | 307395 | Nut - Lock Thin 3/8-16NC SS | 2 |
| 7 | 311841 | Enclosure - Assy 304 | 1 |
| 8 | 311886 | Harness - NL G5 Channel Control Master 15'-16' | 1 |
| 9 | 311887 | Harness - NL G5 Spinner/Hydraulics Controll 15'-16' | 1 |
| 10 | *310754 | Harness - Isobus Breakout Type 1 | 1 |
| 11 | *311067 | Receptacle - Terminating Local Can | 1 |
| 12 | *311074 | Transducer - Pressure | 2 |
| 13 | *311845 | Sensor - Group Hyd Tank | 1 |
| 14 | *311806 | Tie - Wire Fir Tree | 48 |
| 15 | *311846 | Sensor - Group Dual Spinner Speed | 1 |
| 16 | *99674 | Tie - Wire | 10 |

* Not Shown

This page is intentionally left blank.

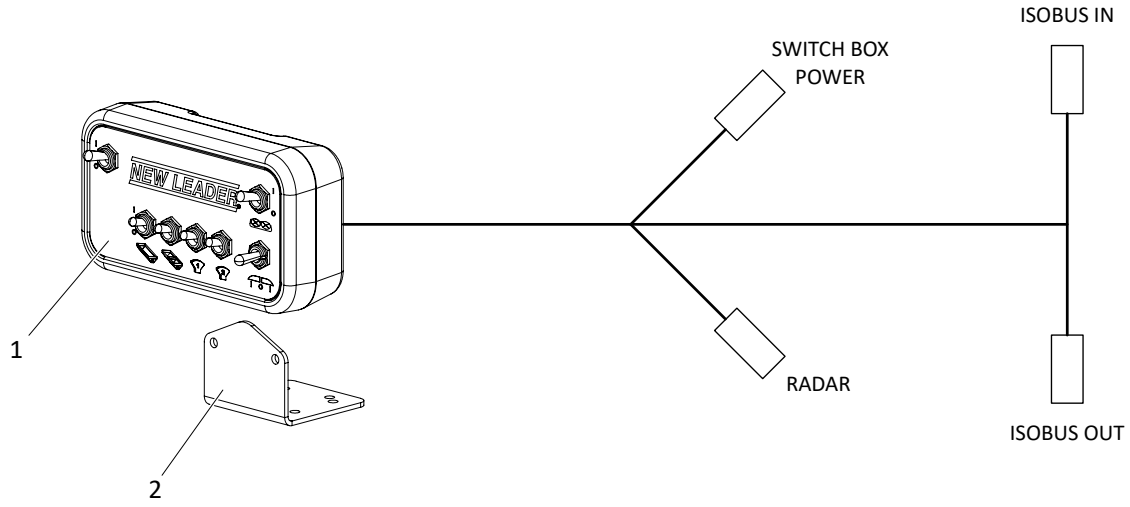


| ITEM | PART NO. | DESCRIPTION | QTY |
|---|---|---|---|
| 1 | 310742 | Switch Box - NL G5 | 1 |
| 2 | 313884 | Mount - Switch Box | 1 |
| 3 | *313581 | Hardware - Kit Switch Box | 1 |
| 4 | **314224 | Harness - 9 Pin AMP ISO AUX Console | AR |

* - Not Shown.

** - Harness required depends on tractor used with implement. Contact your New Leader parts dealer for details.

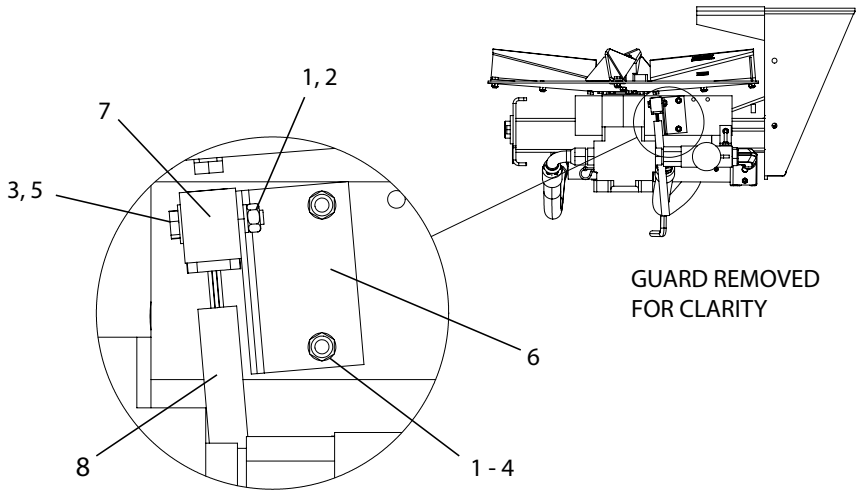


| ITEM | PART NO. | DESCRIPTION | QTY |
|---|---|---|---|
| | 305830 | Sensor – Kit Spinner | |
| 1 | 36412 | Nut-Hex .25-20NC SS | 1 |
| 2 | 36418 | Washer – Lock 1/4 SS | 1 |
| 3 | 36423 | Washer – Flat 1/4 SS | 2 |
| 4 | 36393 | Cap Screw – 1/4 x 3/4 SS | 2 |
| 5 | 42448 | Cap Screw – 1/4 x 1-1/2 SS | 3 |
| 6 | 86672 | Bracket | 6 |
| 7 | 89011<br>-88862<br>-88864 | Sensor – Assembly with Block<br>-Sensor - Assembly<br>-Block - Sensor | 1<br>1<br>1 |

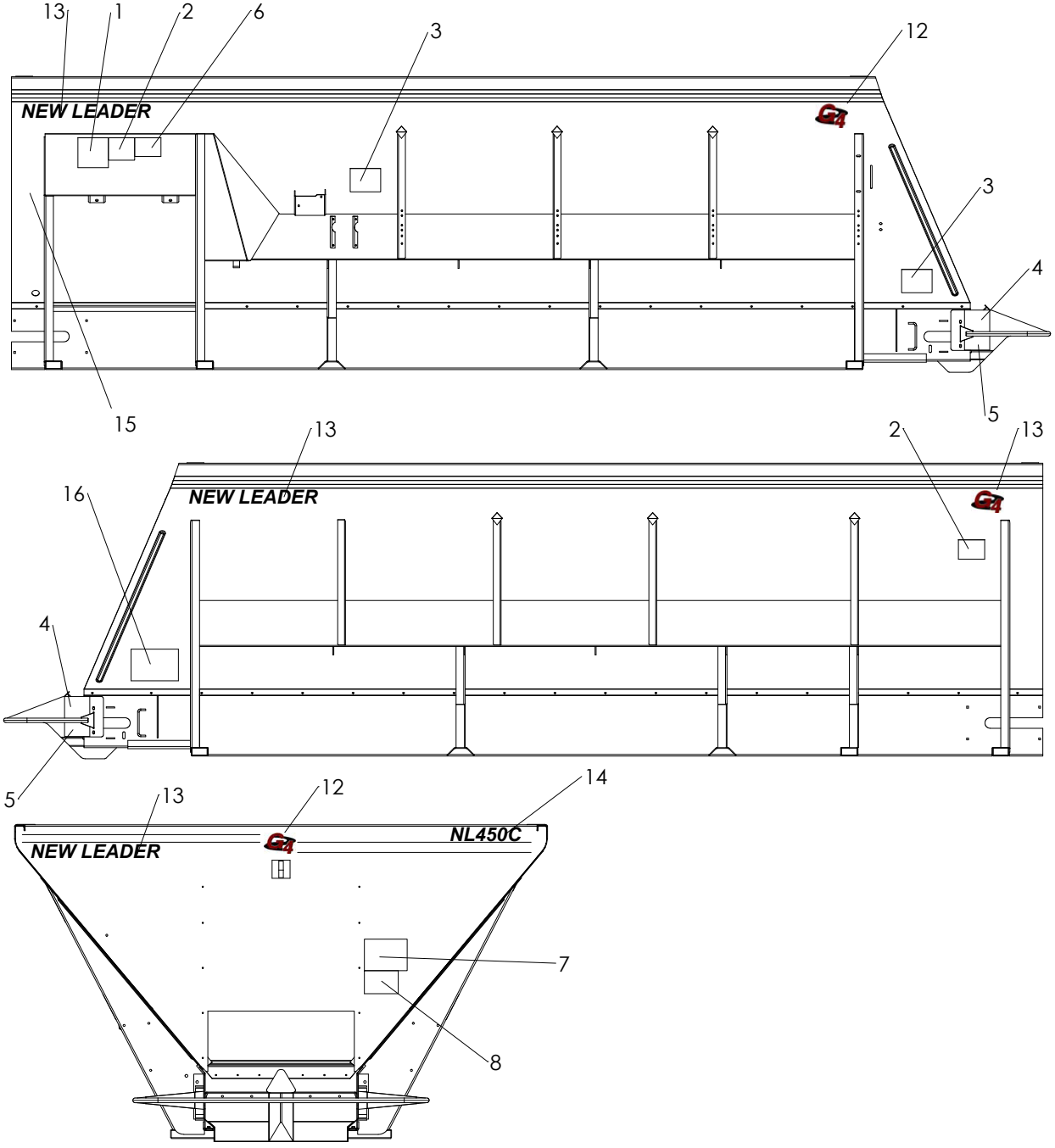
13
1
2
6
3
12
NEW LEADER
3
4
5
15
13
2
13
16
NEW LEADER
4
5
13
12
14
NEW LEADER
NL450C
7
8

# Decals Cont.

| ITEM | PART NO. | DESCRIPTION | QTY |
|---|---|---|---|
| 1 | 150034 | Caution - Operation & Maintenance | 1 |
| 2 | 364 | Danger - Moving Part | 2 |
| 3 | 39138 | Warning - High Pressure Fluid | 2 |
| 4 | 55630 | Warning - Falling Hazard | 2 |
| 5 | 55631 | Warning - Moving Part Hazard | 2 |
| 6 | 321 | Caution - Hazardous Material | 1 |
| 7 | 368 | Flying Material | 1 |
| 8 | 71526 | Spread Pattern | 1 |
| 9 | 304264 | Notice - Cooler | 1 |
| 10 | 39378 | Change Filter Element | 1 |
| 11 | 8664 | Notice - Keep Valve Open | 1 |
| 12 | 87122 | G4 Black/Red | 3 |
| 13 | 87164 | New Leader Black | 3 |
| 14 | 307263 | NL450C Black | 1 |
| 15 | 315865 | Decal - Warning, Prop 65 | 1 |
| 16 | 21476 | Decal - Important Conveyor Chain Life | 1 |

* - Not Shown

See Conveyor Cover, 34" Hydraulic Fans, Lights and Fender parts pages for additional decals.

# Poly Floor

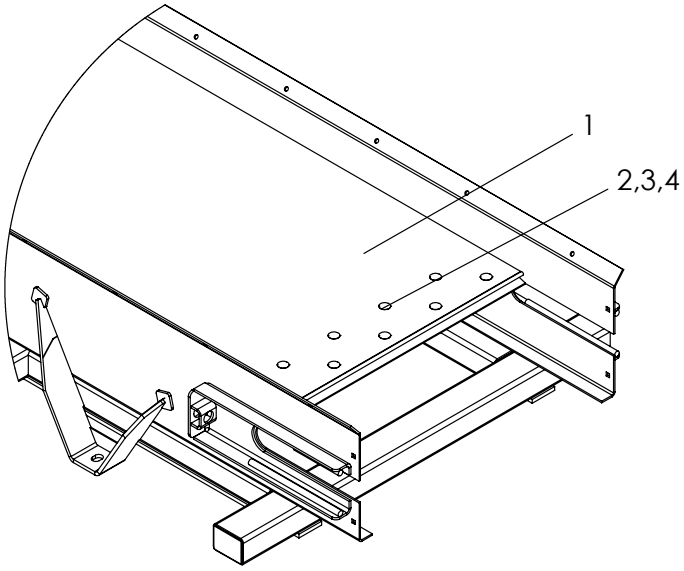


| ITEM | PART NO. | DESCRIPTION | QTY |
|---|---|---|---|
| 1 | 43117-X11 | Floor - Conveyor Poly 16' | 1 |
| 2 | 42639-X1 | Bolt - Elevator .313-18NC X 1" SS | 1 |
| 3 | 36419 | Washer - Lock .313 SS | 1 |
| 4 | 36413 | Nut - Hex .313-18NC SS | AR |

# Antislab Assembly

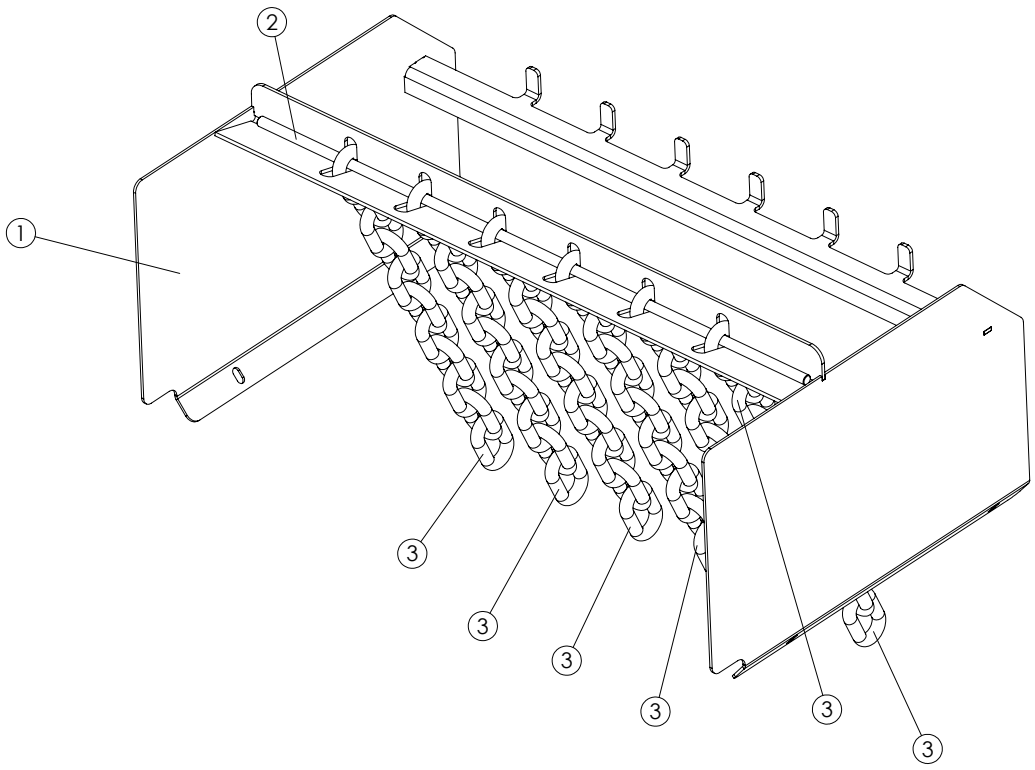


| ITEM | PART NO. | DESCRIPTION | QTY |
|---|---|---|---|
| 1 | 316008 | Support - Wldmt 304 | 1 |
| 2 | 316006 | Round - .5 X 34.00 304 | 1 |
| 3 | 312960 | Chain - .625 X 11 Links | 6 |

This page is intentionally left blank.

## Spinner Divider, Guard & Shields

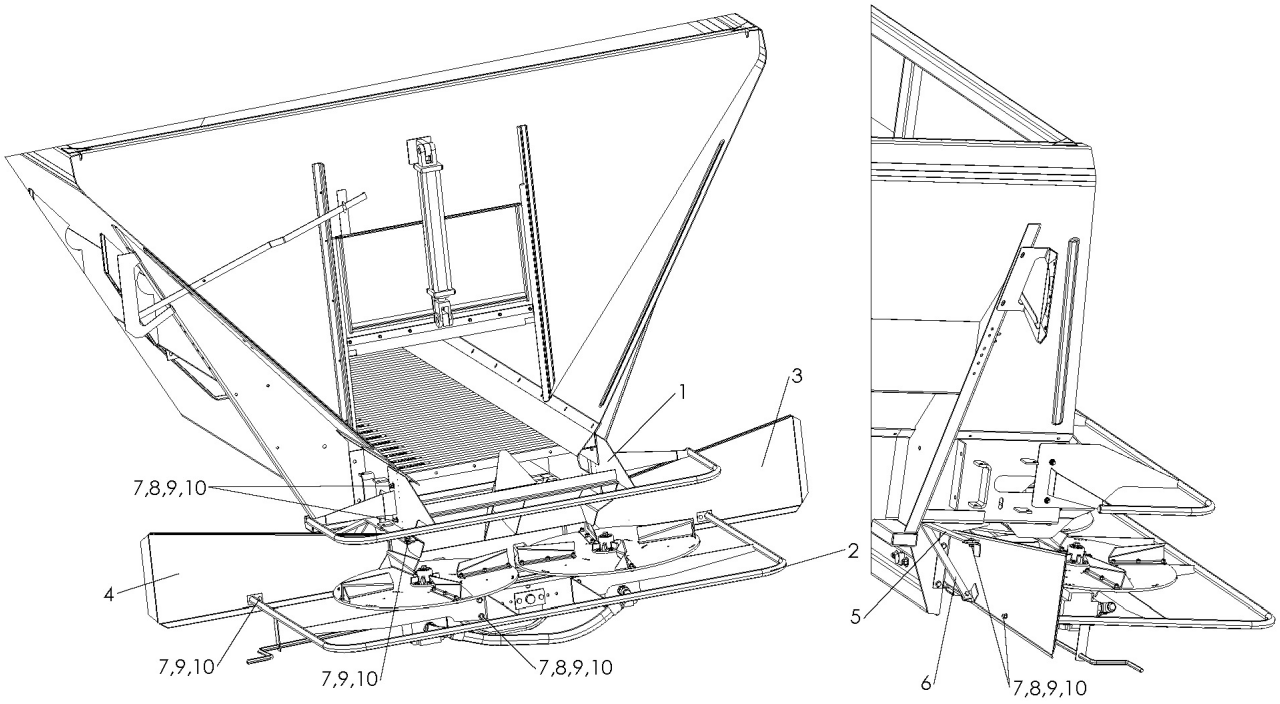


**WARNING** Guards are intended to reduce hazard of entanglement with machinery and injury. All guards must be installed per this drawing before spreader is put into operation.

| ITEM | PART NO. | DESCRIPTION | QTY |
|---|---|---|---|
| 1 | 305309 | Divider – Weldment w/Guard 34" | 1 |
| 2 | 304913 | Guard – Weldment 30" Spinner 304 | 1 |
| 3 | 305320 | Shield – Weldment RH 304 | 1 |
| 4 | 305321 | Shield – Weldment LH 304 | 1 |
| 5 | 87068 | Bracket – Shield 304 | 2 |
| 6 | 305040 | Bar – Stiffener Lower 304 | 2 |
| 7 | 36398 | Cap Screw – 3/8 x 1 SS | 22 |
| 8 | 36425 | Washer – Flat 3/8 SS | 20 |
| 9 | 36420 | Washer – Lock 3/8 SS | 22 |
| 10 | 36414 | Nut – Hex 3/8 SS | 20 |

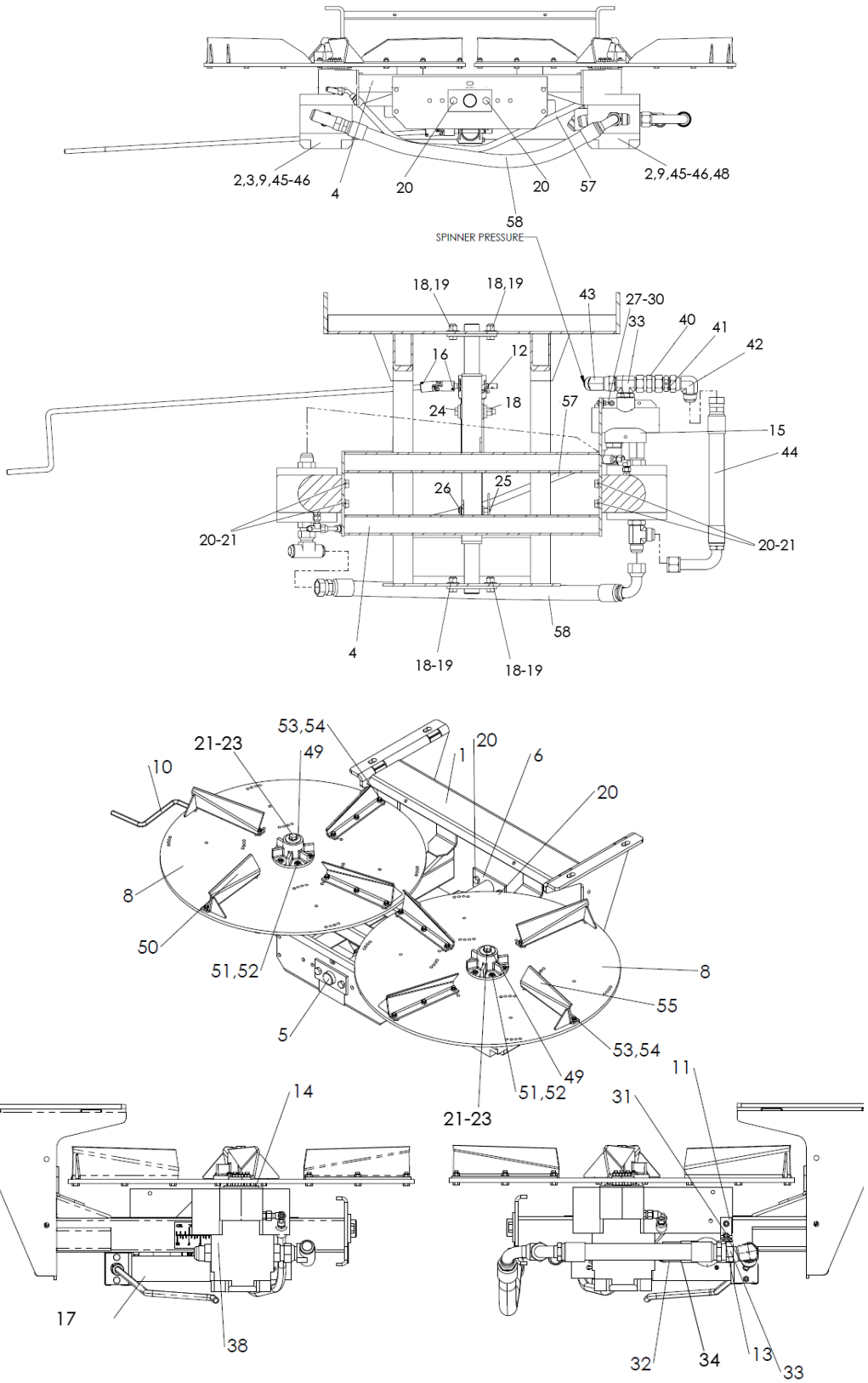
2,3,9,45-46
4
20
20
57
2,9,45-46,48
58
SPINNER PRESSURE
18,19
18,19
43
27-30
33
40
41
42
16
12
24
18
57
15
44
26
25
20-21
20-21
58
4
18-19
18-19
53,54
21-23
49
1
20
6
20
10
8
50
51,52
8
55
5
53,54
49
51,52
21-23
11
31
14
17
38
32
34
13
33

# Spinners

## Spinner Assembly Cont.

| ITEM | PART NO. | DESCRIPTION | QTY |
|---|---|---|---|
| | 314772 | 34" Fan Assembly, Includes 1-59 | 1 |
| | 304899 | 34" Fan – LH Assembly, Includes Items 8, 49-54 | 1 |
| | 304900 | 34" Fan – RH Assembly, Includes Items 8, 50-55 | 1 |
| 1 | 304911 | Plate – Weldment Back | 1 |
| 2 | 313513 | Motor – Hydraulic | 2 |
| 3 | 29825 | Tee - Swivel Nut | 1 |
| 4 | 304897 | Mount – Weldment 30" Disc | 1 |
| 5 | 304898 | Shaft – Weldment 30" Disc 304 | 1 |
| 6 | 87023 | Plate – Mounting Shaft | 1 |
| 7 | 85002 | U-Joint | 1 |
| 8 | 304894 | Disc – LH & RH Spinner 30" | 2 |
| 9 | 29836 | Adapter - Tee Branch | 1 |
| 10 | 307476 | Handle – Jack Feedgate | 1 |
| 11 | 87025 | Angle – Mounting Valve | 1 |
| 12 | 6072 | Zerk – Grease | 2 |
| 13 | 76825 | Hinge - Pipe | 1 |
| 14 | 305571 | Washer – Rubber | 2 |
| 15 | 71781 | Valve – 50/50 Flow Divider | 1 |
| | 56369 | Spool - Compensating | |
| 16 | 312268 | Pin – Roll | 2 |
| 17 | 312975 | Jack – Coated Assembly | 1 |
| 18 | 39016 | Nut – Lock 1/2 | 5 |
| 19 | 36426 | Washer – Flat 1/2 | 4 |
| 20 | 36402 | Cap Screw 1/2-13 NC x 1-1/4 | 14 |
| 21 | 36422 | Washer – Lock 1/2 | 10 |
| 22 | 56397 | Washer – Flat | 2 |
| 23 | 36402 | Cap Screw – 1/2-13 NC x 1/1-4 SS | 2 |
| 24 | 80798 | Cap Screw – 1/2-13 x 3-3/4 | 1 |
| 25 | 36429 | Pin – Hair | 1 |
| 26 | 6547 | Pin – Clevis | 1 |
| 27 | 36412 | Nut – Hex 1/4-20 NC x 1 | 2 |
| 28 | 36418 | Washer – Lock 1/4 SS | 2 |

## Spinner Assembly Cont.

| ITEM | PART NO. | DESCRIPTION | QTY |
|---|---|---|---|
| 29 | 36423 | Washer – Flat 1/4 SS | 1 |
| 30 | 36395 | Cap Screw – 1/4-20 NC x 1 SS | 1 |
| 31 | 308112 | Cap Screw – 1/4-20 NC 1-3/4 | 1 |
| 32 | 34810 | Fitting - 16-16 NS | 1 |
| 33 | 34750 | Fitting – 16-16-16 070429 | 1 |
| 34 | 29840 | Adapter – Elbow | 1 |
| 35 | *36422 | Washer – Lock 1/2 SS | 4 |
| 36 | *36416 | Nut – Hex 1/2-13NC SS | 4 |
| 37 | 304906 | Hose Assembly | 1 |
| 38 | 87110 | Decal – Scale | 1 |
| 39 | 98319 | Decal - Patent | 1 |
| 40 | 302449 | Fitting – 16-16 S1040-38 Non Standard | 1 |
| 41 | 302160-AB | Valve – Check 1” | 1 |
| 42 | 29807 | Fitting – 16-16 070221 | 1 |
| 43 | 29806 | Fitting – 16-16 070321 | 1 |
| 44 | 56103-X1 | Hose – Assembly 100R2 | 1 |
| 45 | 29803 | Adapter | 3 |
| 46 | 34763 | Adapter - Pipe | 2 |
| 47 | 34816 | Elbow – Hydraulic Fitting | 1 |
| 48 | 305758 | Fitting – 16-16-16 070428 | 1 |
| 49 | 10877 | Hub – Weldment | 2 |
| 50 | 307265 | Fin – LH Weldment | 4 |
| 51 | 20005 | Cap Screw – 1/4-20 x 1 | 12 |
| 52 | 20676 | Nut – Lock 1/4-20 | 12 |
| 53 | 20036-X1 | Cap Screw – 5/16-18NC x 1 | 24 |
| 54 | 20677 | Nut – Lock 5/16-18 | 24 |
| 55 | 307266 | Fin – RH Weldment | 4 |
| 56 | *36426 | Washer – Flat 1/2 SS | 4 |
| 57 | 304907 | Hose - Assembly | 1 |
| 58 | 304905 | Hose - Assembly 100R2 | 1 |
| 59 | *36940 | Bolt - Carriage 1/2-13 NC x 2 SS | 4 |
| 60 | *36426 | Washer - Flat 1/2 SS | 4 |

* - Not Shown - Used to attach spinner to sills.

# Spinners

## Wiper Belt

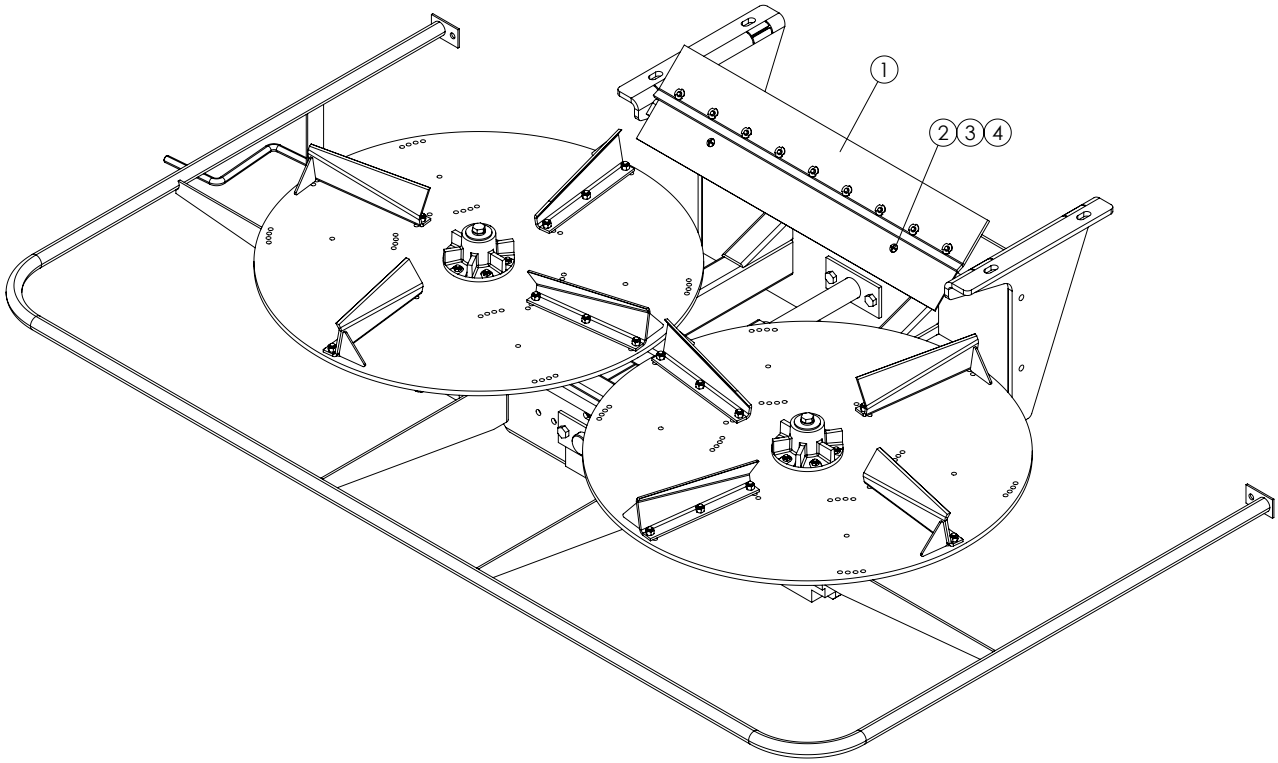


| ITEM | PART NO. | DESCRIPTION | QTY |
|---|---|---|---|
| 1 | 304448 | Wiper - Belt Spnr/Conv. Assy | 1 |
| 2 | 32446 | Screw - Truss Head .25-20 X .75 SS | 2 |
| 3 | 36412 | Nut - Hex, .25-20NC SS | 2 |
| 4 | 36418 | Washer - Lock .25 SS | 2 |

## Tongue Assembly

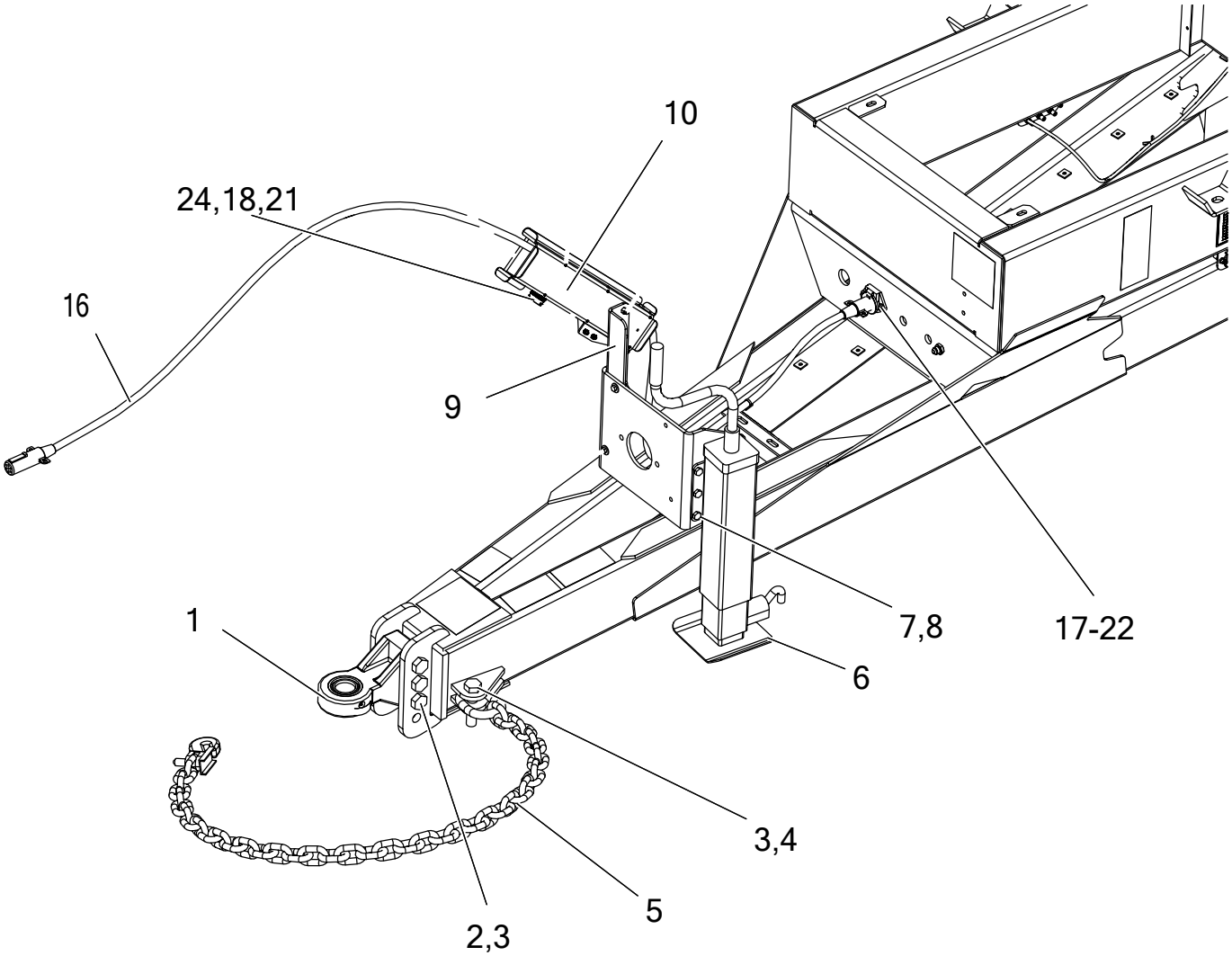


| ITEM | PART NO. | DESCRIPTION | QTY |
|---|---|---|---|
| 1 | 314300 | Hitch - Bull-Pull | 1 |
| 2 | 89545 | Cap Screw - 1-8NC x 7 GR8 | 3 |
| 3 | 20685 | Nut - Lock 1-8NC | 4 |
| 4 | 305702 | Cap Screw - 1-8NC x 4-1/2 GR8 | 1 |
| 5 | 305420 | Chain - Safety 60K | 1 |
| 6 | 305678 | Jack - Wldmt | 1 |
| 7 | 20129 | Cap Screw - 1/2-13NC x 1-1/2 | 6 |
| 8 | 20680 | Nut - Lock 1/2-13NC | 6 |
| 9 | 312885 | Angle - Upright | 1 |
| 10 | 313843 | Channel - Hose Guide | 1 |
| 11 | *20056 | Cap Screw - 5/16-18NC x 6 | 2 |

## Tongue Assembly Cont.

| ITEM | PART NO. | DESCRIPTION | QTY |
|---|---|---|---|
| 12 | *20677 | Nut - Lock 5/16-18NC | 2 |
| 13 | *20318 | Bolt - Carriage 3/8-16NC x 1 | 3 |
| 14 | *20678 | Nut - Lock 3/8-16NC | 5 |
| 15 | *20068 | Cap Screw - 3/8-16NC x 1-1/4 | 2 |
| 16 | 312888 | Cord - Connector Lighting 12' | 1 |
| 17 | 9011-0-7102 | Receptacle - 7 Way Flush Mount | 1 |
| 18 | 20037 | Cap Screw - 5/16-18NC x 1-1/4 | 2 |
| 19 | 20711 | Washer - Lock 5/16 | 2 |
| 20 | 20692 | Washer - Flat 5/16 | 2 |
| 21 | 20643 | Nut - Hex 5/16-18NC | 2 |
| 22 | 9011-0-7103 | Boot - Receptacle | 1 |
| 23 | *312893 | Harness - Main TR3000 | 1 |
| 24 | 312887 | Plug - Stor-A-Way 7 Pole | 1 |
| 25 | *20003 | Cap Screw - 1/4-20NC x 3/4 | 2 |
| 26 | *20676 | Nut - Lock 1/4-20NC | 2 |
| 27 | *313050 | Receptacle - Assy Storage ISOBUS | 1 |
| 28 | *99674 | Tie - Wire | AR |
| 29 | *312894 | Harness - ISOBUS Implement Extension | 1 |
| 30 | *310648 | Tie - Dual Clamp | 5 |
| 31 | *21655 | Grommet - Rubber | 2 |
| 32 | 305266 | Clamp - Hose 1.18" Double | AR |
| 33 | 305267 | Plate - Cover Hose Clamp 304 | AR |

* - Not Shown
AR - As Required

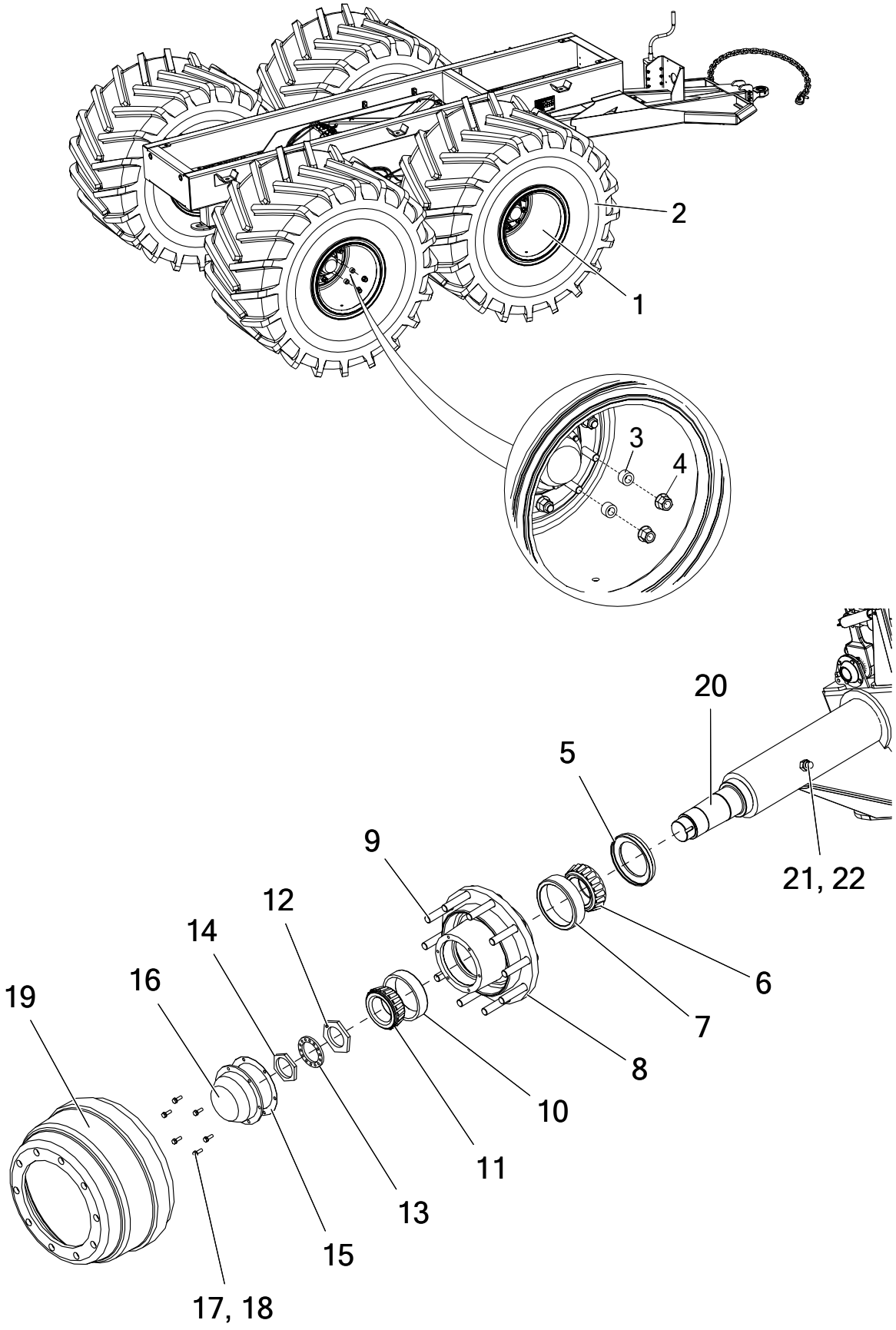
2
1
3
4
20
5
9
12
14
16
19
6
7
8
10
11
13
15
17, 18
21, 22

## Wheel End & Tires Cont.

| ITEM | PART NO. | DESCRIPTION | QTY |
|---|---|---|---|
| | 307279-AA | Tire - Assy Mounted Bias-Ply, LH | 2 |
| | 307279-AB | Tire - Assy Mounted Bias-Ply, RH | 2 |
| | 304926 | Hub - Assy, Includes Items 4, 7-9, 11, 19 | 4 |
| 1 | 307280 | Wheel - Rim 25 x 36 White | 4 |
| 2 | 304929 | Tire - Flotation 66 x 43-25 | 4 |
| 3 | 305794 | Spacer - Wheel Bolt | 40 |
| 4 | 304926-AD | Nut - Flange Swivel M22 x 1.5 | 40 |
| 5 | 304989 | Seal - Grease | 4 |
| 6 | 304936 | Bearing - Inner Cone 759 | 4 |
| 7 | 304926-AE | Bearing - Race Inner | 4 |
| 8 | 304926-AA | Hub | 4 |
| 9 | 304926-AC | Stud | 40 |
| 10 | 304926-AF | Bearing - Race Outer | 4 |
| 11 | 304937 | Bearing - Outer Cone 740 | 4 |
| 12 | 304938 | Spindle Nut - Inner | 4 |
| 13 | 304940 | Washer - Spindle Lock | 4 |
| 14 | 304939 | Spindle Nut - Outer | 4 |
| 15 | 304986 | Gasket - Hub Cap | 4 |
| 16 | 307283 | Cap - Hub White | 4 |
| 17 | 20036 | Cap Screw - 5/16-18NC x 1 | 24 |
| 18 | 20711 | Washer - Lock 5/16 | 24 |
| 19 | 304926-AB | Drum - Brake | 4 |
| 20 | 304925 | Spindle - A26 | 4 |
| 21 | 58560 | Cap Screw - 3/4-10NC x 7 | 4 |
| 22 | 20683 | Nut - Lock 3/4-10NC | 4 |
| 23 | *306671 | Plug - Plastic Tapered | 4 |

* - Not Shown

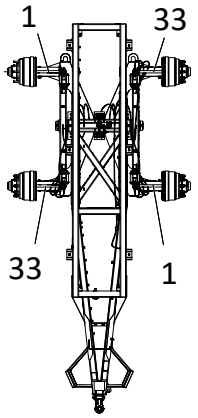
1
33
33
1

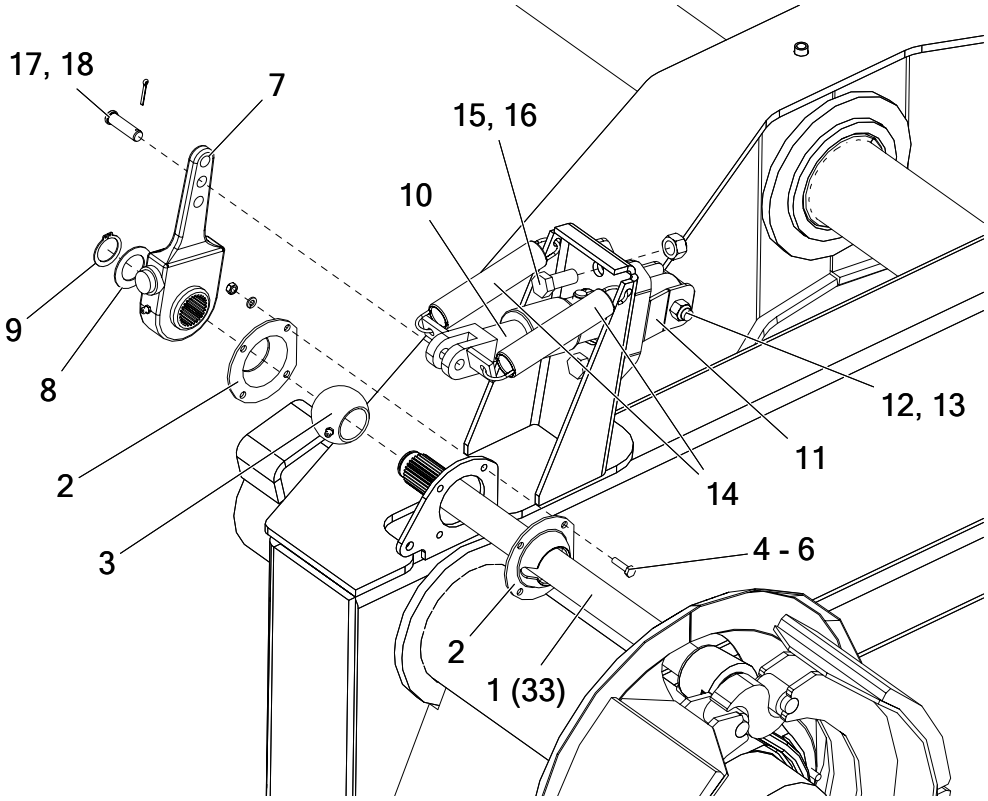
17, 18
7
15, 16
10
9
8
2
3
12, 13
11
14
4 - 6
2
1 (33)

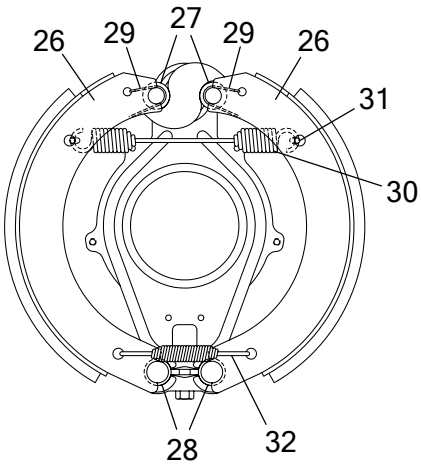
26
29
27
29
26
31
30
28
32

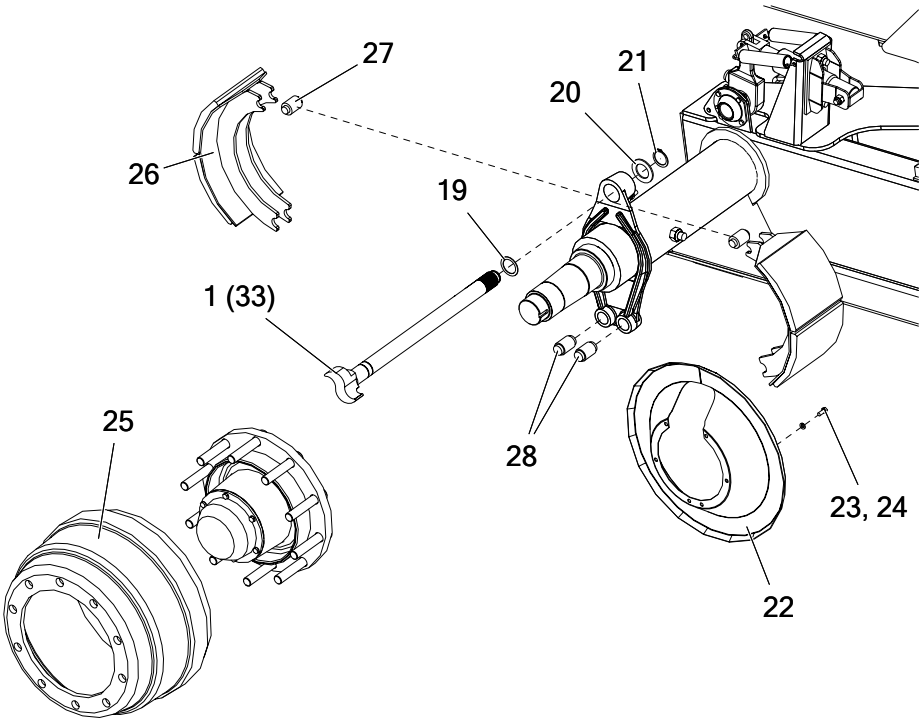
27
21
20
26
19
1 (33)
28
23, 24
25
22

## Hydraulic Brakes Cont.

| ITEM | PART NO. | DESCRIPTION | QTY |
|---|---|---|---|
| | 304928 | Brake Shoe - Assy, Includes Items 26 - 32 | 4 |
| 1 | 304934 | Cam Shaft - RH | 2 |
| 2 | 304932 | Cover - Cam Bushing | 8 |
| 3 | 304987 | Bushing - Cam | 4 |
| 4 | 20005 | Cap Screw - 1/4-20NC x 1 | 16 |
| 5 | 20710 | Washer - Lock 1/4 | 16 |
| 6 | 20642 | Nut - Hex 1/4-20NC | 16 |
| 7 | 304935 | Slack Adjuster | 4 |
| 8 | 304980 | Spacer - Cam 1-1/4 | 4 |
| 9 | 304981 | Snap Ring - 1-1/2 | 4 |
| 10 | 305358 | Cylinder - Ram 1.5 x 3 | 4 |
| 11 | 305369 | Mount - Wldmt Ram Brake | 4 |
| 12 | 20135 | Cap Screw - 1/2-13NC x 3 | 4 |
| 13 | 20680 | Nut - Lock 1/2-13NC | 4 |
| 14 | 305359 | Spring - Ext | 8 |
| 15 | 20175 | Cap Screw - 5/8-11NC x 1-1/2 | 8 |
| 16 | 20682 | Nut - Lock 5/8-11NC | 8 |
| 17 | 21028 | Pin - Clevis | 4 |
| 18 | 20817 | Pin - Cotter | 4 |
| 19 | 304978 | Spacer - Cam 1-1/4 | 4 |
| 20 | 304979 | Spacer - Cam 1-1/2 | 4 |
| 21 | 304982 | Snap Ring - 1-1/4 | 4 |
| 22 | 304984 | Dust Shield | 4 |
| 23 | 20034 | Cap Screw - 5/16-18NC x 3/4 | 24 |
| 24 | 20711 | Washer - Lock 5/16 | 24 |
| 25 | 304926-AB | Drum - Brake | 4 |
| 26 | 304928-AA | Brake - Shoe | 8 |
| 27 | 304928-AB | Roller | 8 |
| 28 | 304928-AD | Pin - Anchor | 8 |
| 29 | 304928-AC | Retainer - Roller | 8 |
| 30 | 304928-AF | Spring - Return | 4 |
| 31 | 304928-AE | Retainer - Spring Return | 8 |
| 32 | 304928-AG | Spring - Retainer | 4 |
| 33 | 304933 | Cam Shaft - LH | 2 |

## Hydraulic Brakes Cont.

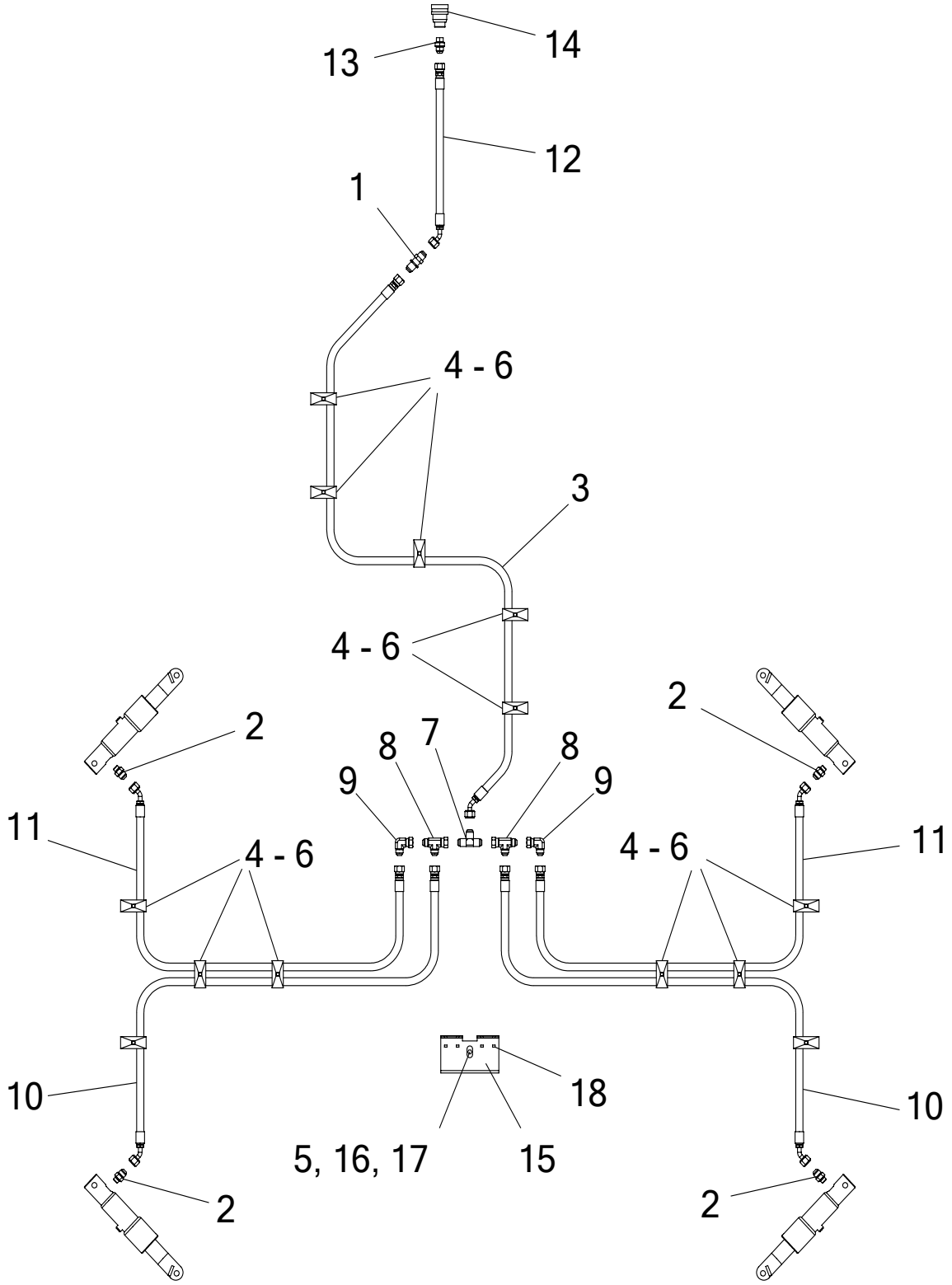

## Hydraulic Brakes Cont.

| ITEM | PART NO. | DESCRIPTION | QTY |
|---|---|---|---|
| 1 | 34839 | Fitting - 8-8 070601 | 1 |
| 2 | 34809 | Fitting - 8-6 070120 | 4 |
| 3 | 305408 | Hose - Assy SAE 6 100R1 x 124 | 1 |
| 4 | 305410 | Clamp - Tubing Twin 5/8 SS | 13 |
| 5 | 20711 | Washer - Lock 5/16 | 14 |
| 6 | 20038 | Cap Screw - 5/16-18NC x 1-1/2 | 13 |
| 7 | 86419 | Fitting - 8-8-8 070401 | 1 |
| 8 | 34804 | Fitting - 8-8-8 070432 | 2 |
| 9 | 34803 | Fitting - 8-8 070221 | 2 |
| 10 | 305409 | Hose - Assy SAE 6 100R1 x 96 | 2 |
| 11 | 306049 | Hose - Assy SAE 6 100R1 x 84 | 2 |
| 12 | 307304 | Hose - Assy SAE 6 100R1 x 132 | 1 |
| 13 | 306050 | Fitting - 8-18 x 1.5 070187 | 1 |
| 14 | 305416 | Coupling - Disconnect | 1 |
| 15 | 306058 | Bracket - Fitting Bulkhead | 1 |
| 16 | 20692 | Washer - Flat 5/16 | 1 |
| 17 | 20032 | Cap Screw - 5/16-18NC x 1/2 | 1 |
| 18 | 99674 | Tie - Wire | AR |

AR = As Required

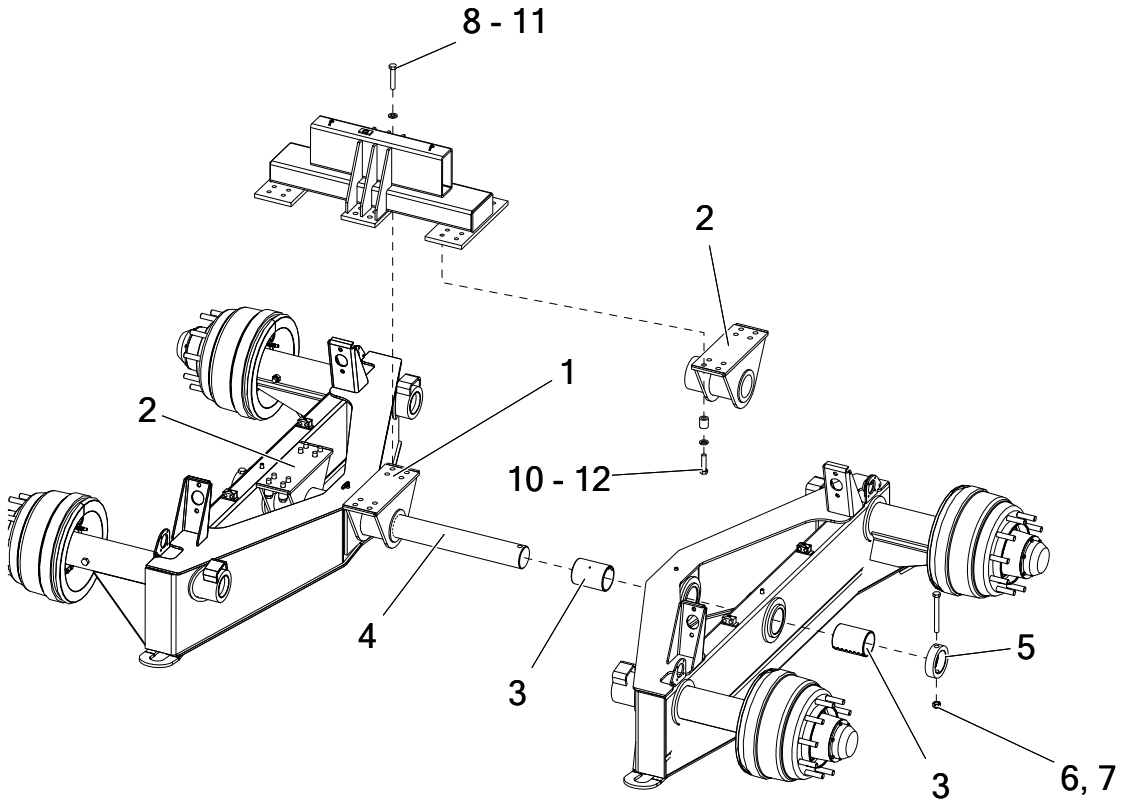


| ITEM | PART NO. | DESCRIPTION | QTY |
|---|---|---|---|
| | | | |
| 1 | 305663 | Hanger - Wldmt Center | 1 |
| 2 | 305664 | Hanger - Wldmt Side | 2 |
| 3 | 309351 | Bushing - Walking Beam | 4 |
| 4 | 309350 | Shaft - Pivot | 1 |
| 5 | 304991 | Retainer - Pivot | 2 |
| 6 | 58560 | Cap Screw - 3/4-10NC x 7 | 2 |
| 7 | 20683 | Nut - Hex 3/4-10NC | 2 |
| 8 | 303692 | Cap Screw - 3/4-10NC x 4 GR8 | 8 |
| 9 | 97015 | Nut - Hex 3/4-10NC GR8 | 8 |
| 10 | 34579 | Washer - Flat 3/4 Hardened | 24 |
| 11 | 305795 | Spacer - Bolt | 24 |
| 12 | 89538 | Cap Screw - 3/4-10NC x 3 GR8 | 16 |

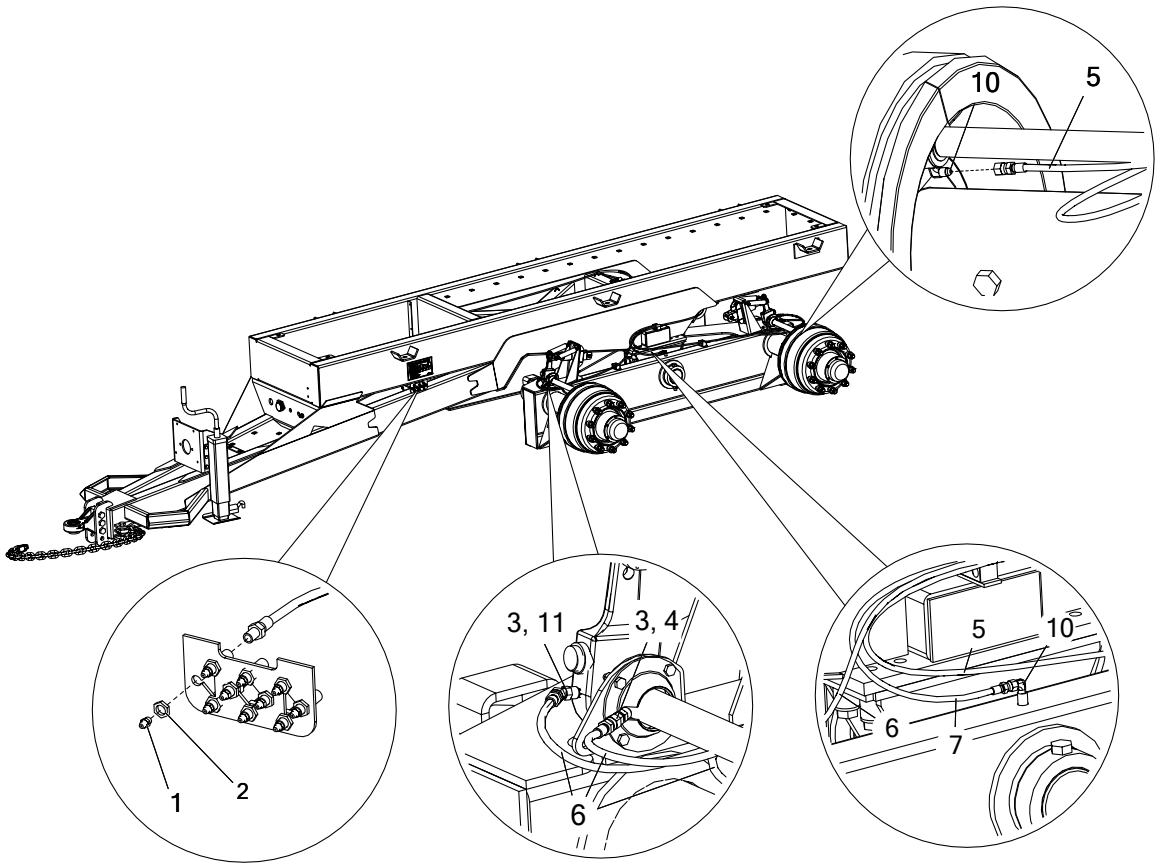


| ITEM | PART NO. | DESCRIPTION | QTY |
|---|---|---|---|
| 1 | 6072 | Zerk - Grease | 19 |
| 2 | 310471 | Nut - Bulkhead | 19 |
| 3 | 34798 | Adapter - Zerk | 8 |
| 4 | 34787 | Adapter - NPT to JIC | 4 |
| 5 | 310472 | Hose - Assy 1/8 x 204, to Rear Wheel | 6 |
| 6 | 310473 | Hose - Assy 1/8 x 186, to Front Wheel | 6 |
| 7 | 310474 | Hose - Assy 1/8 x 156, to Outer Walking Beam | 2 |
| 8 | *310476 | Hose - Assy 1/8 x 132, to Hanger | 3 |
| 9 | *310477 | Hose - Assy 1/8 x 126, to Inner Walking Beam | 2 |
| 10 | 34734 | Adapter - Elbow 90° | 11 |
| 11 | 34735 | Fitting - 4-2 070302 | 4 |
| 12 | *99674 | Tie - Wire | 40 |

* - Not Shown

## Safety Decals

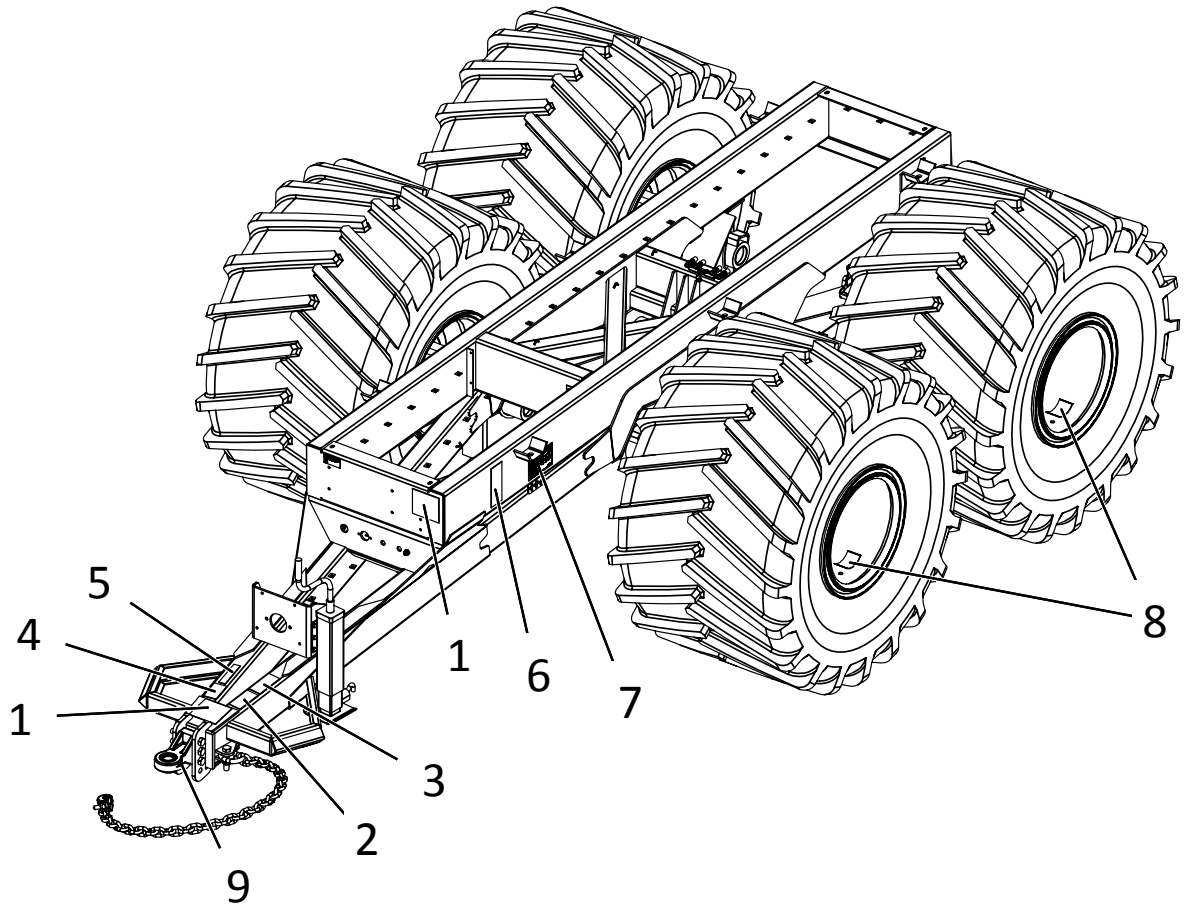


| ITEM | PART NO. | DESCRIPTION | QTY |
|---|---|---|---|
| 1 | 305281 | Decal - Caution, Braking Requirements | 2 |
| 2 | 313858 | Decal - Caution, Towing Requirements | 1 |
| 3 | 305289 | Decal - Caution, Tipping Hazard | 1 |
| 4 | 305298 | Decal - Caution, Weight Restrictions | 1 |
| 5 | 39017 | Decal - No Step | 1 |
| 6 | 305275 | Decal - Trailer Tire Speed | 2 |
| 7 | 310450 | Decal - Lubrication Chart | 2 |
| 8 | 305745 | Decal - Notice, Wheel Lug Tightening | 4 |
| 9 | 305239 | Decal - Grease | 2 |

NOTE: Refer to "Safety Decals" and "Informational Decals" in Safety section of operator's manual for details.