NL5000G5 Case IH
Single Bin / MultApplier / MultiBin
Parts Manual

UNIT SERIAL NUMBER _____

INSERT SERIAL NUMBER_____

MANUAL NUMBER: 314521-AB-C

EFFECTIVE 06/2020

NEW LEADER MANUFACTURING

1330 76TH AVE SW
CEDAR RAPIDS, IA 52404-7052
PHONE (800) 363-1771 | FAX (319) 286-3350
www.newleader.com

Copyright 2019 Highway Equipment Company, Inc.
Now doing business as New Leader Manufacturing

Table of Contents

Table of Contents 2
Interactive Features 4
Instructions for Ordering Parts 5
Body 6
- Inverted "V" 6
- Sight Window 7
- Side Boards - With Insert 8
- Frame Cover 9
- Lubrication 10
- Fenders 12

Endgate 14
- Endgate Assembly 14

Fenders 15
Body Hydraulics 16
- Main Bin 16
- Spreader Control Valve Assy 24
- Cylinder Control Valve Assy 26
- Hydraulic Reservoir w/ Cooler 28
- Hydraulic Reservoir 30
- Left Hand Hydraulics - Insert 32
- MultApplier 34
- MultiBin, Single Micro 38
- MultiBin, Dual Micro 40
- MultiBin, Dual Micro 41

Conveyor 42
- #4 Belt-Over-Chain Conveyor 42
- Chain Shields 43
- Conveyor Idler 44
- Conveyor Drive 45
- Gearcase Assembly 46
- Gearcase Service Parts 47
- Gearcase Breather Tube 48
- Encoder 49
- Conveyor Chain Oiler 50
- Wiper - Front 52
- Front Conveyor Guard 53

Electronics 54
- Bin Sensors 54
- Enclosure Assembly Mount 55
- Enclosure Assembly 56
- Hydraulic Reservoir Sensors 58
- Spinner Speed Sensors 59
- Controller - Main Bin 60
- Controller - MultApplier 64
- Controller - MultiBin 66
- Body Module 68
- Switch Box & Harness 70

Decals 72
Spinners 74
- Material Divider 74
- Hillside Divider 75
- Vane Assembly 76
- Spinner Guards & Deflectors 77

Spinner Assembly....78
MultApplier....84
MultApplier....84
Rear Feedgate....86
Rear Feedgate....87
Hillside Divider & Conveyor Cover....88
Front Feedgate....89
Front Wiper....90
Sealers....91
#4 Belt-Over-Chain Conveyor....92
Chain Shields....93
Conveyor Idler....94
Conveyor Drive & Encoder....95
Hydraulics....96
Lubrication....98
Electrical....100
Pads....101
Decals....102
MultiBin....104
MultiBin....104
Rear Feedgate....105
Divider....106
Front Feedgate....107
Front Wiper....108
Sealers....109
#4 Belt-Over-Chain Conveyor, Bin 2....110
Chain Shields, Bin 2....111
Conveyor Idler....112
Conveyor Drive & Encoder....113
Hydraulics....114
Hydraulics Cont....115
Lubrication....116
Electrical....118
Pads....120
Decals....121
Panel Group - Single Micro....122
Divider Panel - Dual Micro....123
Micro Group....124
Micro Assembly....126
Micro Screens....130
Micro Cover Group....131
Micro Cover Assembly....132
Micro Cover Lid Pneumatics....134
Micro Cover Air Cylinder....136

Interactive Features

NOTE:	This manual incorporates several interactive features to provide supplemental information and ease of navigation. The information below is to aid in the identification and use of these features.

Hyperlinks

Hyperlinks provide direct access to a specific destination when clicked. The entire Table of Contents of this manual is hyperlinked to provide quick access to all sections of this manual when viewing the electronic version.

Hyperlinks within the content are denoted by **blue, bold underlined text**. Electronic format viewers can click these links for direct access to New Leader online features. Internet access is required.

Instructions for Ordering Parts

NEW LEADER MANUFACTURING

Order from the **AUTHORIZED DEALER** in your area.

Always give the pertinent model and serial number.

Give part name, part number and the quantity required.

Give the correct address to where the parts are to be shipped, and the carrier if there is a preference.

Unless claims for shortages or errors are made immediately upon receipt of goods they will not be considered. Any part returns should be directed through the dealer from which they were purchased.

When broken goods are received, a full description of the damage should be made by the carrier agent on the freight bill. If this description is insisted upon, full damage can always be collected from the transportation company.

No responsibility is assumed for delay or damage to merchandise while in transit. Our responsibility ceases upon delivery of shipment to the transportation company from whom a receipt is received showing that shipment was in good condition when delivered to them, therefore, claims (if any) should be filed with the transportation company and not with Highway Equipment Company.

If your claims are not being handled (by the transportation company) to your satisfaction, please call our Product Sales & Support Department at Highway Equipment Company at (800) 363-1771 for assistance.

In the parts list the following symbols and abbreviations stand for:

* - Not Shown
AR – As Required
CS – Carbon Steel
SS – Stainless Steel
NS – Not Serviced

The parts listed under the different steel types (CS, 409 SS and 304 SS) are for that type of unit and do not necessarily mean the part is made of that type of steel.

Body

Inverted "V"

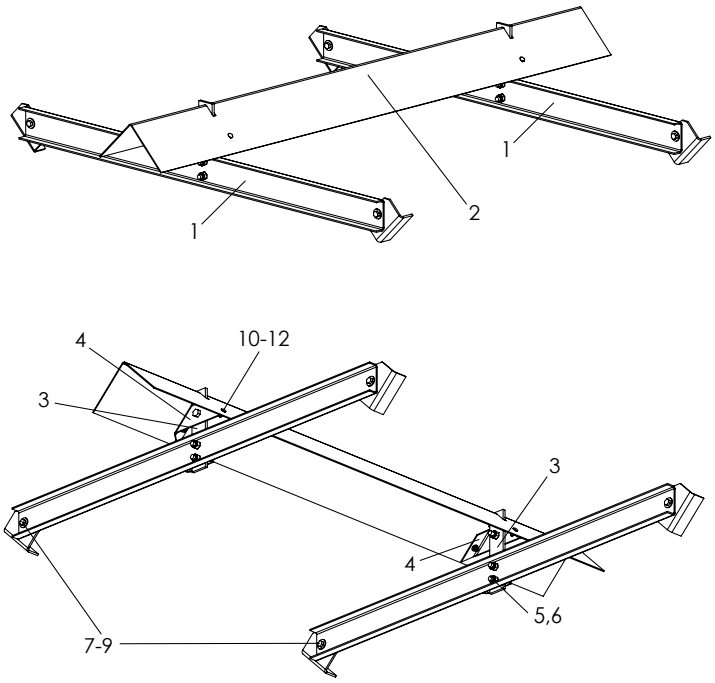

ITEM	PART NO.	DESCRIPTION	QTY		
	304 SS		11'-12'	13'-14'	15'-16'
1	81263	Hanger – V Wldmt	2	3	3
2	82622 82623 82624	Inverted V - 7' Inverted V – 9' Inverted V - 11'	1 - -	- 1 -	- - 1
3	308646	Bar – Adjusting	2	3	3
4	302371	Bracket – V Bolt-on	2	3	3
5	58800	Cap Screw – 5/8-11NC x 1-3/4 SS	6	9	9
6	41762	Nut - Lock 5/8-11NC SS	6	9	9
7	36402	Cap Screw - 1/2-13NC x 1-1/4 SS	4	6	6
8	36426	Washer - Flat 1/2 SS	4	6	6
9	39016	Nut - Lock 1/2-13NC SS	4	6	6
10	42639	Bolt - Carriage 5/16-18NC x 1 SS	4	6	6
11	36424	Washer - Flat 5/16 SS	4	6	6
12	42221	Nut - Lock 5/16-18NC SS	4	6	6

Body

Sight Window

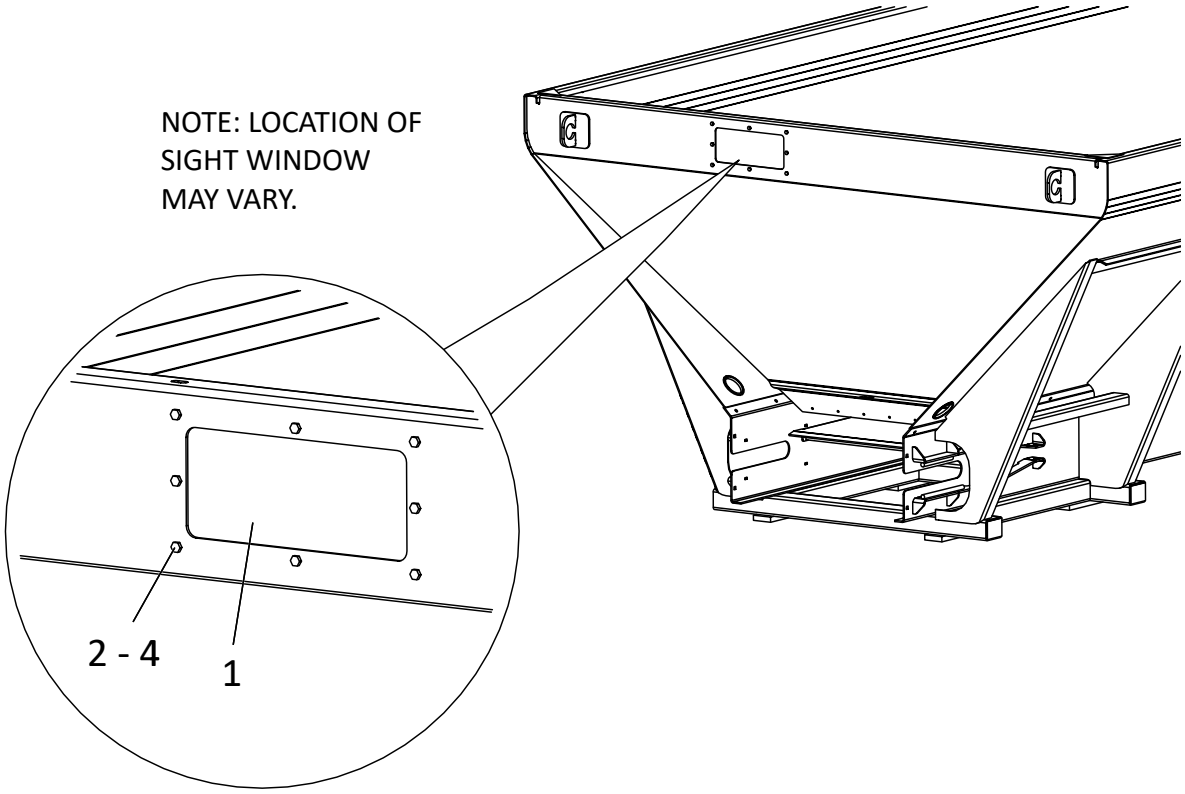

ITEM	PART NO.	DESCRIPTION	QTY
1	302686	Window - Sight 5" x 12"	1
2	36395	Cap Screw - 1/4-20NC x 1 SS	8
3	36423	Washer - Flat 1/4 SS	8
4	42034	Nut - Lock 1/4-20NC SS	8

Body

Side Boards - With Insert

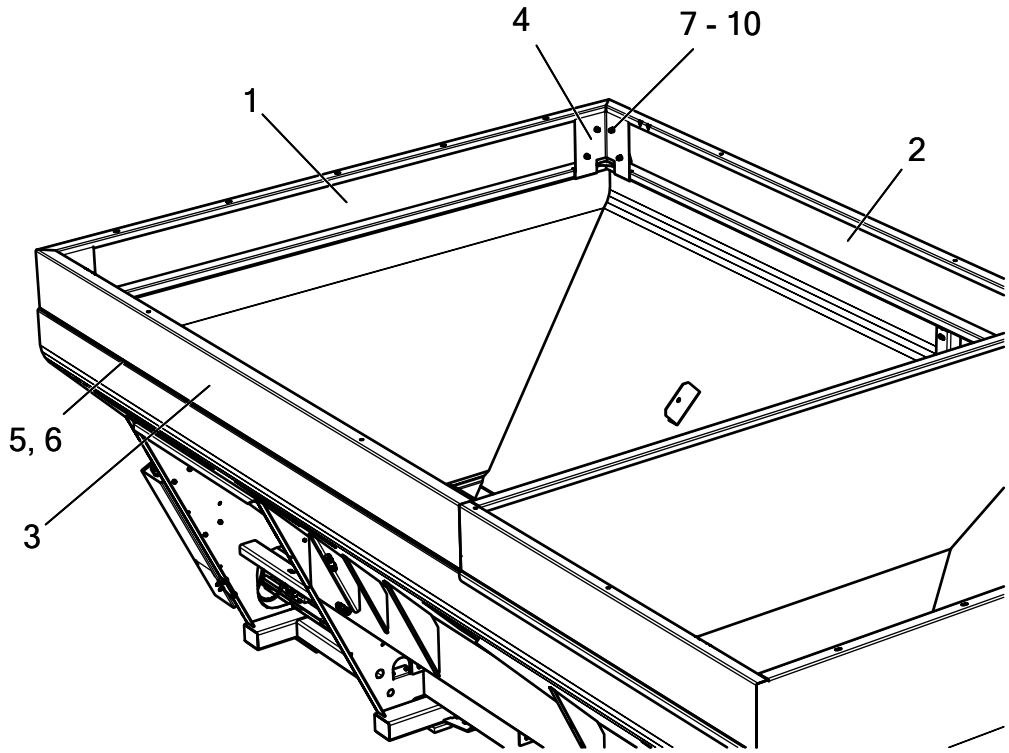

ITEM	PART NO.	DESCRIPTION	QTY
	98746	Kit- Hardware Side Boards SS, Includes Items 7- 10	1
1	312601	Side Board – Wldmt 102”	1
2	312922	RH Side Board Wldmt- 5’	1
	312924	RH Side Board Wldmt- 6’	1
	312602	RH Side Board Wldmt- 7’	1
	312926	RH Side Board Wldmt- 8’	1
	312928	RH Side Board Wldmt- 9’	1
3	312923	LH Side Board Wldmt- 5’	1
	312925	LH Side Board Wldmt- 6’	1
	312603	LH Side Board Wldmt- 7’	1
	312927	LH Side Board Wldmt- 8’	1
	312929	LH Side Board Wldmt- 9’	1
4	86867	Pocket – Side Board	2
5	53950	Rubber – 1/4 x 2-1/4	AR
6	96254-AB	Adhesive – Blk Cyanoacrylate*	AR
7	36398	Cap Screw – 3/8 x 1	12
8	36425	Washer – Flat 3/8 SS	12
9	36420	Washer – Lock 3/8-16 NC SS	12
10	36414	Nut – Hex 3/8-16 NC SS	12

AR- As Required

*- Use adhesive to attach rubber to bottom of side boards.

Body

Frame Cover

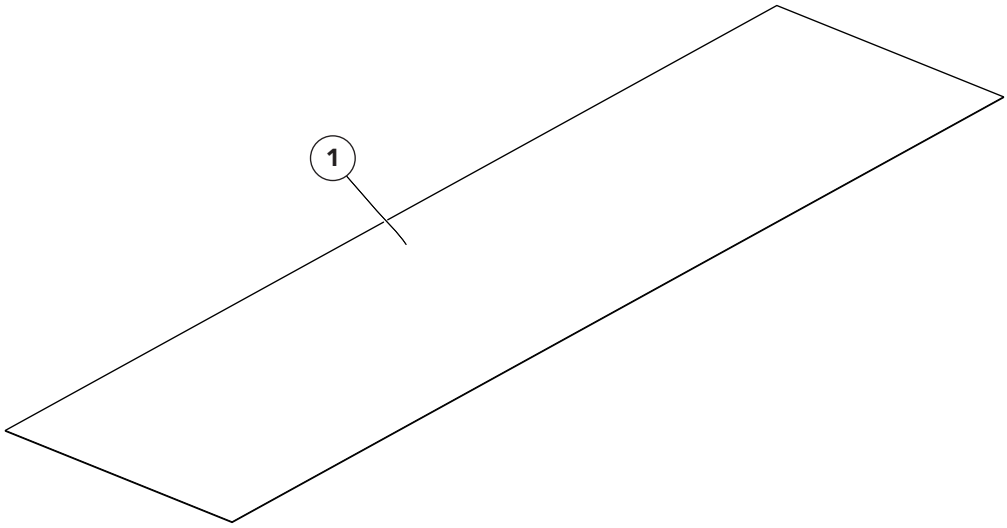

ITEM	PART NO.	DESCRIPTION	QTY
1	56339-AA	Panel- Underbody 13ga 201 34 x 124	1
	56339-AB	Panel- Underbody 13ga 201 34 x 144	1
	56339-AC	Panel- Underbody 13ga 201 34 x 156	1

Body

Lubrication

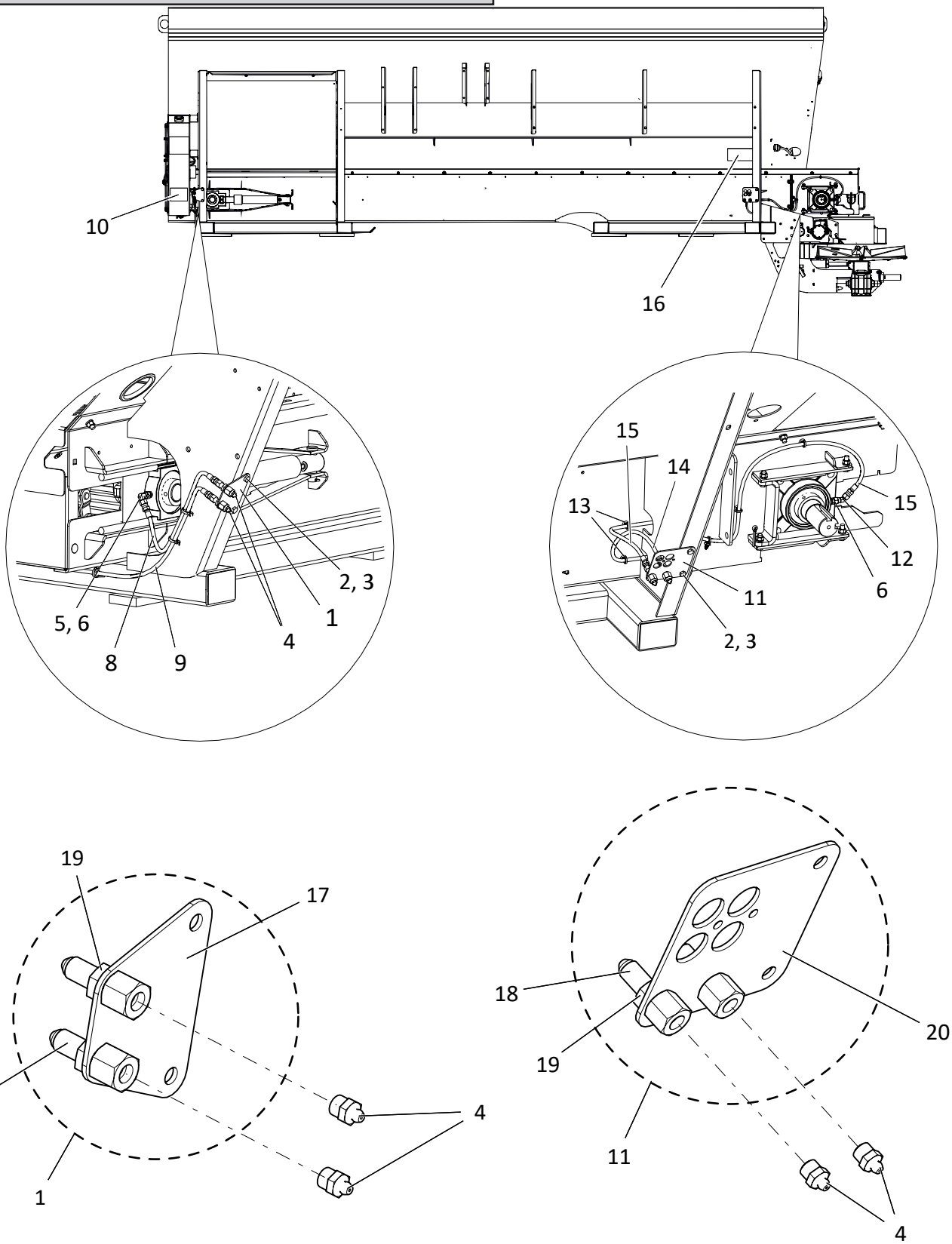

Body

Lubrication Cont.

ITEM	PART NO.	DESCRIPTION	QTY
1	313913	Lube Bank- Assy 2 Position, Includes Items 17- 19	1
2	56858	Cap Screw- 5/16-18NC x 3/4 SS	4
3	42221	Nut- Lock 5/16-18NC SS	4
4	313917	Zerk- Grease 1/8-27 NPT 304	4
5	34787	Fitting- 4-2 070102	4
6	34868	Fitting- 4-4 070221	2
7	99674	Tie - Wire	8
8	313663	Hose - Assy LH Front Bearing	1
9	313664	Hose- Assy RH Front BearinG	1
10	311814	Decal - Lubrication Chart	1
11	313914	Lube Bank - Assy 6 Position, Includes Items 18 - 20	1
12	313501	Fitting - 4-4 070321	2
13	311806	Tie - Wire Fir Tree	14
14	313665	Hose - Assy RH Rear Bearing	1
15	313666	Hose - Assy LH Rear Bearing	1
16	313918	Decal - Lubrication Chart	1
17	313910	Plate - Lube Bank 2 Position 409	1
18	313916	Fitting - 4-2 Non-Standard	4
19	311489	Nut - Bulkhead 4 070118	4
20	313911	Plate - Lube Bank 6 Position 409	1

Body

Fenders

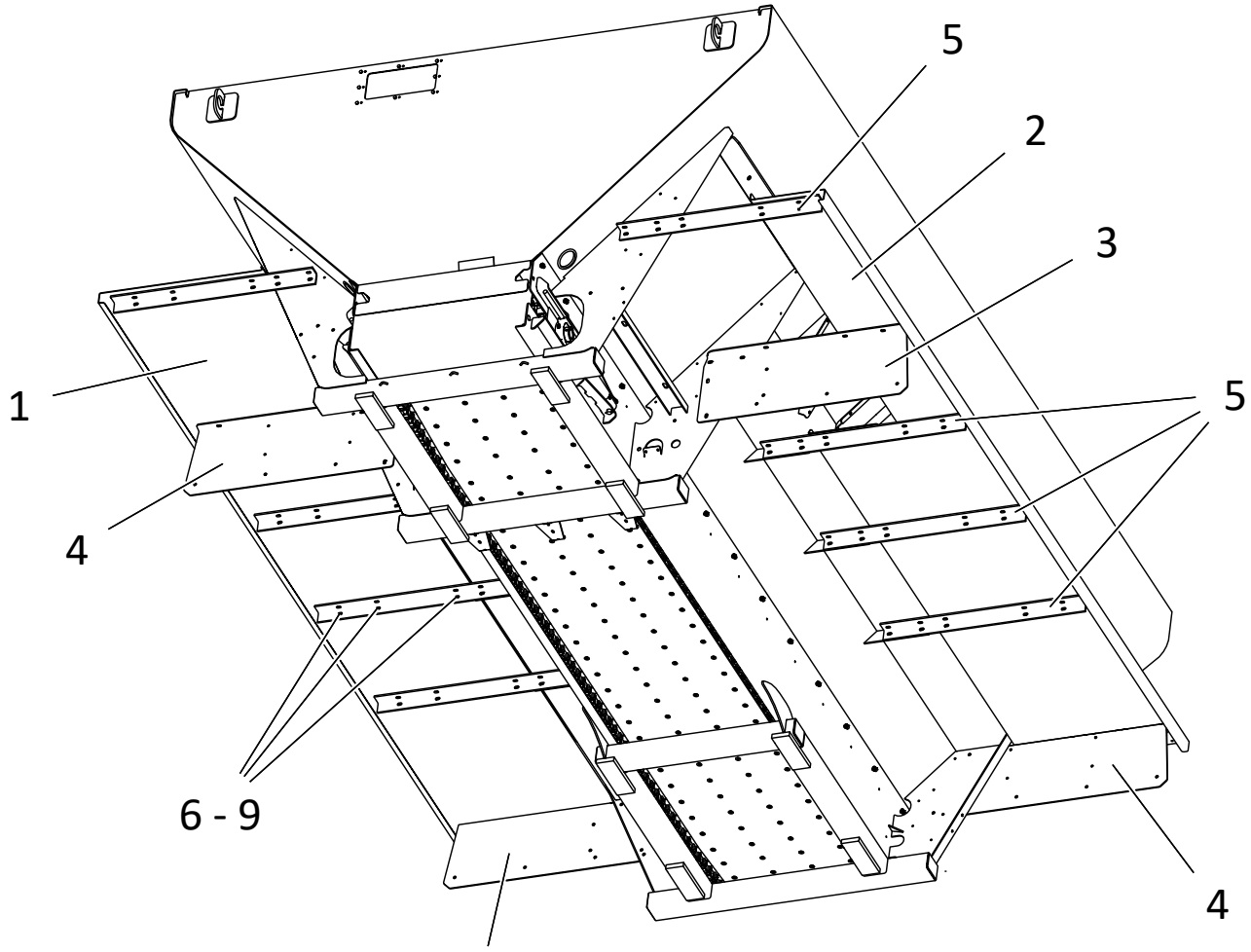

Body

Fenders Cont.

ITEM	PART NO. 304 SS	PART NO. 409 SS	DESCRIPTION	QTY 13'	QTY 14'
	83115	83115	Kit - Hardware SS 11' - 13', Includes Items 6 - 9	1	--
	83116	83116	Kit - Hardware SS 14' - 16', Includes Items 6 - 9	--	1
1	311555	311525	Fender- 13' x 28" RH	1	--
	311558	311528	Fender- 14' x 28" RH	--	1
2	311554	311524	Fender- 13' x 28" LH	1	--
	311557	311527	Fender- 14' x 28" RH	--	1
3	96967	96967	Support- 304	2	2
4	96968	96968	Support- 304	2	2
5	96969	96969	Angle- Fender 304	6	8
6	36408	36408	Bolt- Carriage 3/8-16NC x 1 SS	44	63
7	36414	36414	Nut - Hex 3/8-16NC SS	44	63
8	36425	36425	Washer - Flat 3/8 SS	44	63
9	36420	36420	Washer- Lock 3/8 SS	44	63

Endgate Assembly

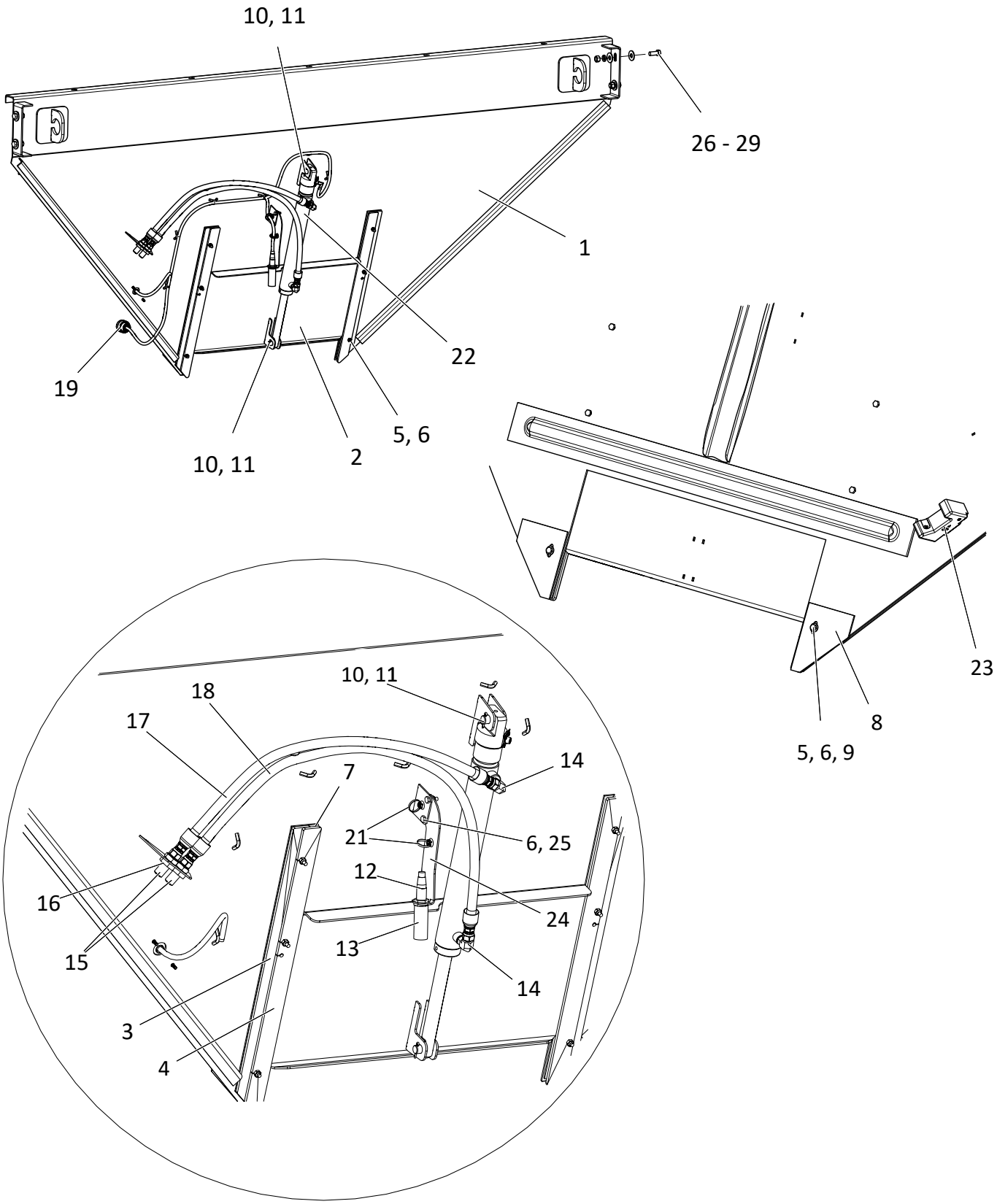

Endgate

Endgate Assembly Cont.

ITEM	PART NO.		DESCRIPTION	QTY
	409 SS	304 SS		
	314259	313502	Endgate - Assembly, Includes Items 1 - 25	1
	86951	86951	Kit - Hardware, Includes Items 26 - 29	1
1	314257	313503	Endgate- Wldmt Rear 102 + 6	1
2	314255	313506	Feedgate- Wldmt 30" 304	1
3	36385	36385	Bar- Feedgate Guide 304	2
4	36384	36384	Bar- Feedgate Slide 304	2
5	312394	312394	Cap Screw- 1/4-20NC x 1-3/8 SS	6
6	42034	42034	Nut- Lock 1/4-20NC SS	8
7	86090	86090	Spacer - Shim Plastic	2
8	305079	305079	Sealer - Endgate Bolt-In 304	2
9	36423	36423	Washer- Flat 1/4 SS	2
10	313173	313173	Pin - Clevis SS	2
11	36427	36427	Pin - Cotter SS	2
12	313377	313377	Sensor - Ultrasonic	1
13	313378	313378	Cover - Sensor	1
14	313465	313465	Fitting - 6-4 520220	2
15	313486	313486	Fitting - 6-6 520601S 304	2
16	313485	313485	Fitting - 6 520118S 304	2
17	313543	313543	Hose - Assy SAE 6 x 30 100R1	1
18	314398	314398	Hose - Assy SAE 6 x 38 100R1	1
19	313999	313999	Harness - Bin 2 Insert Control	1
20	*99674	*99674	Tie - Wire	8
21	311806	311806	Tie - Wire Fir Tree	2
22	312952	312952	Cylinder - 1.5 x 12 w/ Sensor	1
23	98787-AB	98787-AB	Sensor - Bin Level	1
24	313505	313505	Mount - Sensor 304	1
25	36393	36393	Cap Screw - 1/4-20NC x 3/4 SS	2
26	20128-X1	20128-X1	Cap Screw - 1/2-13NC x 1-1/4 GR8	4
27	20695	20695	Washer - Flat 1/2	8
28	20714	20714	Washer - Lock 1/2	4
29	20646	20646	Nut - 1/2-13NC	4
30	-	98476	PIN - CLEVIS .25 X 1.5 SS	1
31	-	41779	PIN - HAIR .073 X 1.438 SS	1

* - Not Shown

Body Hydraulics

Main Bin

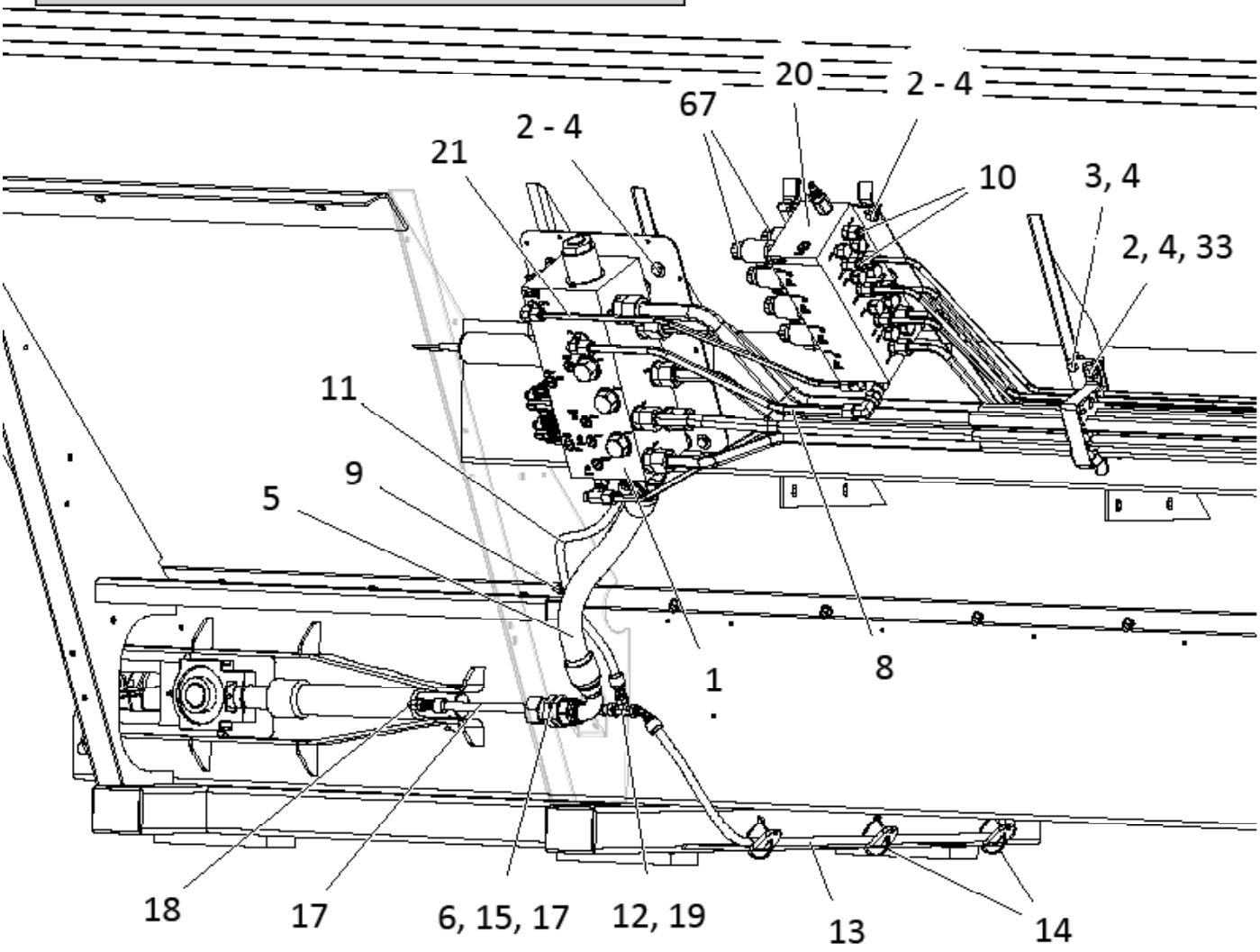

Body Hydraulics

Main Bin Cont.

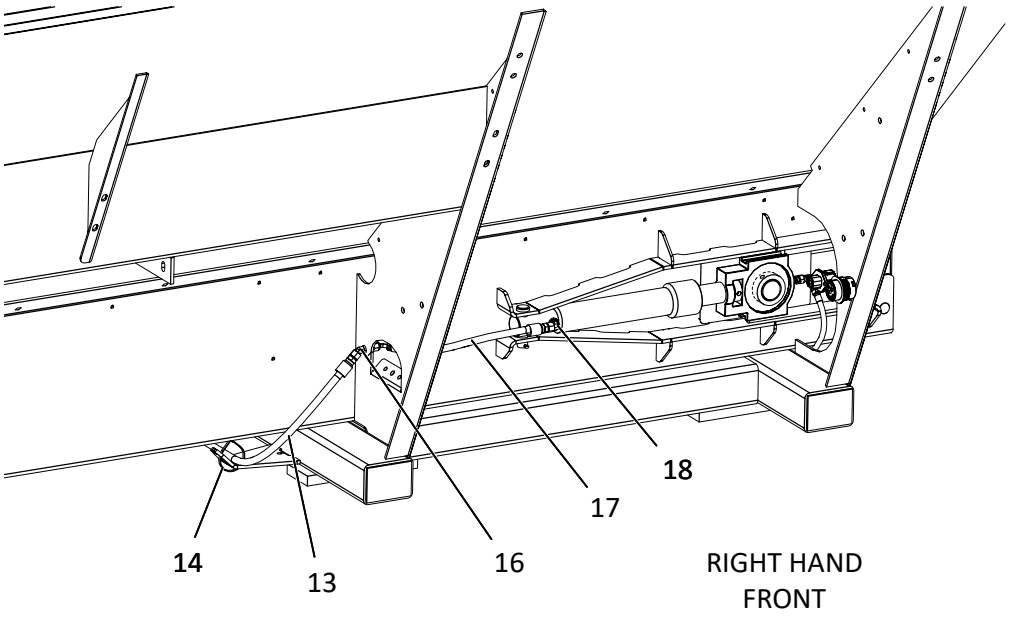

ITEM	PART NO.	DESCRIPTION	QTY
1	313893	Valve - Mounting Assy Spreader Control 40 GPM See "Spreader Valve Assembly" page for details.	1
2	36425	Washer - Flat 3/8 SS	17
3	36398	Cap Screw - 3/8-16NC x 1 SS	16
4	72054	Nut - Lock 3/8-16NC SS	27
5	313554	Hose - Assy SAE 16 x 25-1/4 100R2	1
6	313443	Fitting - 16-16 520601	1
7	312674	Fitting - Cap 16 520112	1
8	313331	Tube - Assy 1/2 x .049 304	1
9	311806	Tie - Wire Fir Tree	1
10	314506	Fitting - Cap 6 520112	2
11	313555	Hose - Assy SAE 4 x 33 100R1	1
12	313440	Fitting - 4-4-4 520958	1
13	313556	Hose - Assy SAE 4 x 52-1/2 100R1	1
14	99674	Tie - Wire	3
15	313444	Fitting - 16 Nut Bulkhead 520118	1
16	313441	Fitting - 4-4 520801	1
17	313557	Hose - Assy SAE 4 x 14-1/4 100R1	2
18	312654	Fitting - 4-4 520220	2

Body Hydraulics

Main Bin Cont.

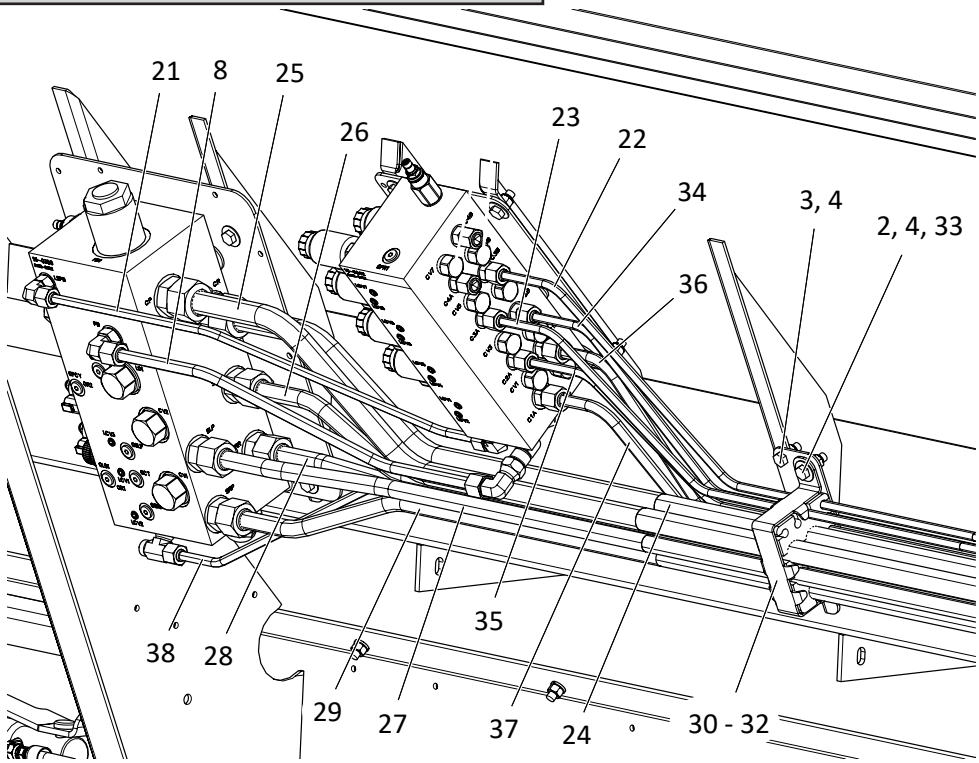

ITEM	PART NO.	DESCRIPTION	QTY
19	313442	Fitting - 4 520118	2
20	313896	Valve - Mounting Assy Cylinder Control See "Cylinder Valve Assy" page for details.	1
21	313332	Tube - Assy 3/8 x .035 304	1
22	314386 313333	Tube - Assy 3/8 x .035 304, 13' Unit Tube - Assy 3/8 x .035 304, 14' Unit	1 1
23	314387 313334	Tube - Assy 3/8 x .035 304, 13' Unit Tube - Assy 3/8 x .035 304, 14' Unit	1 1
24	314381 313325	Tube - Assy 1 x .049 304, 13' Unit Tube - Assy 1 x .049 304, 14' Unit	1 1
25	314380 313324	Tube - Assy 1 x .083 304, 13' Unit Tube - Assy 1 x .083 304, 14' Unit	1 1
26	314379 313321	Tube - Assy 3/4 x .065 304, 13' Unit Tube - Assy 3/4 x .065 304, 14' Unit	1 1
27	314378 313320	Tube - Assy 3/4 x .065 304 , 13' Unit Tube - Assy 3/4 x .065 304, 14' Unit	1 1
28	314377 313323	Tube - Assy 3/4 x .065 304, 13' Unit Tube - Assy 3/4 x .065 304, 14' Unit	1 1
29	314376 313322	Tube - Assy 3/4 x .065 304, 13' Unit Tube - Assy 3/4 x .065 304, 14' Unit	1 1

Body Hydraulics

Main Bin Cont.

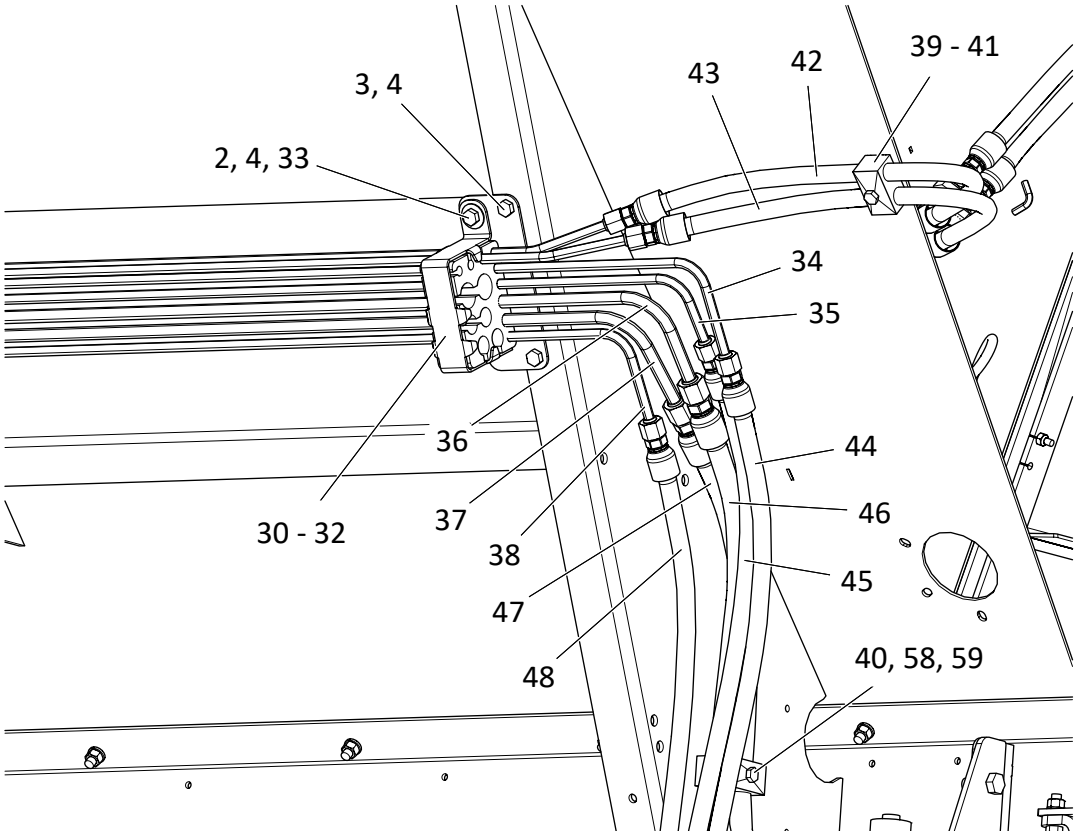

NOTE: Outer tubes & hoses hidden for clarity.

ITEM	PART NO.	DESCRIPTION	QTY
30	313396	Clamp - Rubber Insert	3
31	313395	Clamp - Bar Tube 304	3
32	313394	Plate - Tube Clamp Mount 304	3
33	36399	Cap Screw - 3/8-16NC x 1-1/4 SS	11
34	313330 314385	Tube - Assy 3/8 x .035 304 14' Unit Tube - Assy 3/8 x .035 304 13' Unit	1 1
35	313329 314384	Tube - Assy 3/8 x .035 304 14' Unit Tube - Assy 3/8 x .035 304 13' Unit	1 1
36	313328 314383	Tube - Assy 1/2 x .049 304 14' Unit Tube - Assy 1/2 x .049 304 13' Unit	1 1
37	313327 314382	Tube - Assy 1/2 x .049 304 14' Unit Tube - Assy 1/2 x .049 304 13' Unit	1 1
38	313326 314375	Tube - Assy 3/8 x .035 304 14' Unit Tube - Assy 3/8 x .035 304 13' Unit	1 1

Body Hydraulics

Main Bin Cont.

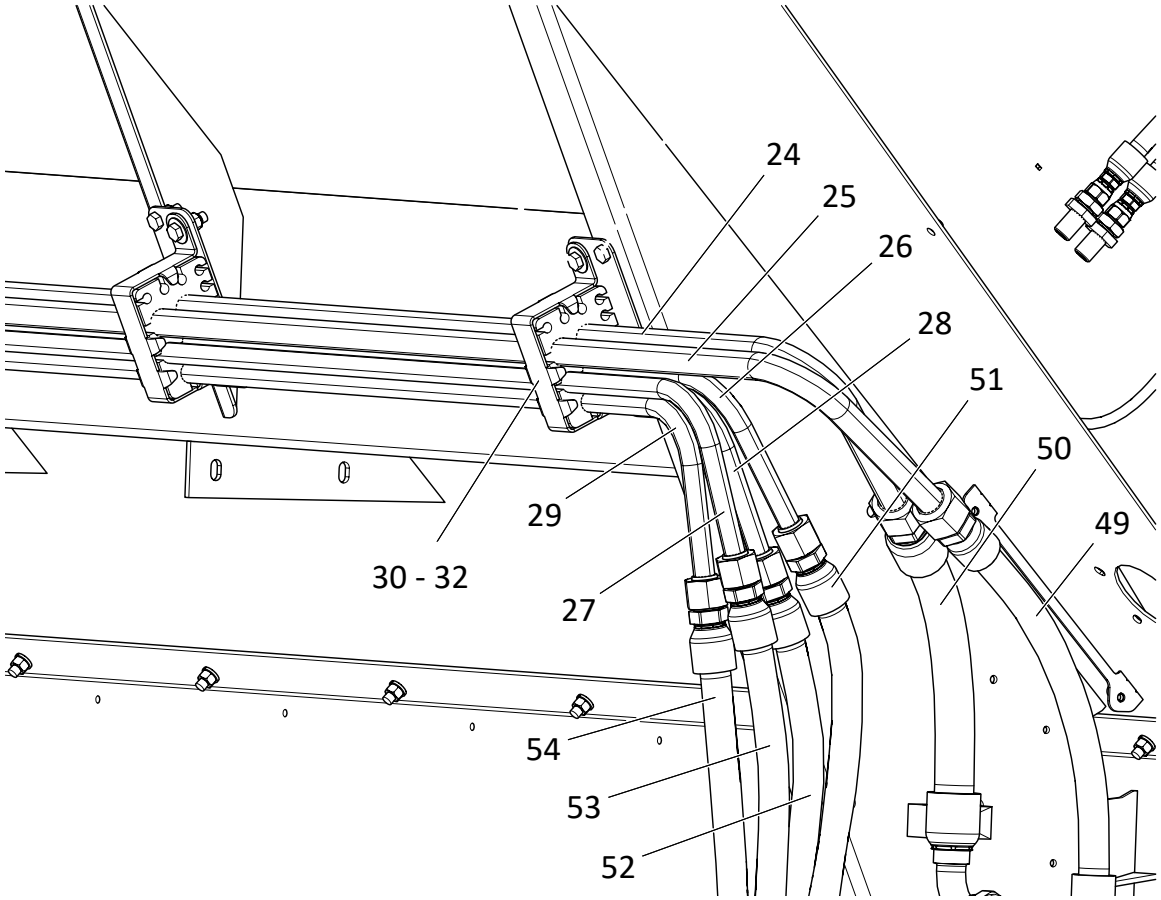

NOTE: Inner tubes & hoses hidden for clarity.

ITEM	PART NO.	DESCRIPTION	QTY
39	309619	Cap Screw - 5/16-18NC x 2 SS	3
40	42221	Nut - Lock 5/16-18NC SS	3
41	305410	Clamp - Tubing Twin 5/8	2
42	313545	Hose - Assy SAE 6 x 27-1/2 100R1	1
43	313546	Hose - Assy SAE 6 x 25-1/4 100R1	1
44	313535	Hose - Assy SAE 6 x 85 100R1	1
45	313537	Hose - Assy SAE 6 x 92-1/4 100R1	1
46	313539	Hose - Assy SAE 8 x 32 100R16	1
47	313540	Hose - Assy SAE 8 x 30-3/4 100R16	1
48	313536	Hose - Assy SAE 6 x 102 100R1	1
49	313541	Hose - Assy SAE 12 x 20-1/2 100R16	1

Body Hydraulics

Main Bin Cont.

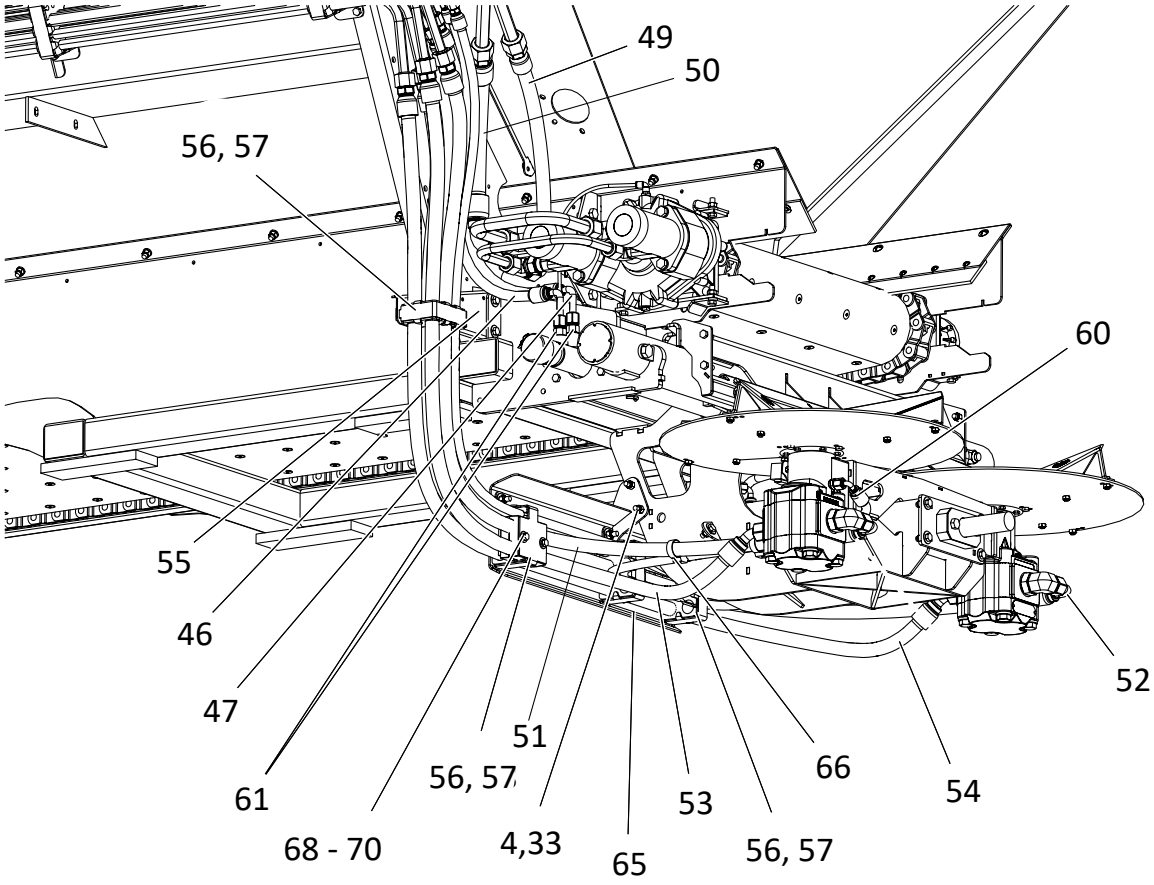

ITEM	PART NO.	DESCRIPTION	QTY
50	313542	Hose - Assy SAE 16 x 18-1/2 100R1	1
51	313532	Hose - Assy SAE 12 x 86-1/2 100R16	1
52	313535	Hose - Assy SAE 12 x 110 100R16	1
53	313531	Hose - Assy SAE 12 x 77-3/4 100R16	1
54	313534	Hose - Assy SAE 12 x 102-3/4 100R16	1
55	313397	Angle - Hose Clamp Mount 304	1
56	315720	Clamp Bar - Hose 304	3
57	315721	Clamp - Tubing Twin 1.10”	4
58	71830	Cap Screw - 5/16-18NC x 2-1/2 SS	1
59	75036	Clamp - Tubing Twin 3/4	1
60	313533	Hose - Assy SAE 6 x 65 100R1	1
61	313456	Fitting - 8-6 520120	2
62	313457	Fitting - 6-6-6 520432	1

Body Hydraulics

Main Bin Cont.

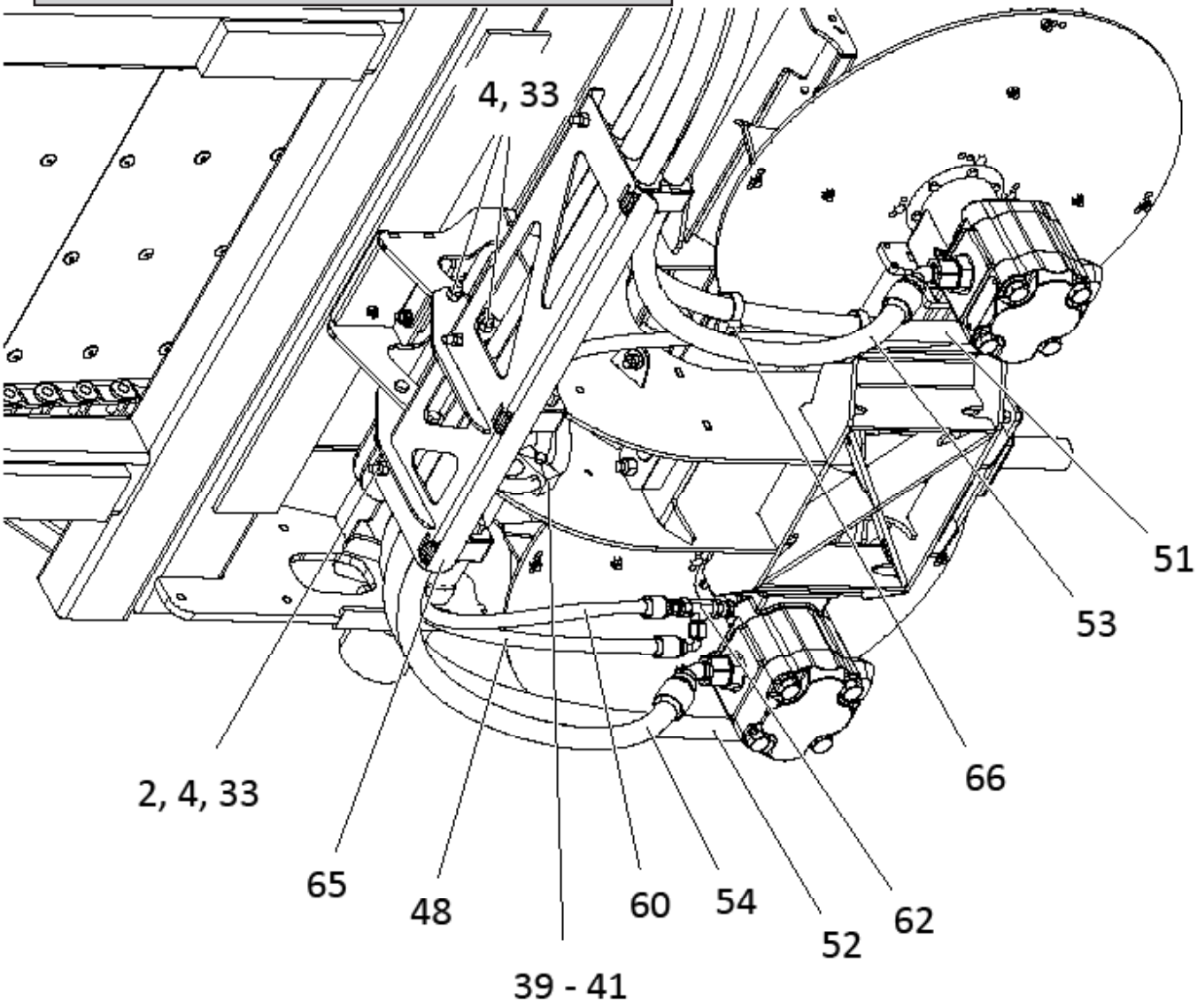

ITEM	PART NO.	DESCRIPTION	QTY
63	313465	Fitting - 6-4 520220	1
64	313464	Fitting - 6-4 520120	1
65	313400	Channel - Wldmt Hose Carrier	1
66	310648	Tie - Dual Clamp	4
67	307182-AA	Plug - 2 Pin Socket	2
68	314038	Plate - Weld 304	2
69	36424	Washer - Flat .313 SS	2
70	36419	Washer - Lock .313 SS	2

Body Hydraulics

Main Bin Cont.

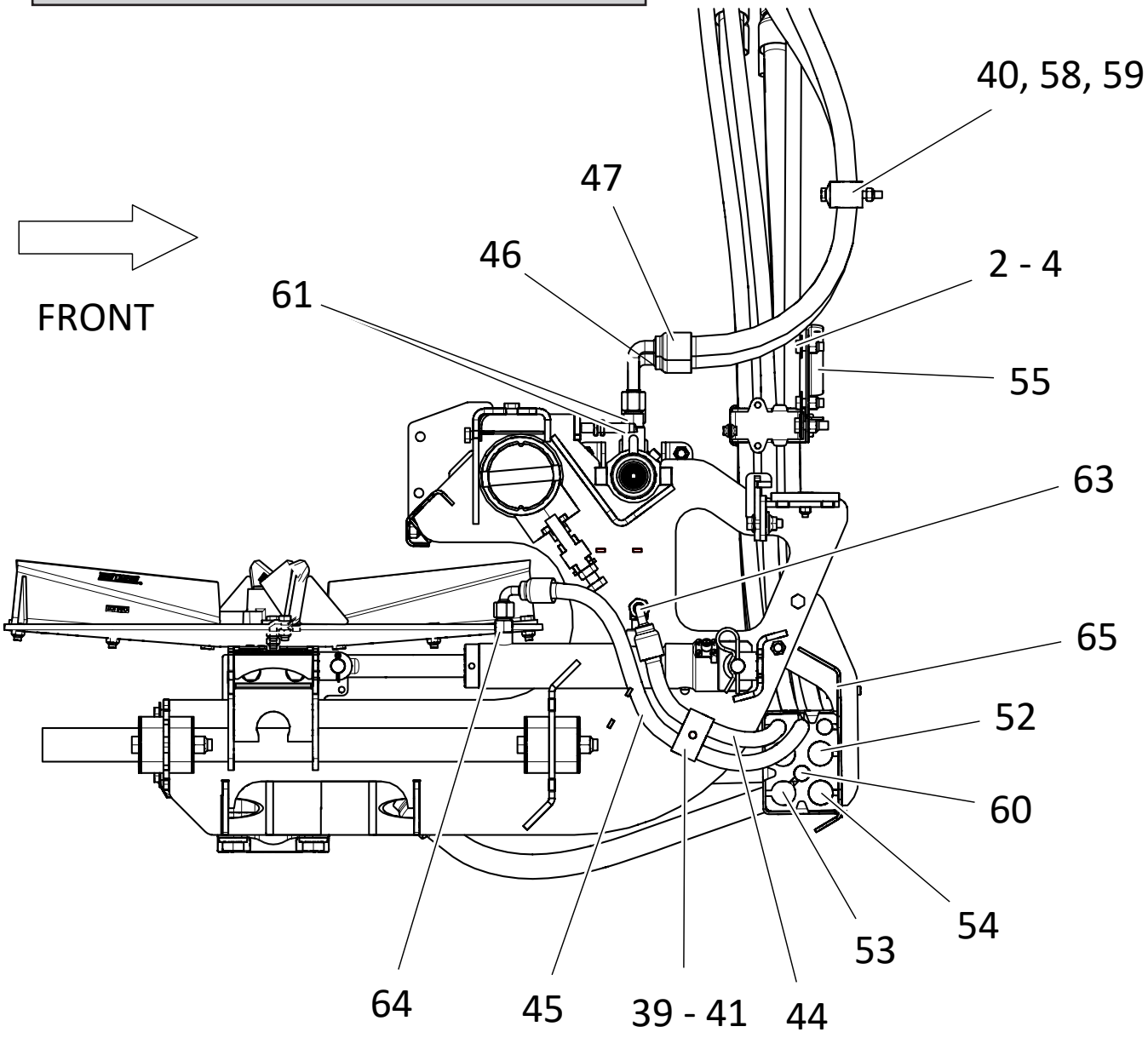

Body Hydraulics

Spreader Control Valve Assy

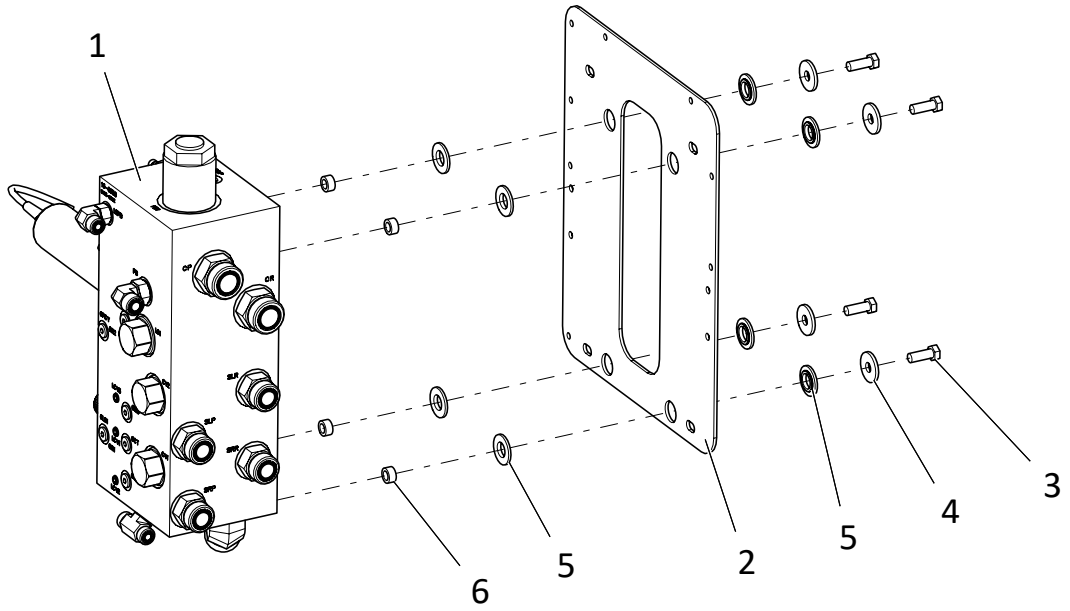

ITEM	PART NO.	DESCRIPTION	QTY
	313893	Valve - Mounting Assy 40 GPM	1
1	317363	Valve - Assy 40 GPM	1
2	313392	Plate - Valve Mount 304	1
3	36398	Cap Screw - 3/8-16NC x 1 SS	4
4	311798	Washer - Special	4
5	311664	Washer - Step Poly	8
6	88050	Spacer	4

Body Hydraulics

Spreader Control Valve Assy Cont.

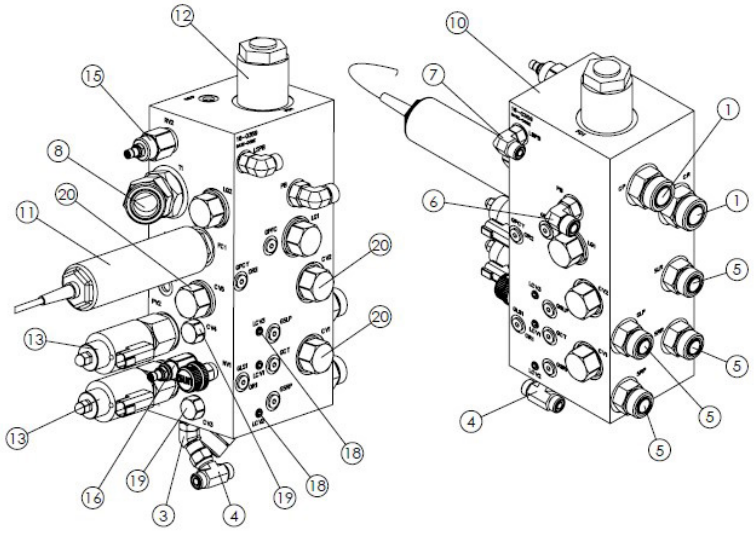

ITEM	PART NO.	DESCRIPTION	QTY
1	312655	Fitting - 16-16 520120	2
2	*313447	Fitting - 4-6 520120	1
3	313445	Fitting - 6-6 520320	1
4	313446	Fitting - 6-6-6 520433	1
5	313450	Fitting - 12-12 520120	4
6	313451	Fitting - 8-8 520220	1
7	313452	Fitting - 6-6 520220	1
8	313449	Fitting - 20-20 520320	1
9	*313448	Fitting - 16-16 520320	1
10	-	Block - Valve	1
11	306272	Valve - Flow Control 40gpm Sfp	1
12	311515-AA	Valve - Compensator 50gpm Sfp	1
13	317358	Valve - Pwm Flow Control 20gpm	2
14	*317359	Coil - Proportion 12 Vdc	2
15	311515-AD	Valve - Relief Soft Start	1
16	311515-AE	Valve - Relief	1
17	*311515-AF	Valve - Pressure Reducing	1
18	311515-AG	Valve - Check	2
19	311515-AH	Valve - Check	2
20	311515-AI	Valve - Check	3
* Not Shown			

Body Hydraulics

Cylinder Control Valve Assy

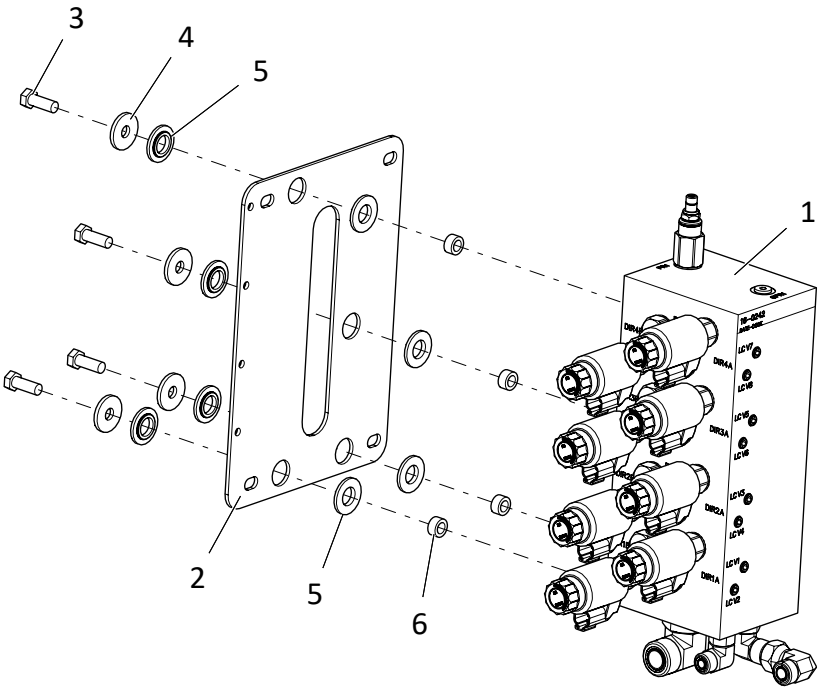

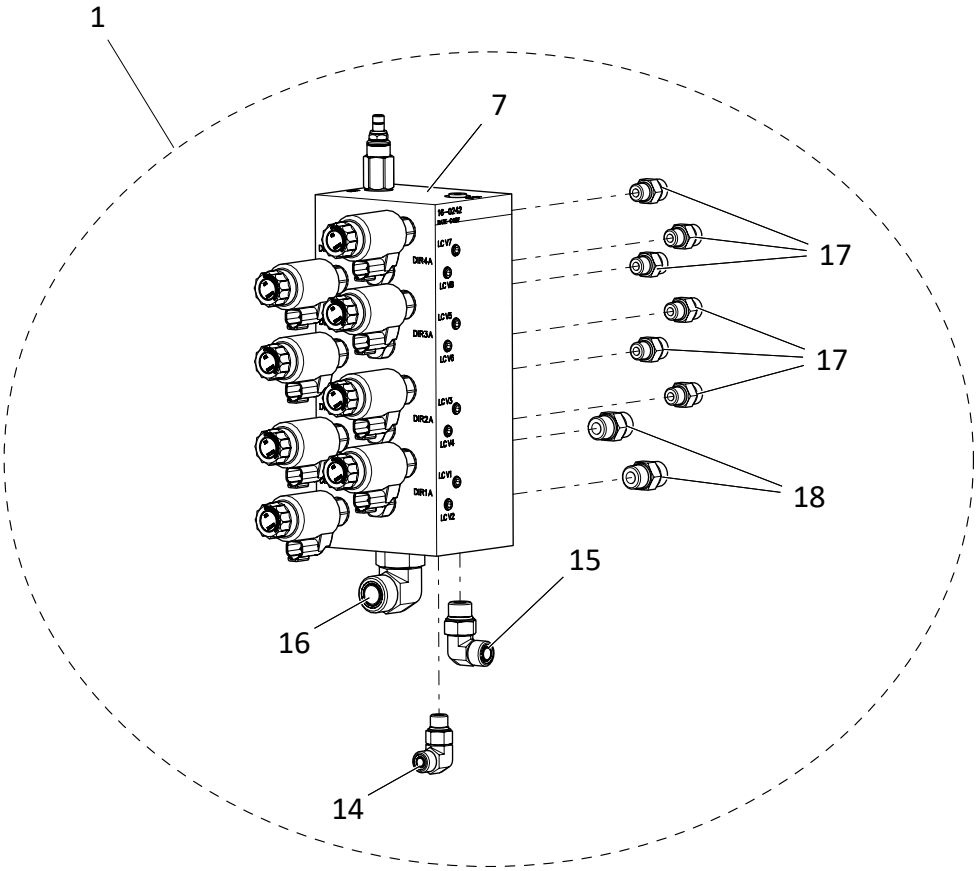

Body Hydraulics

Cylinder Control Valve Assy Cont.

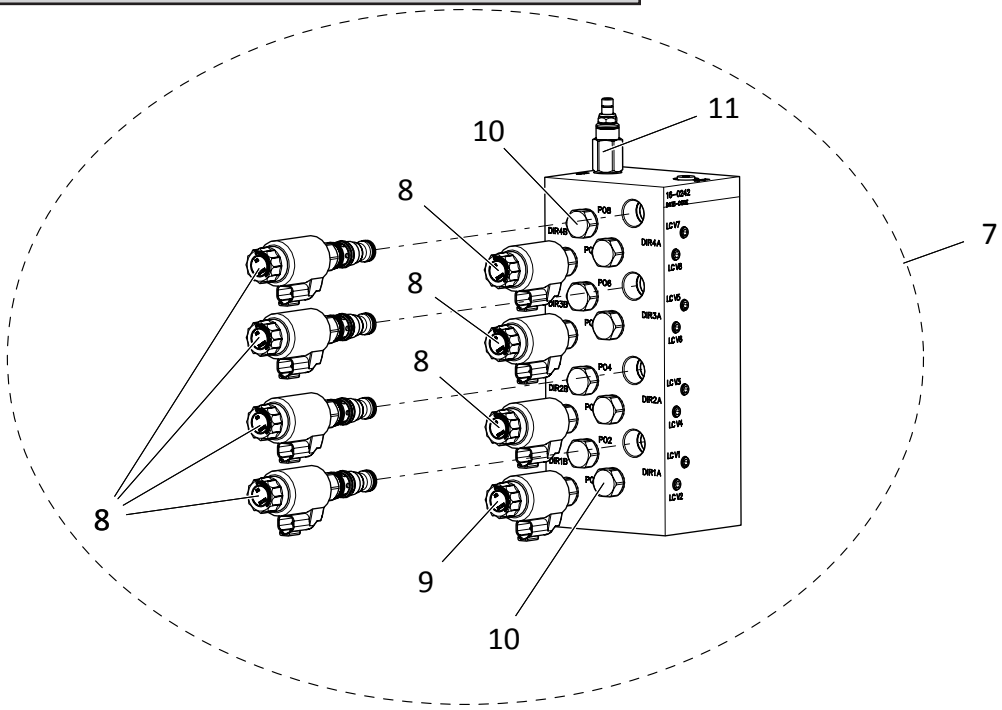

ITEM	PART NO.	DESCRIPTION	QTY
	313896	Valve - Mounting Assy, Includes Items 1 - 17	1
1	313895	Valve - Assy 40 GPM, Includes Items 7 - 17	1
2	313393	Plate - Valve Mount 304	1
3	36398	Cap Screw - 3/8-16NC x 1 SS	4
4	311798	Washer - Special	4
5	311664	Washer - Step Poly	8
6	88050	Spacer	4
7	313894	Valve - Cylinder Control, Includes Items 8 - 11	1
8	313894-AA	Valve - PWM Flow Control 6 GPM w/ Coil	7
9	313894-AB	Valve - PWM Flow Cotrol 9 GPM w/ Coil	1
10	313894-AC	Valve - Pilot Operated Check	8
11	313894-AD	Valve - Pressure Reducing / Relieving	1
12	313452	Fitting - 6-6 520220	1
13	313451	Fitting - 8-8 520220	1
14	304306	Fitting - 8-8 520221	1
15	313453	Fitting - 12-12 520220	1
16	313455	Fitting - 6-6 520120	6
17	313454	Fitting - 8-8 520120	2

Body Hydraulics

Hydraulic Reservoir w/ Cooler

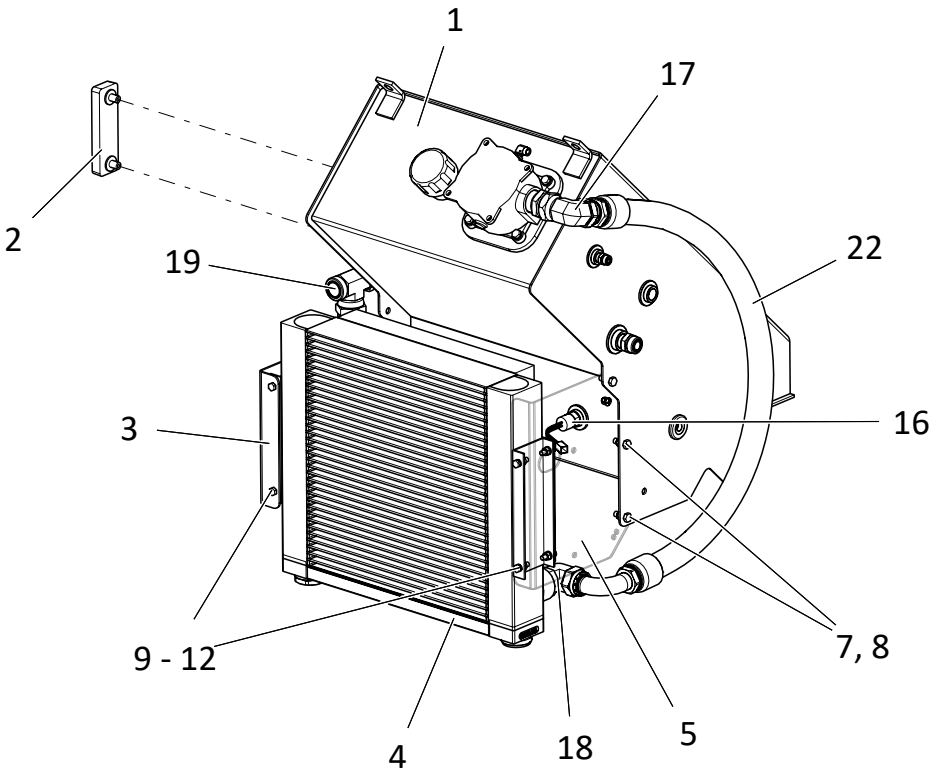

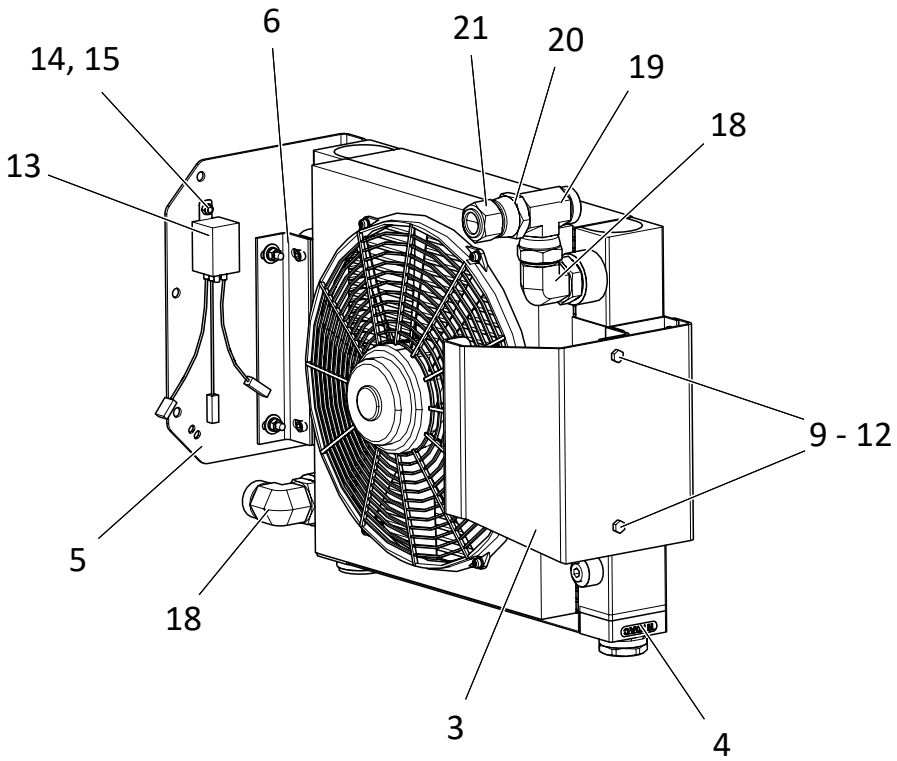

Body Hydraulics

Hydraulic Reservoir w/ Cooler

ITEM	PART NO.	DESCRIPTION	QTY
	315139	Tank - Assy Hyd 304 w/ Cooler, Includes Items 1 - 22	1
1	315140	Tank - Assy Hyd	1
2	38575	Gauge - Sight & Temperature	1
3	305761	Bracket - Cooler LH	1
4	305767	Cooler - Assy HYDAC	1
5	305760	Bracket - Cooler RH	1
6	306447	Bracket - Cooler Mount	2
7	36398	Cap Screw - 3/8-16NC x 1 SS	5
8	72054	Nut - Lock 3/8-16NC SS	5
9	34580	Cap Screw - 5/16-18NC x 1 SS	8
10	36424	Washer - Flat 5/16 SS	8
11	36429	Washer - Lock 5/16 SS	8
12	36413	Nut - Hex 5/16-18NC SS	8
13	312271	Relay - 12VDC 40A	1
14	56258	Screw - Truss Head 1/4-20NC x 1/2 SS	1
15	42034	Nut - Lock 1/4-20NC SS	1
16	305074	Switch - Temperature 114°	1
17	313406	Fitting - 20-20 520221	1
18	313416	Fitting - 20-20 520220	2
19	313417	Fitting - 20-20-20 520433	1
20	313418	Fitting - 20-16 520123	1
21	312674	Fitting - 16 520112	1
22	313419	Hose - Assy SAE 20 x 48 100R4	1

Body Hydraulics

Hydraulic Reservoir

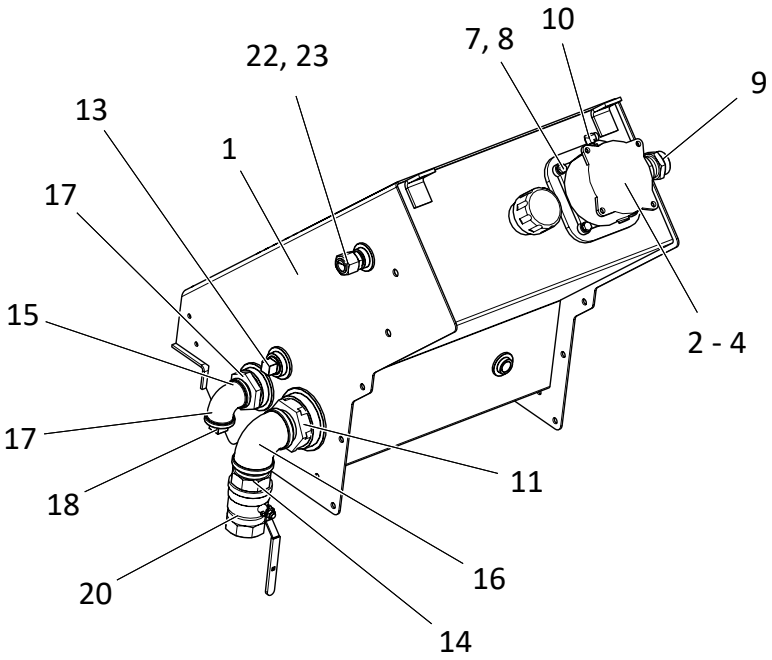

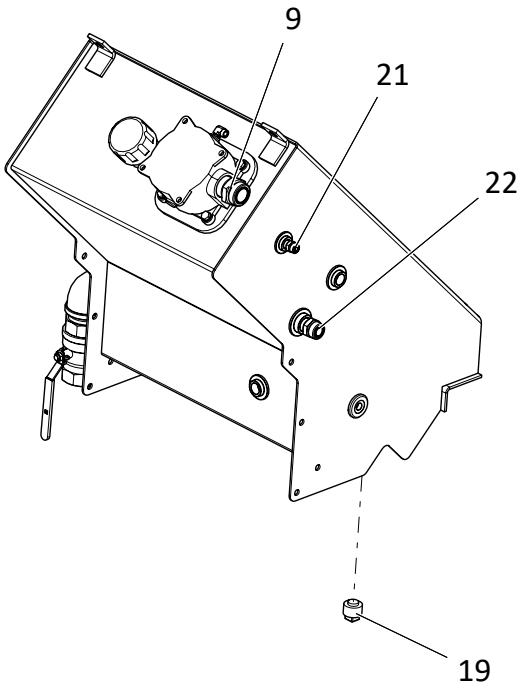

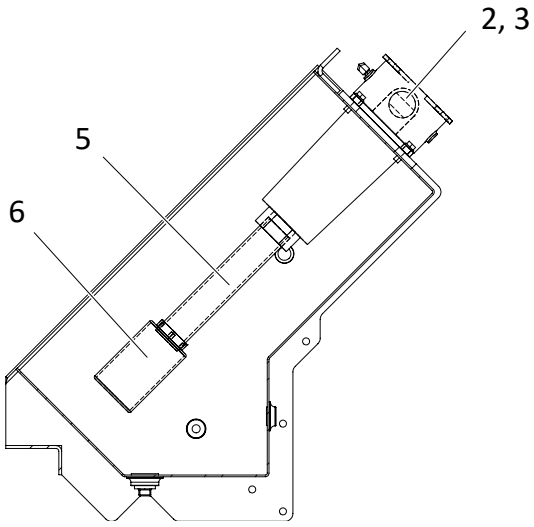

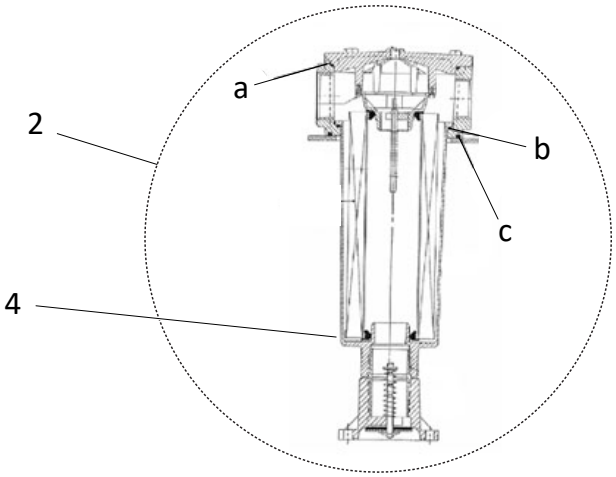

Body Hydraulics

Hydraulic Reservoir Cont.

ITEM	PART NO.	DESCRIPTION	QTY
	315140	Tank - Assy Hyd 304, Includes Items 1 - 23	1
1	315141	Tank - Wldmt Hydraulic 304	1
2	88838	Filter - Return, In Tank	1
a	306772	O-Ring - Cover Filter	1
b	306773	O-Ring - Housing Filter	1
c	306789	Seal - Filter Assy	1
3	306186	Gasket Maker - Silicone RTV	AR
4	305066	Filter - Element	1
5	305058	Pipe - 1-1/2 SCH40 x 10	1
6	305057	Diffuser - In Tank	1
7	20068	Cap Screw - 3/8-16NC x 1-1/4	4
8	20712	Washer - Lock 3/8	4
9	313403	Fitting - 20-20 Non-Standard	1
10	311214	Fitting - 2-2 140239C	1
11	305063	Strainer - 2 NPT	1
12	305062	Strainer - 1-1/4 NPT	1
13	6034	Plug - Pipe 1 NPT	1
14	22324	Nipple - Close 2 NPT	2
15	6028	Nipple - Close 2 NPT	1
16	23703	Adapter - Elbow 90° 1-1/4 NPT	1
17	6011	Elbow - 90° 1-1/4 NPT	1
18	6035	Plug - Pipe 1-1/4 NPT	1
19	305061	Plug - Magnetic 1 NPT	1
20	305060	Valve - Ball 2 NPT	1
21	313405	Fitting - 6-6 Non-Standard	1
22	313404	Fitting - 12-12 Non-Standard	2
23	312673	Fitting - 12 520112	1

Body Hydraulics

Left Hand Hydraulics - Insert

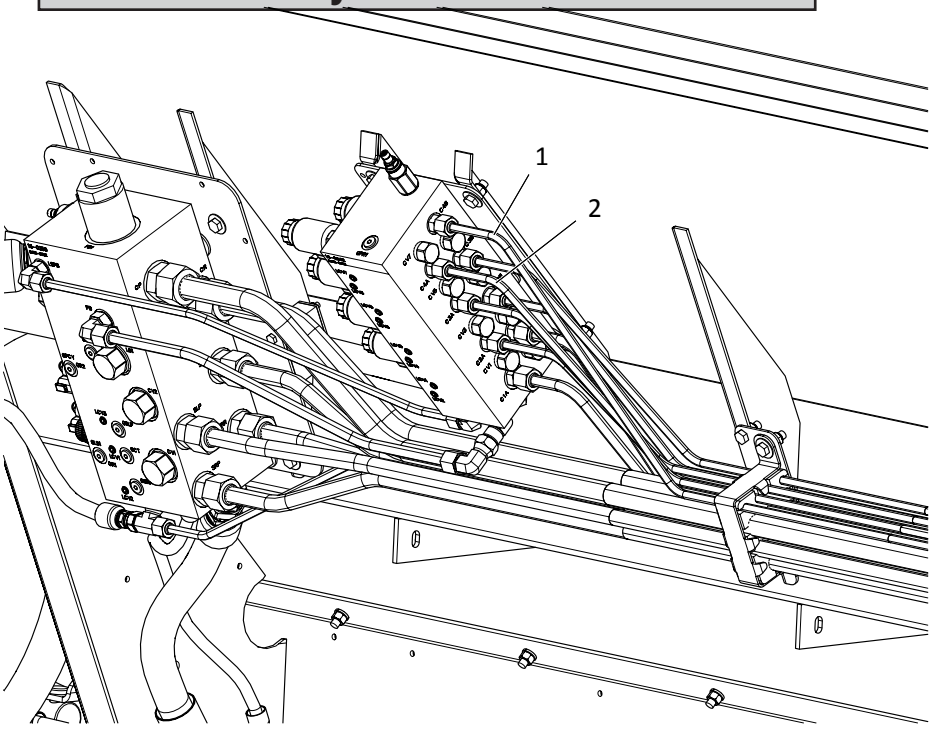

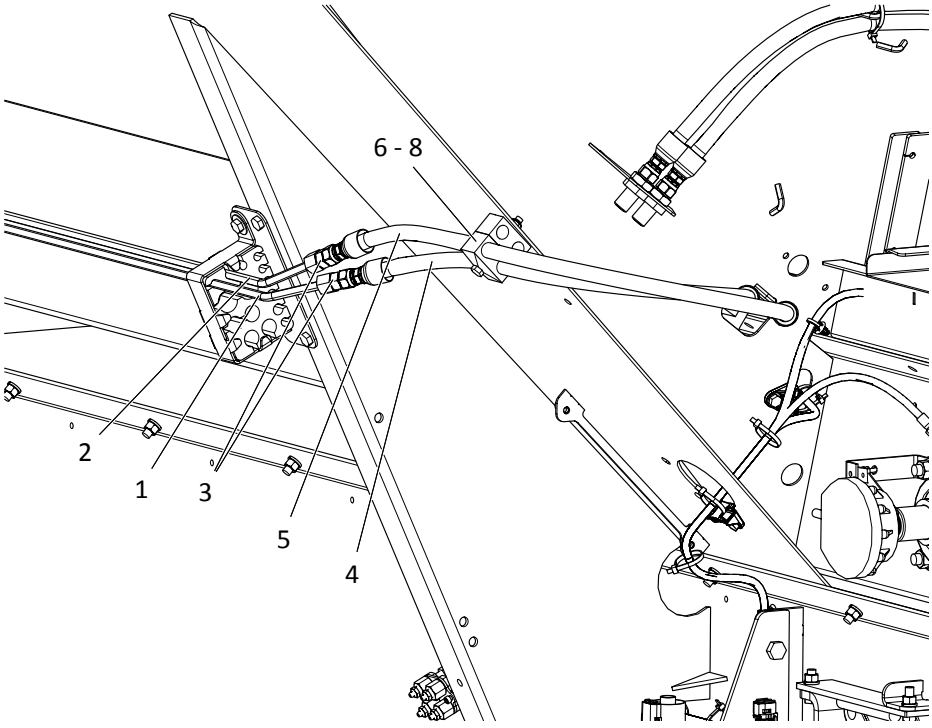

Body Hydraulics

Left Hand Hydraulics - Insert Cont.

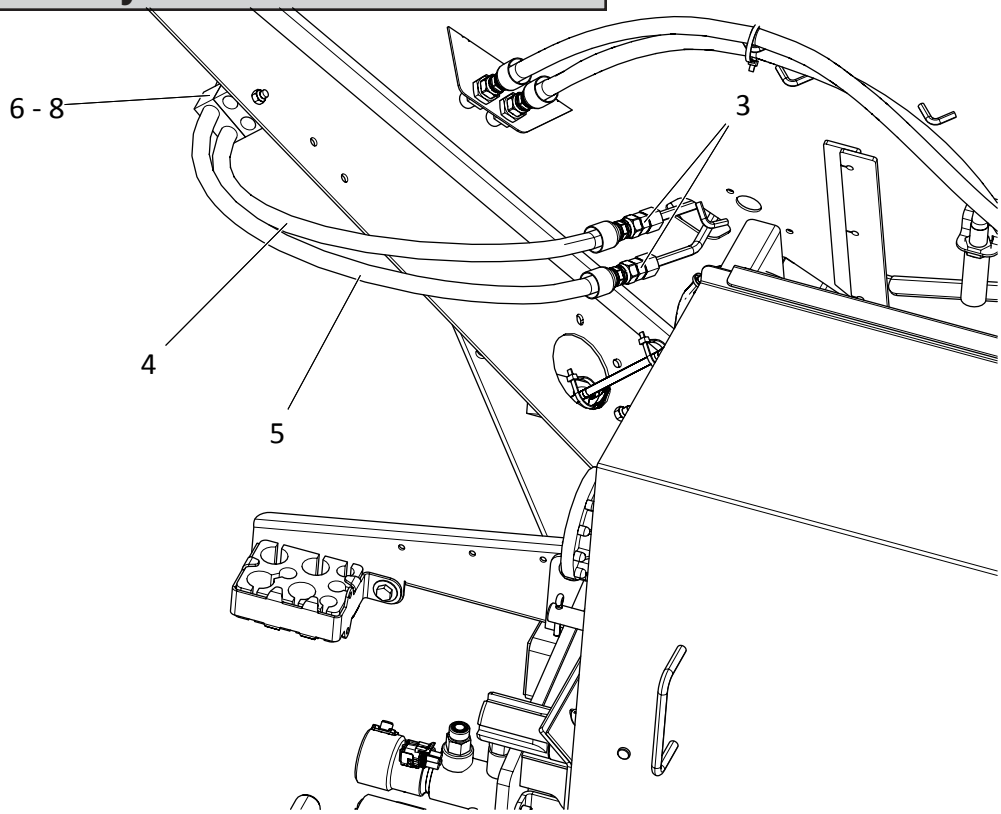

ITEM	PART NO.	DESCRIPTION	QTY
1	314388 313335	Tube - Assy 3/8 x .035 304, 13' Unit Tube - Assy 3/8 x .035 304, 14' Unit	1 1
2	314389 313336	Tube - Assy 3/8 x .035 304, 13' Unit Tube - Assy 3/8 x .035 304, 14' Unit	1 1
3	313487	Fitting - 6-6 520101S 304	4
4	313548	Hose - Assy SAE 6 x 32-1/2 100R1 SS	1
5	313658	Hose - Assy SAE 6 x 28-1/2 100R1 SS	1
6	96258	Cap Screw - 5/16-18NC x 3 SS	1
7	42221	Nut - Lock 5/16-18NC SS	1
8	305410	Clamp - Tubing Twin 5/8	1

NOTE: The following parts are required to convert a single bin unit to MultApplier or MultiBin ready. See previous pages for details on main bin hydraulics.

Body Hydraulics

MultApplier

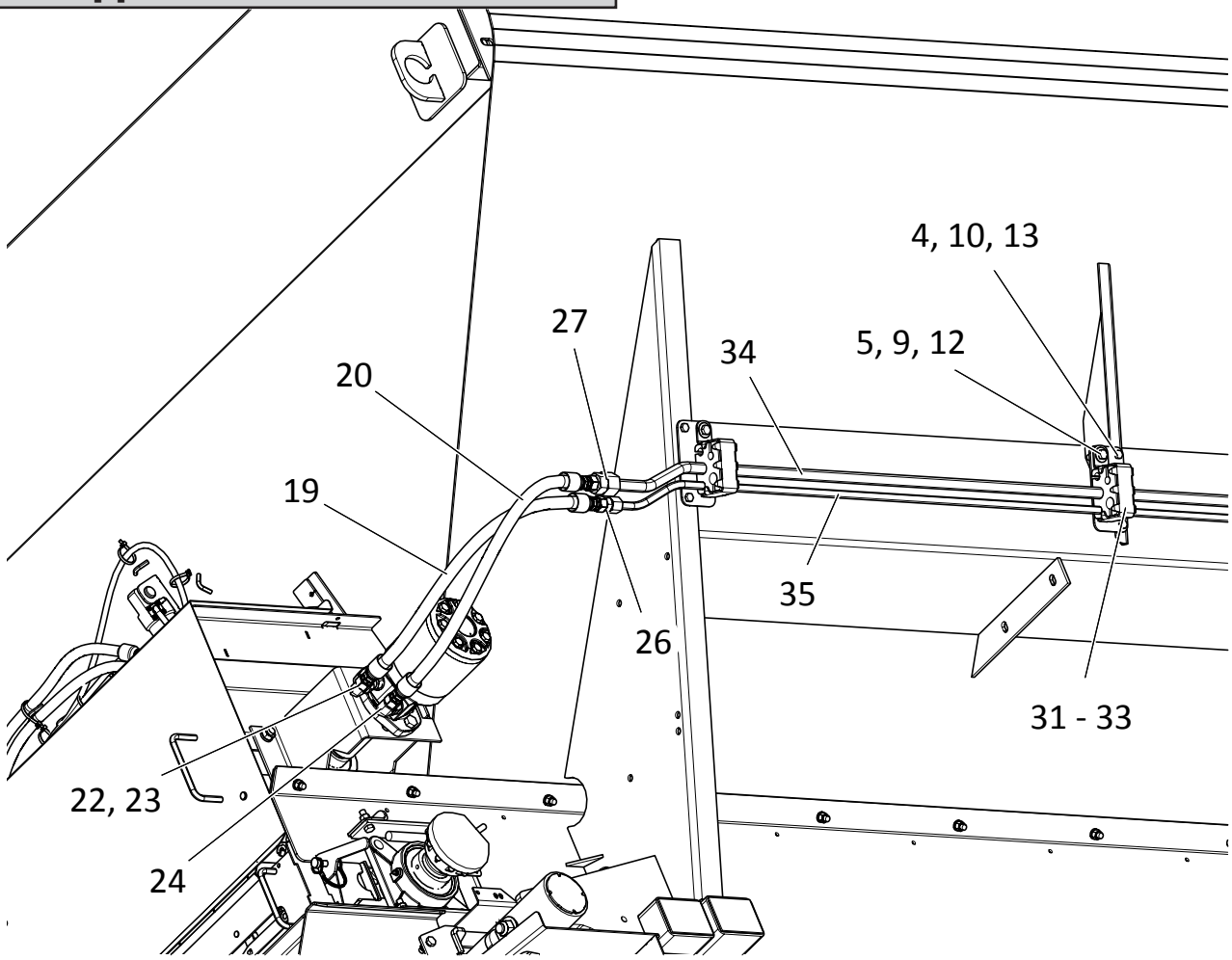

ITEM	PART NO.	DESCRIPTION	QTY
1	313388	Bracket - Valve Mtg SFP	1
2	313898	Valve - Assy 10 GPM SFP w/ Relief	1
3	313994	Plate - Hose Mount 304	1
4	34580	Cap Screw - 5/16-18NC x 1 SS	8
5	36399	Cap Screw - 3/8-16NC x 1-1/4 SS	4
6	56396	Cap Screw - 1/4-20NC x 3-1/4 SS	2
7	36398	Cap Screw - 3/8-16NC x 1 SS	6
8	36396	Cap Screw - 1/4-20NC x 3 SS	10
9	36425	Washer - Flat 3/8 SS	8
10	36424	Washer - Flat 5/16 SS	8
11	36423	Washer - Flat 1/4 SS	4
12	72054	Nut - Lock 3/8-16NC SS	10

Body Hydraulics

MultApplier Cont.

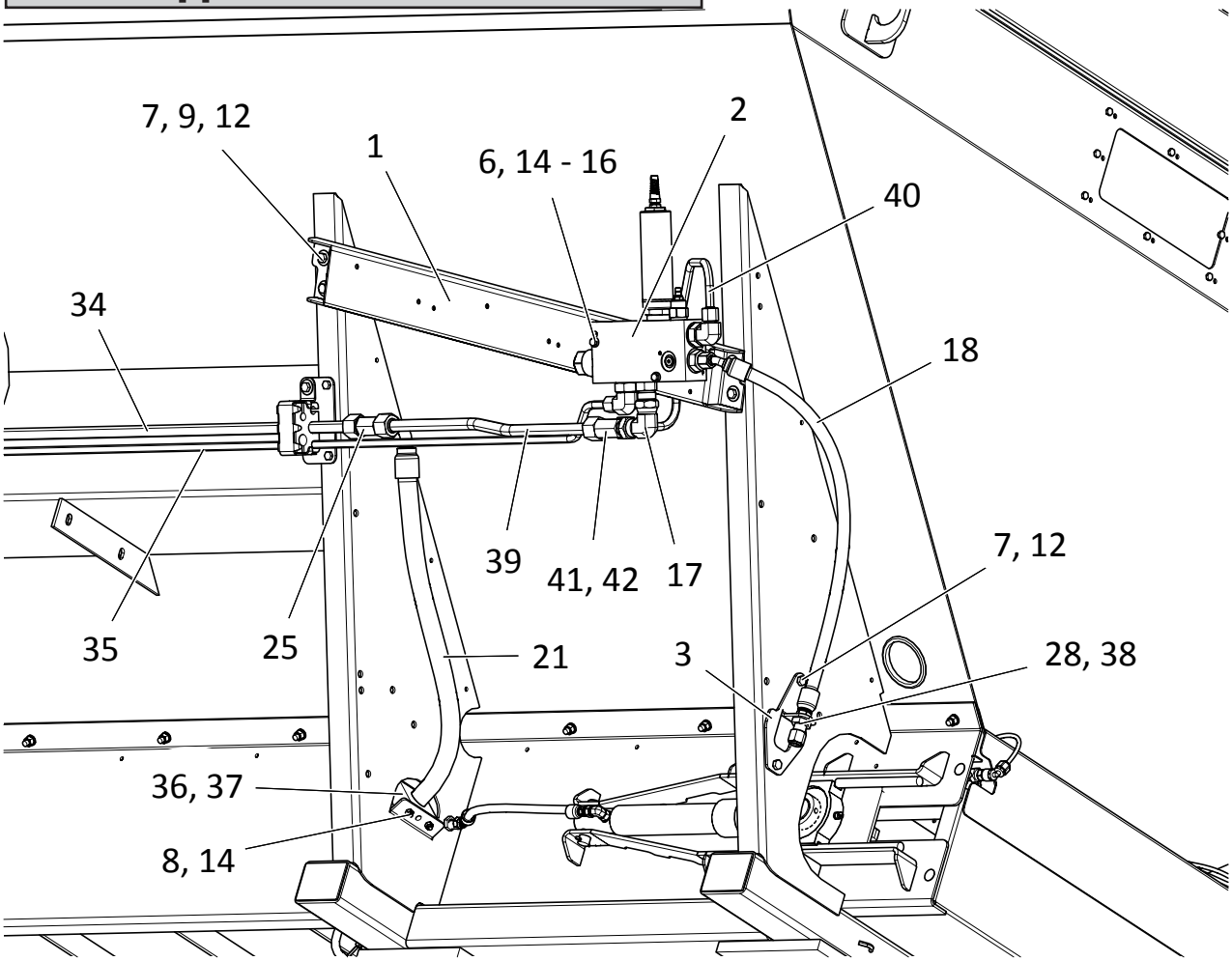

ITEM	PART NO.	DESCRIPTION	QTY
13	42221	Nut - Lock 5/16-18NC SS	8
14	42034	Nut - Lock 1/4-20NC SS	12
15	302098	Washer - Step 1/2 Thick	2
16	302097	Washer - Step 1/8 Thick	2
17	313473	Fitting - 12-12 520221	1
18	313579	Hose - Assy SAE 8 x 29-1/2 100R1	1
19	313578	Hose - Assy SAE 8 x 25-1/2 100R1 SS	1
20	313659	Hose - Assy SAE 8 x 24 100R1 SS	1
21	313660	Hose - Assy SAE 12 x 132 100R4	1
22	313481	Fitting - 8-8 520221S 304	1
23	313480	Fitting - 8-10 520120S 304	1

Body Hydraulics

MultApplier Cont.

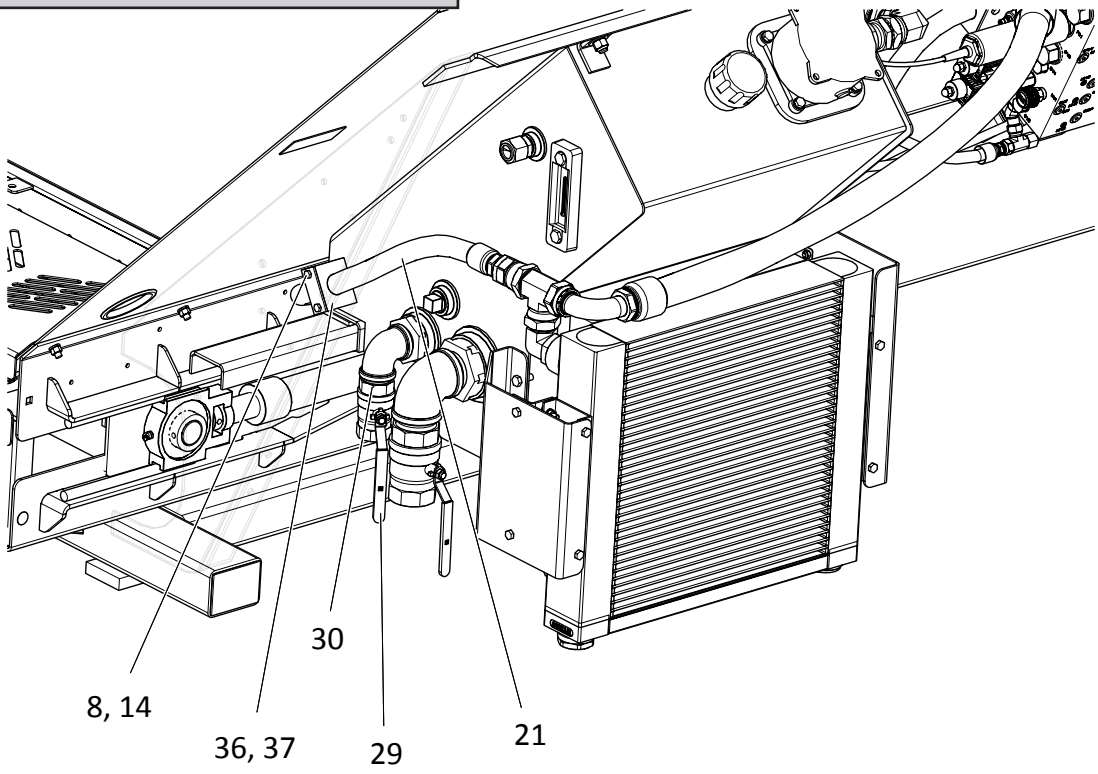

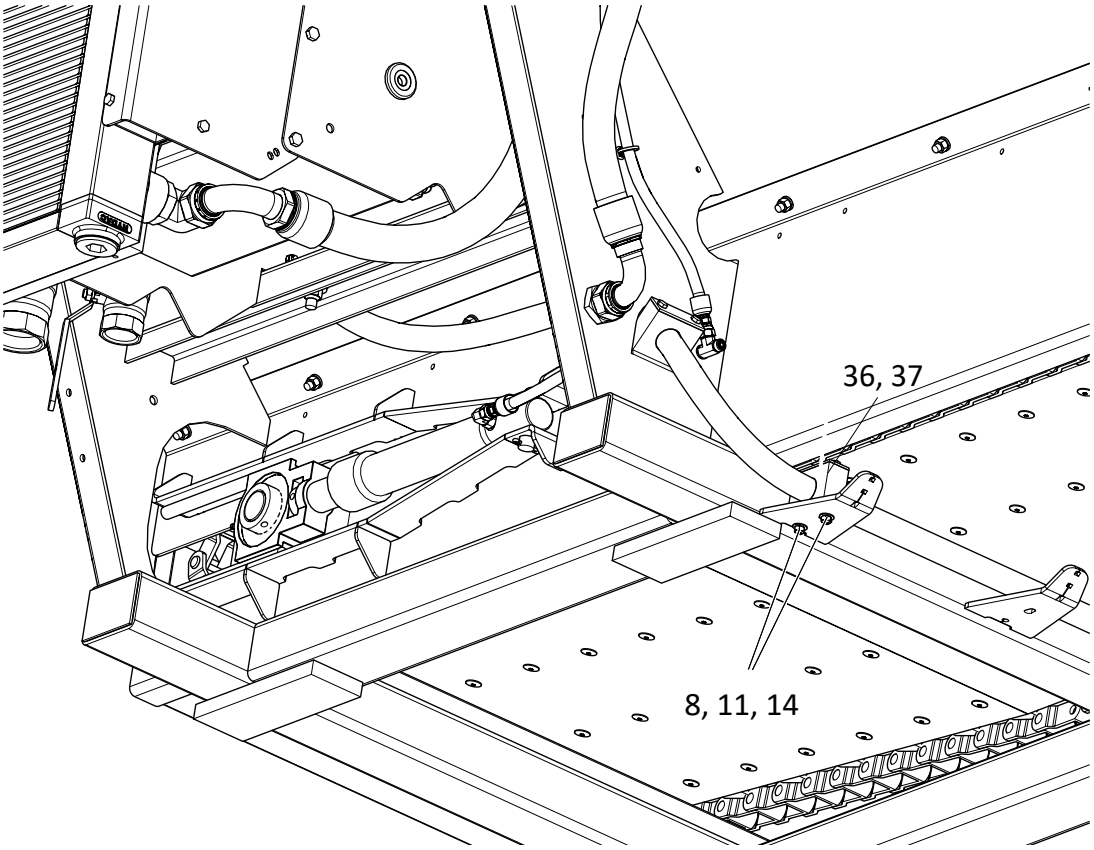

Body Hydraulics

MultApplier Cont.

ITEM	PART NO.	DESCRIPTION	QTY
24	313479	Fitting - 8-10 520220S 304	1
25	313476	Fitting - 12-12-12 520401	1
26	313477	Fitting - 8-8 520101S 304	1
27	313478	Fitting - 12-8 520101S 304	1
28	313470	Fitting - 8 520112	1
29	305059	Valve - Ball 1-1/4 NPT	1
30	6028	Nipple - Close 1-1/4 NPT	1
31	313389	Plate - Brkt Tube Clamp Mtg 304	4
32	313390	Clamp - Bar Tube 304	4
33	313391	Clamp - Rubber Insert	4
34	314394 313339	Tube - Assy 3/4 x .049 304, 13' Unit Tube - Assy 3/4 x .049 304, 14' Unit	1 1
35	314393 313338	Tube - Assy 1/2 x .049 304, 13' Unit Tube - Assy 1/2 x .049 304, 14' Unit	1 1
36	96926	Clamp Pair - 1-1/4 Tube	5
37	96925	Plate - Top 1-1/4 Tube	5
38	313469	Fitting - 8 520118	1
39	313340	Tube - Assy 3/4 304	1
40	313341	Tube - Assy 1/2 304	1
41	313474	Fitting - 12-12-12 520432	1
42	313475	Fitting - 12-8 520123A	1

Body Hydraulics

MultiBin, Single Micro

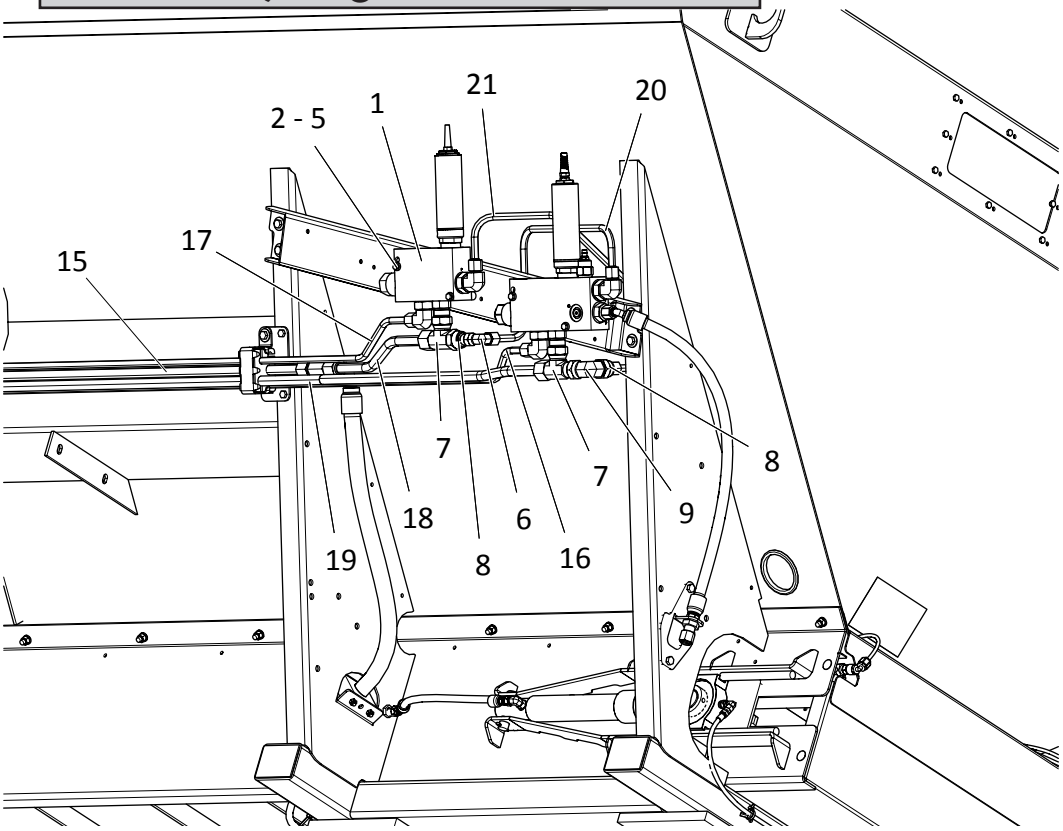

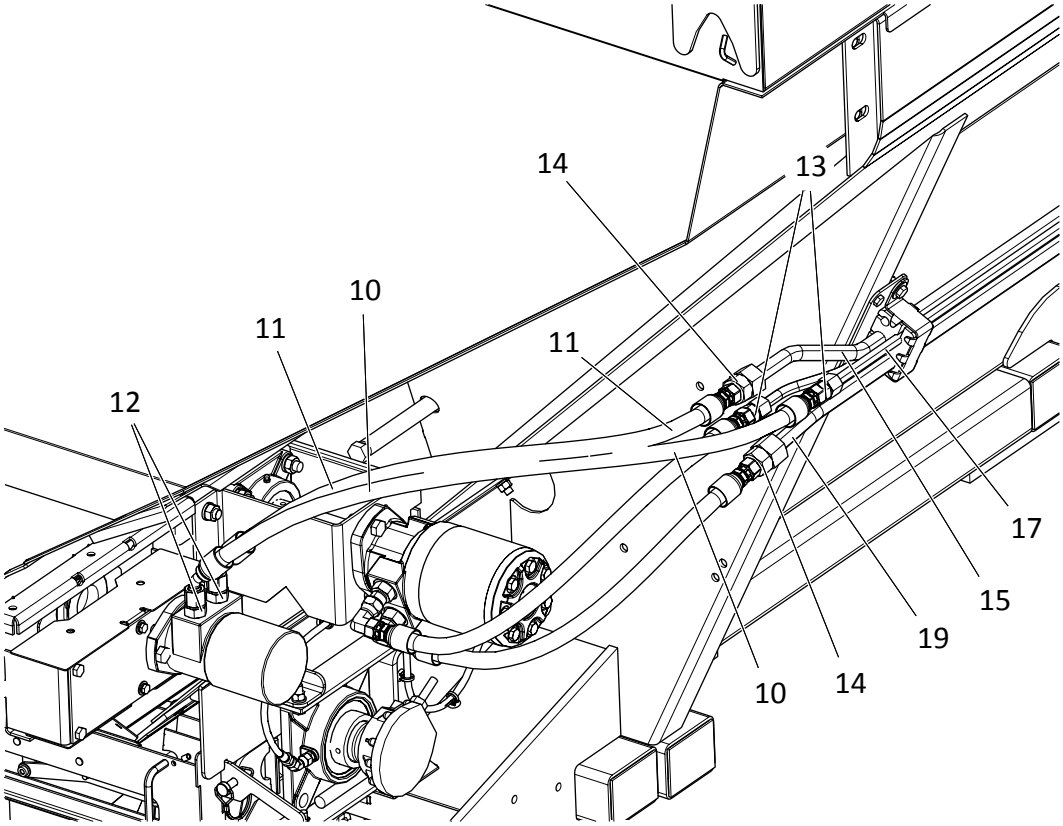

Body Hydraulics

MultiBin, Single Micro Cont.

ITEM	PART NO.	DESCRIPTION	QTY
1	313899	Valve - Assy 5 GPM SFP w/ Relief	1
2	56396	Cap Screw - 1/4-20NC x 3-1/4 SS	4
3	42034	Nut - Lock 1/4-20NC SS	14
4	302098	Washer - Step 1/2 Thick	4
5	302097	Washer - Step 1/8 Thick	4
6	304306	Fitting - 8-8 520221	1
7	313462	Fitting - 12-12-12 520433	2
8	313475	Fitting - 12-8 520123A	2
9	313473	Fitting - 12-12 520221	1
10	313576	Hose - Assy SAE 8 x 33-1/2 100R1 SS	1
11	313577	Hose - Assy SAE 8 x 30-1/2 100R1 SS	1
12	313480	Fitting - 8-10 520120 304	3
13	313477	Fitting - 8-8 520120 304	2
14	313478	Fitting - 12-8 520101 304	1
15	314394 313339	Tube - Assy 3/4 x .049 304, 13' Unit Tube - Assy 3/4 x .049 304, 14' Unit	1 1
16	313338	Tube - Assy 1/2 x .049 304	1
17	314395 313342	Tube - Assy 1/2 x .049 304, 13' Unit Tube - Assy 1/2 x .049 304, 14' Unit	1 1
18	313344	Tube - Assy 3/4 x .049 304	1
19	314396 313345	Tube - Assy 3/4 x .065 304, 13' Unit Tube - Assy 3/4 x .065 304, 14' Unit	1 1
20	313346	Tube - Assy 1/2 x .049 304	1
21	313347	Tube - Assy 1/2 x .049 304	1

NOTE: Refer to previous pages for full listing of Bin 2 hydraulic components.

Body Hydraulics

MultiBin, Dual Micro

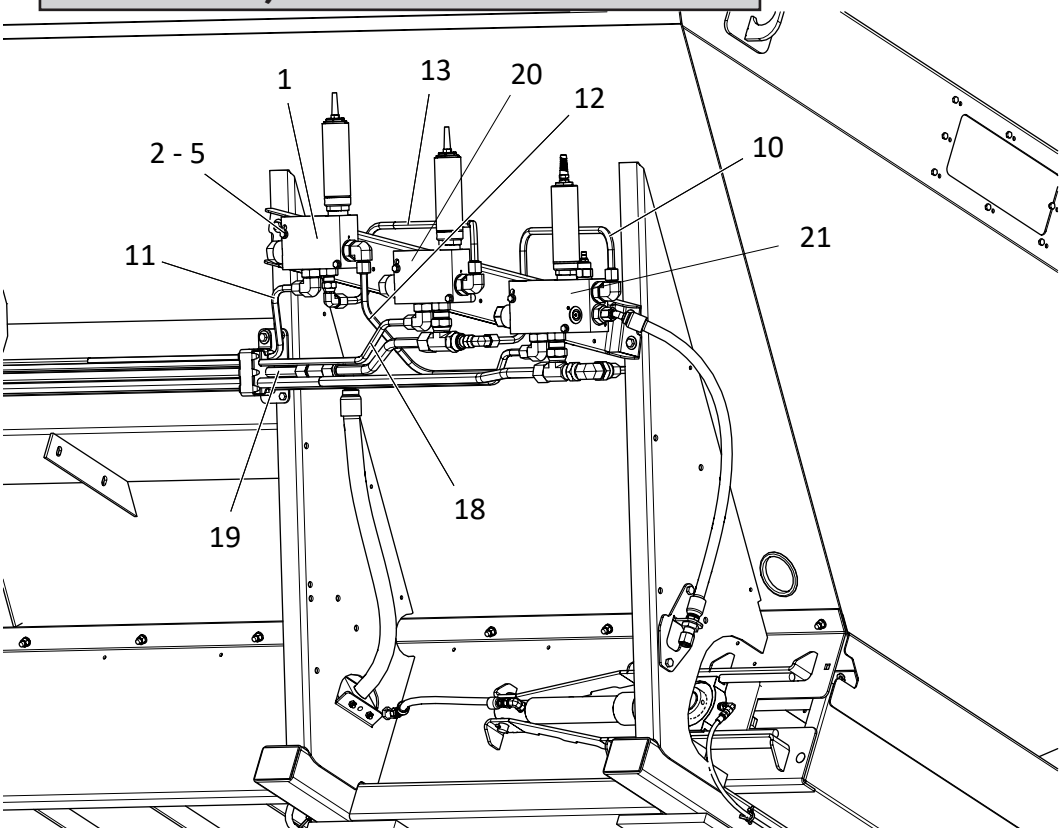

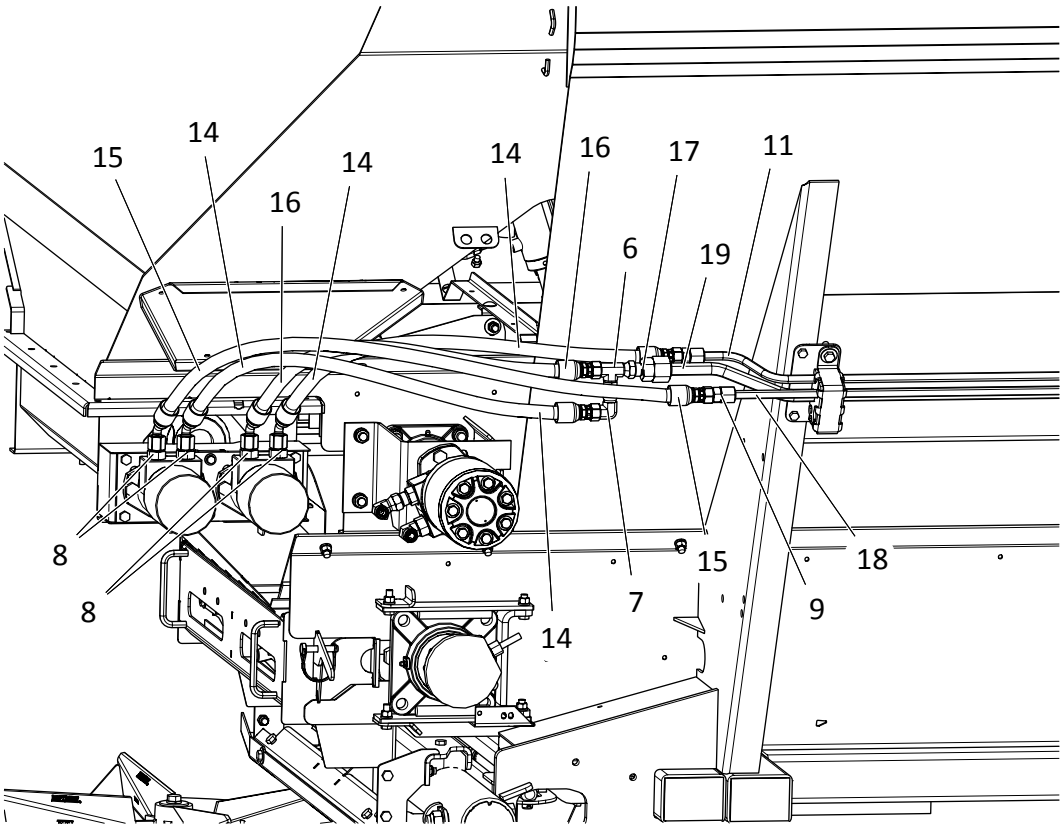

Body Hydraulics

MultiBin, Dual Micro

ITEM	PART NO.	DESCRIPTION	QTY
1	313900	Valve - Assy 5 GPM SFP w/ Relief	1
2	56396	Cap Screw - 1/4-20NC x 3-1/4 SS	6
3	42034	Nut - Lock 1/4-20NC SS	16
4	302098	Washer - Step 1/2 Thick	6
5	302097	Washer - Step 1/8 Thick	6
6	313484	Fitting - 8-8-8 520432 304	1
7	313481	Fitting - 8-8 520221 304	1
8	313480	Fitting - 8-10 520120 304	4
9	313477	Fitting - 8-8 520101 304	3
10	313346	Tube - Assy 1/2 x .049 304	1
11	314397 313348	Tube - Assy 1/2 x .049 304, 13' Unit Tube - Assy 1/2 x .049 304, 14' Unit	1 1
12	313349	Tube - Assy 1/2 x .049 304	1
13	313350	Tube - Assy 1/2 x .049 304	1
14	313576	Hose - Assy SAE 8 x 33-1/2 100R1 SS	2
15	313547	Hose - Assy SAE 8 x 44-1/2 100R1 SS	1
16	313577	Hose - Assy SAE 8 x 30-1/2 100R1 SS	1
17	313478	Fitting - 12-8 520101 304	1
18	314395 313342	Tube - Assy 1/2 x .049 304, 13' Unit Tube - Assy 1/2 x .049 304, 14' Unit	1 1
19	314394 313339	Tube - Assy 3/4 x .049 304, 13' Unit Tube - Assy 3/4 x .049 304, 14' Unit	1 1

NOTE: Refer to previous pages for full listing of Bins 2 & 3 hydraulic components.

#4 Belt-Over-Chain Conveyor

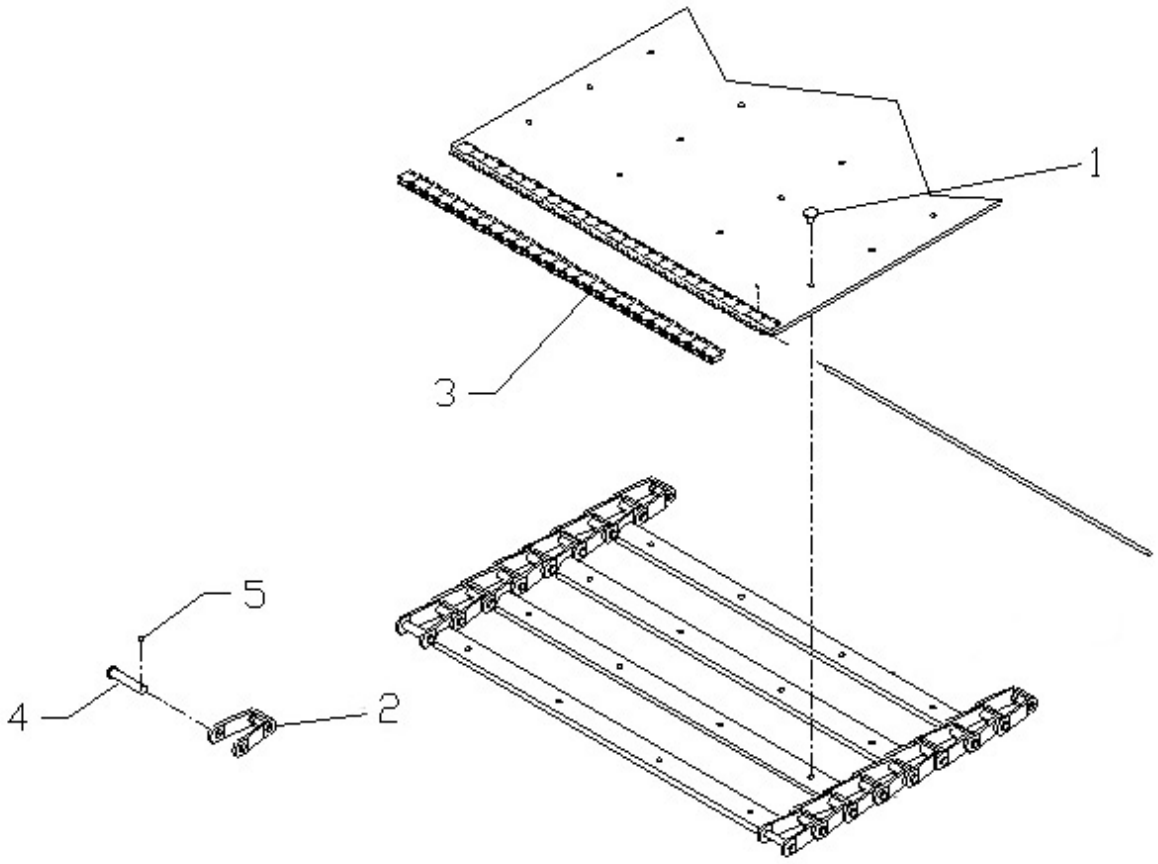

ITEM	PART NO.	DESCRIPTION	QTY
	311465-AB 311465-AC	Belt-Over-Chain - #4 13' MOR Belt-Over-Chain - #4 14' MOR	1 1
1	305646	Screw - #4BOC 1/4 x 9/16 torx Flat Head	AR
2	310295	Crossbar - Wldmt w/ Links, Includes Items 4 & 5	AR
3	73317	Kit – Splicer	1
4	36697	Pin – Pintle Chain	AR
5	20817	Pin – Cotter	AR
6	36699	Link – Pintle Chain	AR

Conveyor
Chain Shields

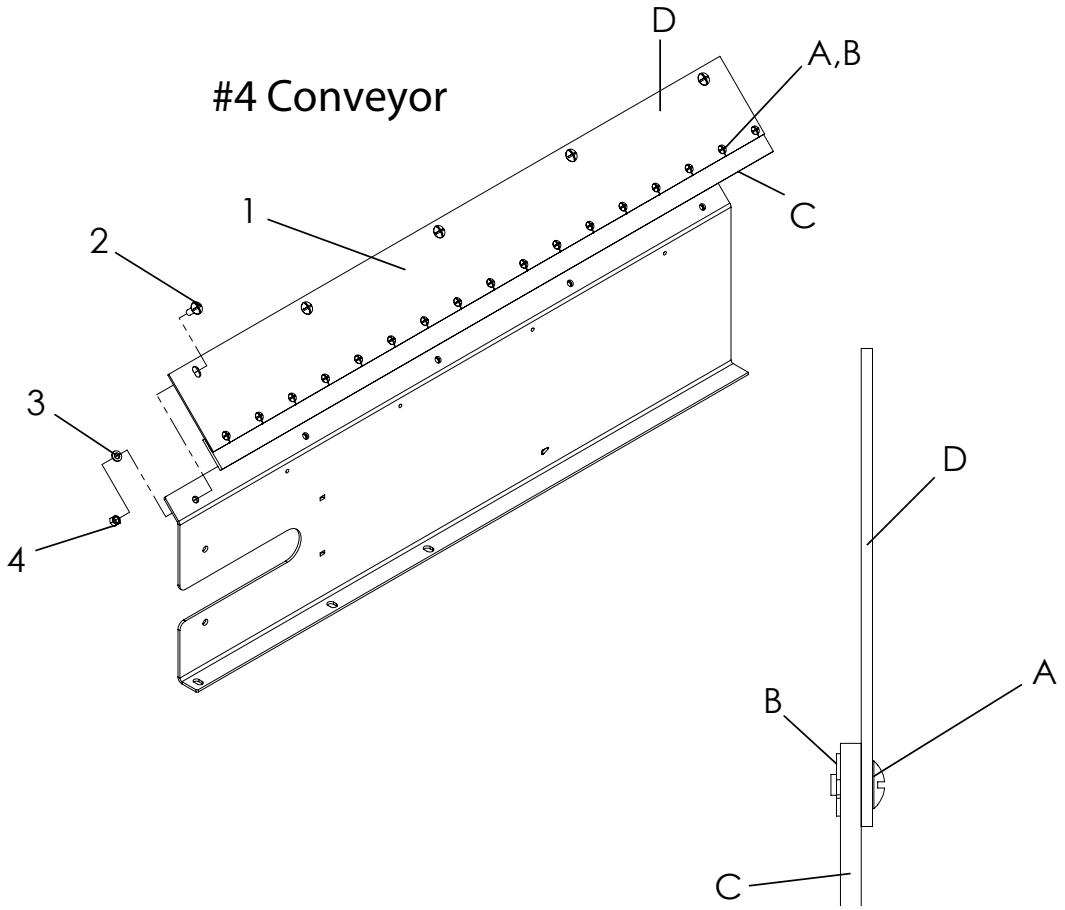

ITEM	PART NO.	DESCRIPTION	QTY 13'	QTY 14'
1	314433 313234	Chain Shield – #4 Chain 13', Includes A - C Chain Shield – #4 Chain 14', Includes A - C	2 --	-- 2
A	56258	Screw – Truss Head 1/4-20NC x 1/2 SS	56	60
B	88931	Nut – Tee 1/4 x 1/4	56	60
C	313235	Sealer - Belt, #4 BOC Shield	AR	AR
2	71829	Screw - Truss Head 3/8-16NC x 1 SS	30	32
3	36420	Washer – Lock 3/8-16NC SS	30	32
4	36414	Nut – Hex 3/8-16NC SS	30	32

AR - As Required

Conveyor

Conveyor Idler

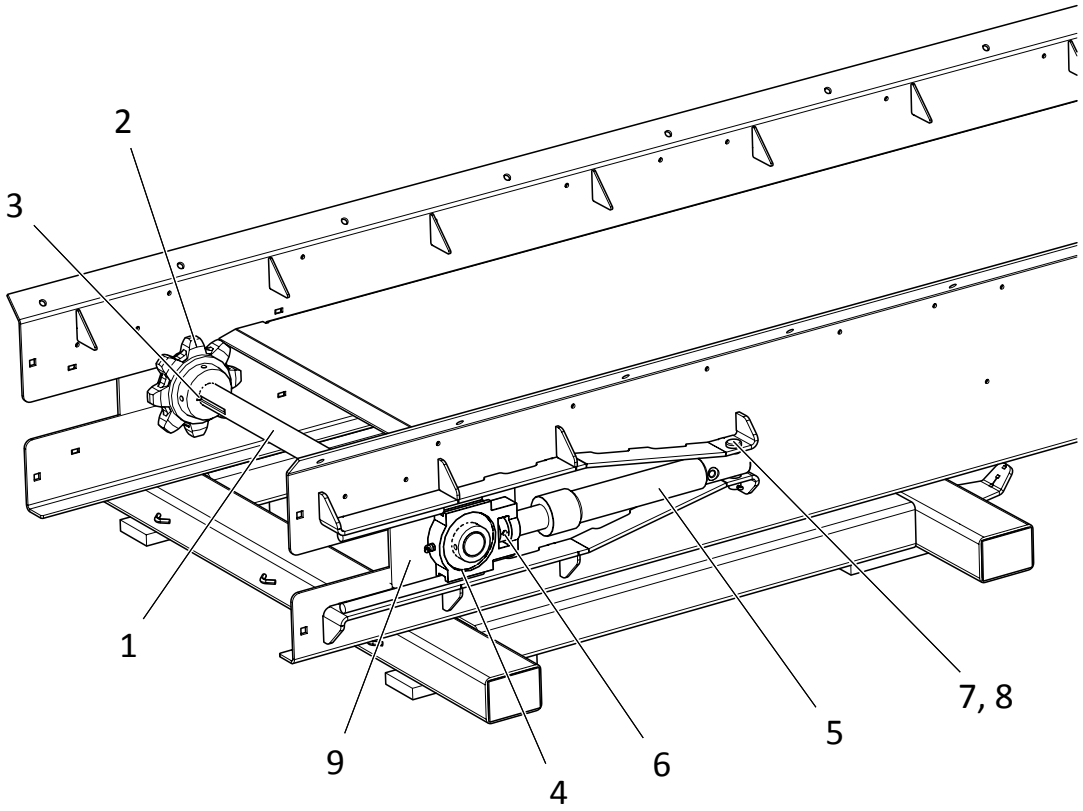

ITEM	PART NO.	DESCRIPTION	QTY
	97053	Shaft - Idler Assembly, Includes Items 1 - 4	1
1	82799	Shaft – Idler	1
2	97051	Sprocket – Idler	2
3	2135	Key – Square 5/16 x 2-1/2	2
4	22511	Bearing – Take-up	2
5	311359	Cylinder - Ram 1-1/2 x 8"	2
	312938	Kit - Seal, Snap-in Rod Wiper	1
	312939	Kit - Seal, Press-in Rod Wiper	1
6	2696	Collar – Set 1"	2
7	89630	Pin - Clevis 3/4 x 2-3/4	2
8	20822	Pin - Cotter	2
9	311670	Plate - Cover	2

Conveyor

Conveyor Drive

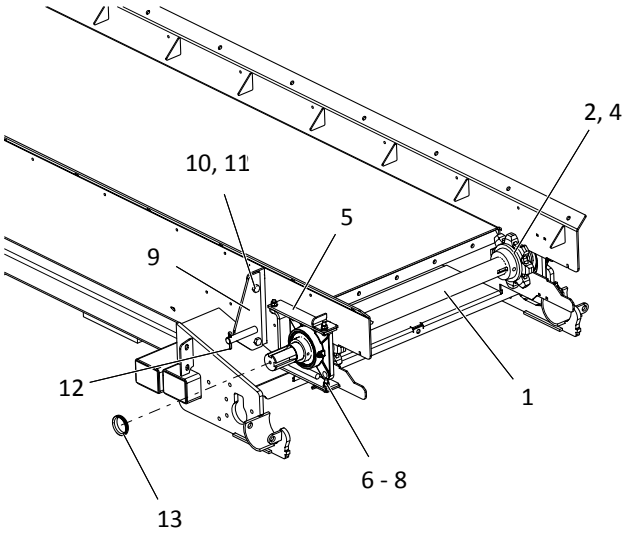

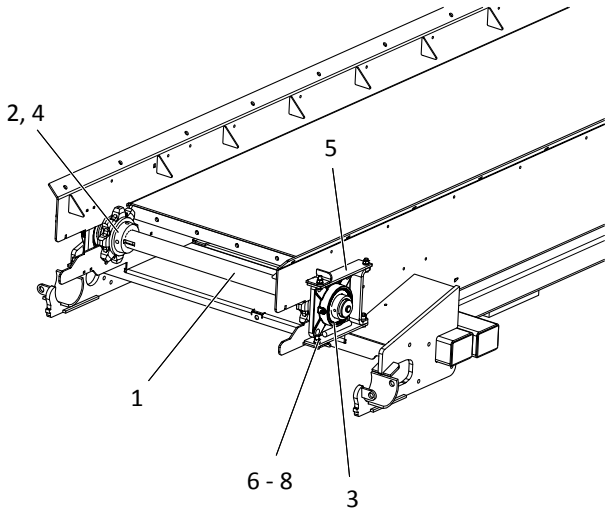

ITEM	PART NO.	DESCRIPTION	QTY
	97052	Shaft - Drive Assy, Includes Items 1 - 5	
1	310606	Shaft – Drive	1
2	88276	Sprocket	2
	20743	Screw – Set 5/16-18NC x 3/8	1
3	6465	Bearing	2
4	6131	Key – Square 3/8 x 1-1/2	2
5	82885	Guide – Bearing	4
6	36399	Cap Screw - 3/8-16NC x 1-1/4 SS	8
7	36420	Washer – Lock 3/8 SS	8
8	36414	Nut – Hex 3/8-16NC SS	8
9	313231	Mount - Torque Arm Wldmt LH 304	1
10	20128	Cap Screw - 1/2 x 1 1/4	2
11	20680	Nut – Lock 1/2-13NC	2
12	20833	Pin – Cotter 1/4 x 1-1/2	1
13	311172	V-Ring Seal	1

* Not Shown

Conveyor
Gearcase Assembly

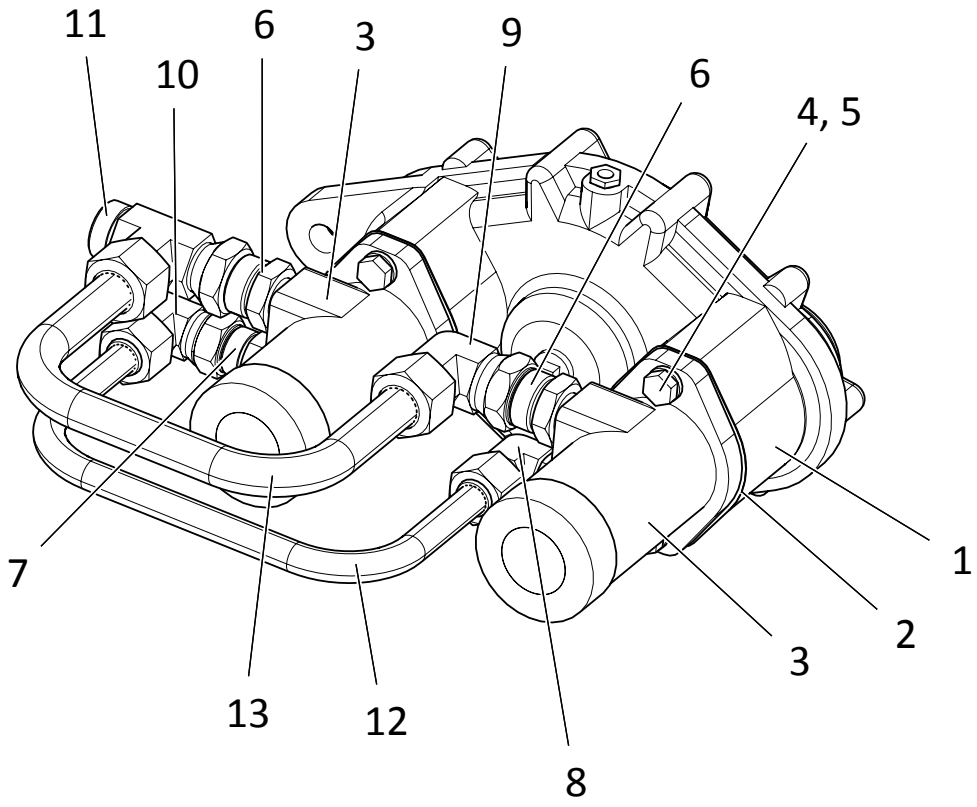

ITEM	PART NO.	DESCRIPTION	QTY
1	37985	Gearcase - Assy Dual Pinion 6:1	1
2	74524	Gasket - SAE 101-2 (B)	2
3	82459	Motor - Hydraulic 14.1 CID 1-1/4"	2
4	20714	Washer - Lock 1/2	4
5	20129	Cap Screw - 1/2-13NC x 1-1/2	4
6	313460	FItting - 16-10 520120	2
7	313459	Fitting - 12-10 520120	1
8	313458	Fitting - 12-10 520220	1
9	313461	Fitting - 16-16 520221	1
10	313462	Fitting - 12-12-12 520433	1
11	313463	Fitting - 16-16-16 520432	1
12	313318	Tube - Assy 304	1
13	313319	Tube - Assy 304	1

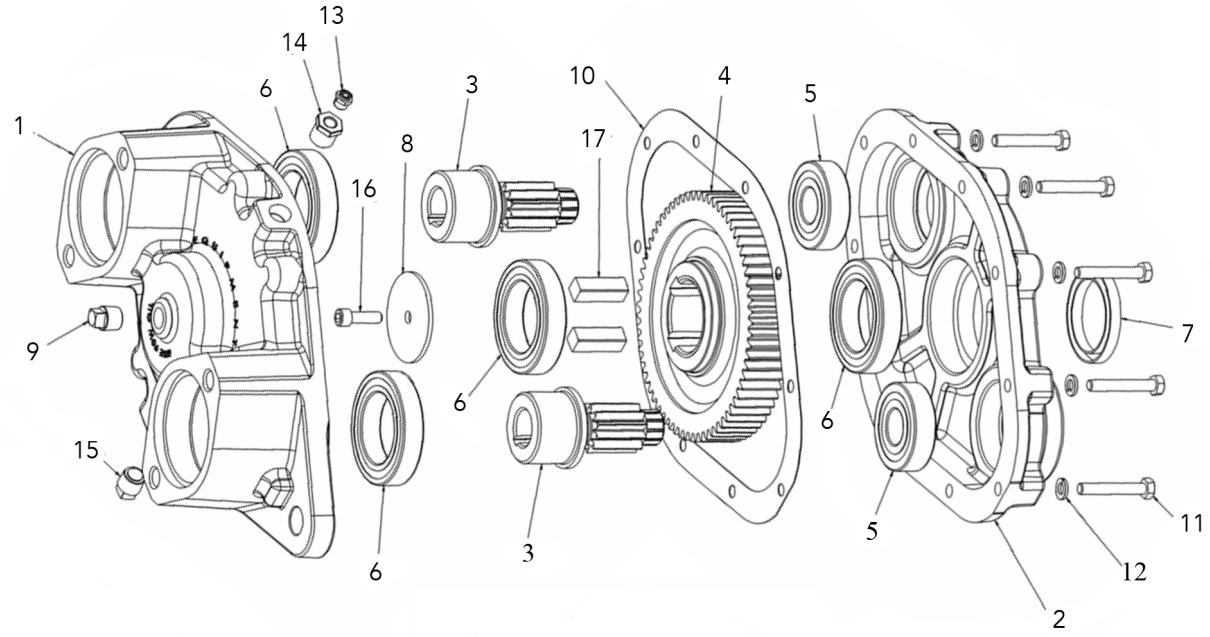

ITEM	PART NO.	DESCRIPTION	QTY
	37985	Gearcase - Assy Dual Pinion 6:1	1
1	304557	Housing – Outboard	1
2	304558	Housing – Inboard	1
3	304561	Gear – Pinion 11 Tooth	2
4	304562	Gear – Driven 67 Tooth	1
5	37007	Bearing	2
6	37008	Bearing	4
7	37006	Seal – Oil	1
8	38979	Washer – Flat 2-1/2 x 11/32	1
9	6031	Plug – Pipe	1
10	304564	Gasket – Housing	1
11	20040	Cap Screw – 5/16NC x 2	10
12	20711	Washer – Lock 5/16	10
13	2564	Cap – Breather	1
14	27465	Bushing – Pipe 1/8 x 3/8	1
15	21490	Plug – Pipe Magnetic	1
16	38980	Screw – Allen Head 5/16-18 x 1	1
17	37010	Key - 1/2 x 1/2 x 1-1/2	2

Conveyor

Gearcase Breather Tube

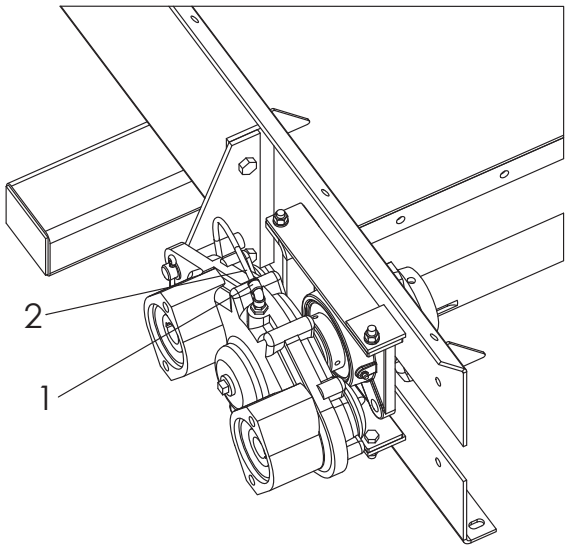

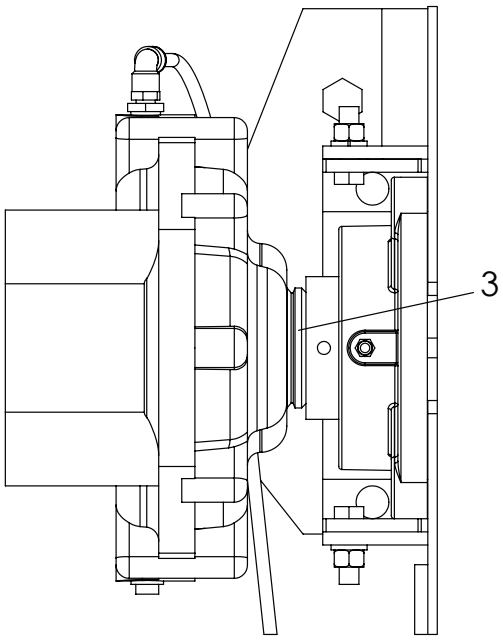

ITEM	PART NO.	DESCRIPTION	QTY
1	306891	Fitting - 4-2 630202K	1
2	9005-0-7761	Tubing - 1/4” OD Air Brake Black	1.5 ft
3	311172	V-Ring Seal	1

Conveyor
Encoder

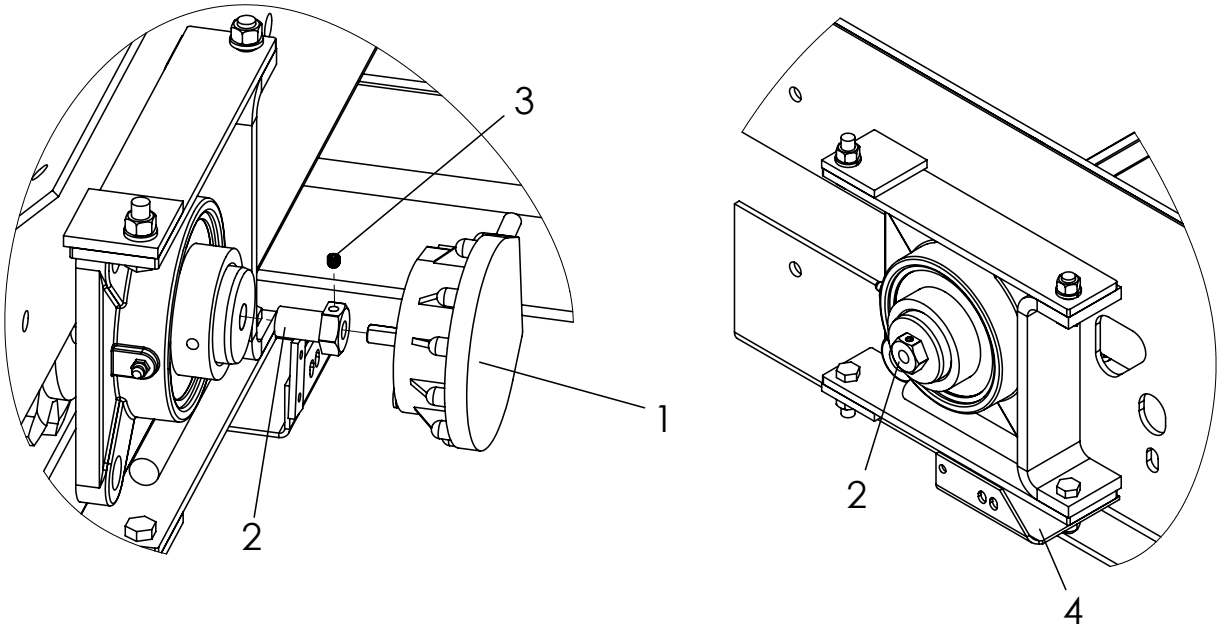

ITEM	PART NO.	DESCRIPTION	QTY
1	303994	Encoder – 180 with Hardware	1
2	310601	Coupler - Rate Sensor SS	1
3	310603	Screw - Set 1/4-20NC x 5/16 SS	1
4	304946	Bracket - Sensor, Drive Mount	1

Conveyor

Conveyor Chain Oiler

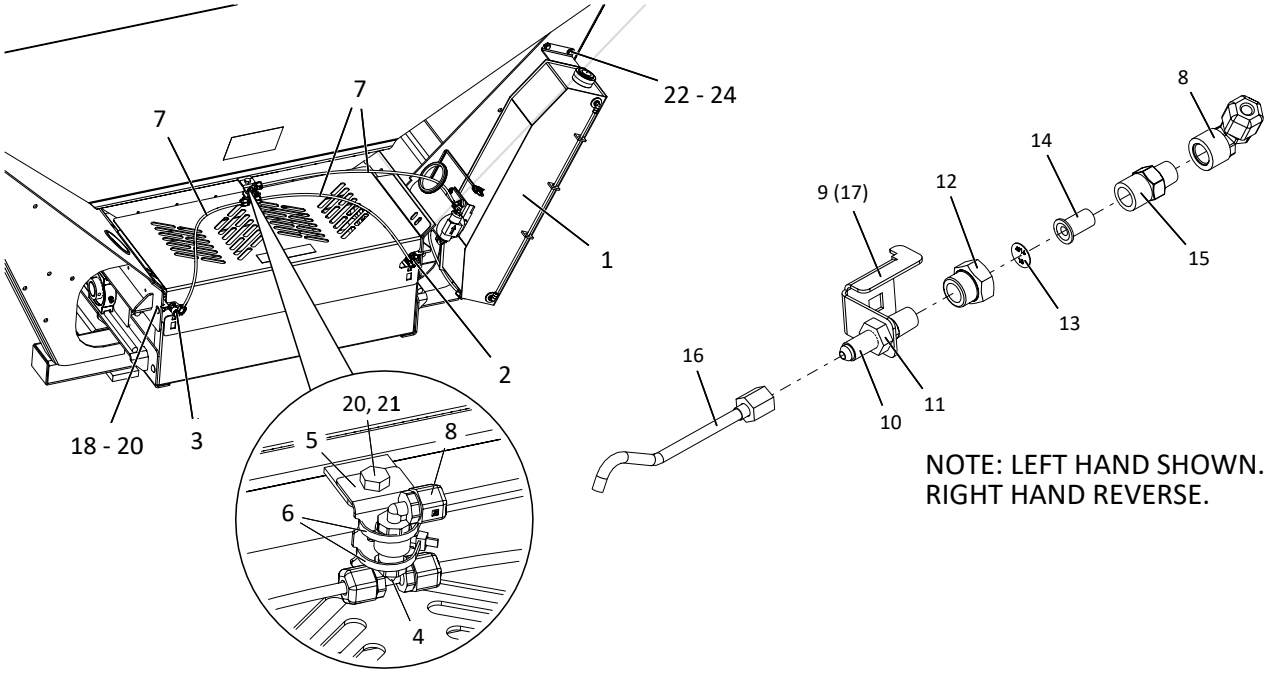

ITEM	PART NO.	DESCRIPTION		QTY
1	310760	Tank- Assy Chain Oiler, Includes Items 24- 37		1
2	314019	Nozzle- Assy LH, Includes Items 8- 16, 37		1
3	314020	Nozzle- Assy RH, Includes Items 8, 10- 17, 37		1
4	309905	Tee- HDPP 1/4 NPT Male x 1/4 Tube		1
5	306804	Bracket - Coupling		1
6	99674	Tie - Wire		2
7	301338	Tubing - Black 1/4" Nylon	24" 20"	1 2
8	309904	Elbow - HDPP 1/4 NPT Fem x 1/4 Tube		3
9	314016	Angle - Nozzle Mount LH		1
10	314012	Fitting - 4-4 070602		2
11	314261	Fitting- 4 070118		2
12	314014	Fitting- Outlet 1/4 NPT Fem x 1/4 TT Fem Nylon		2
13	314013	Plate- Orifice SS		2
14	306651	Strainer- w/ Check Valve		2
15	314015	Fitting- Adapter 1/4 NPT Male x 1/4 TT Male Nylon		2
16	314018	Nozzle- Tube 304		2
17	314017	Angle- Nozzle Mount RH		1
18	36398	Cap Screw- 3/8-16NC x 1 SS		2

Conveyor

Conveyor Chain Oiler Cont.

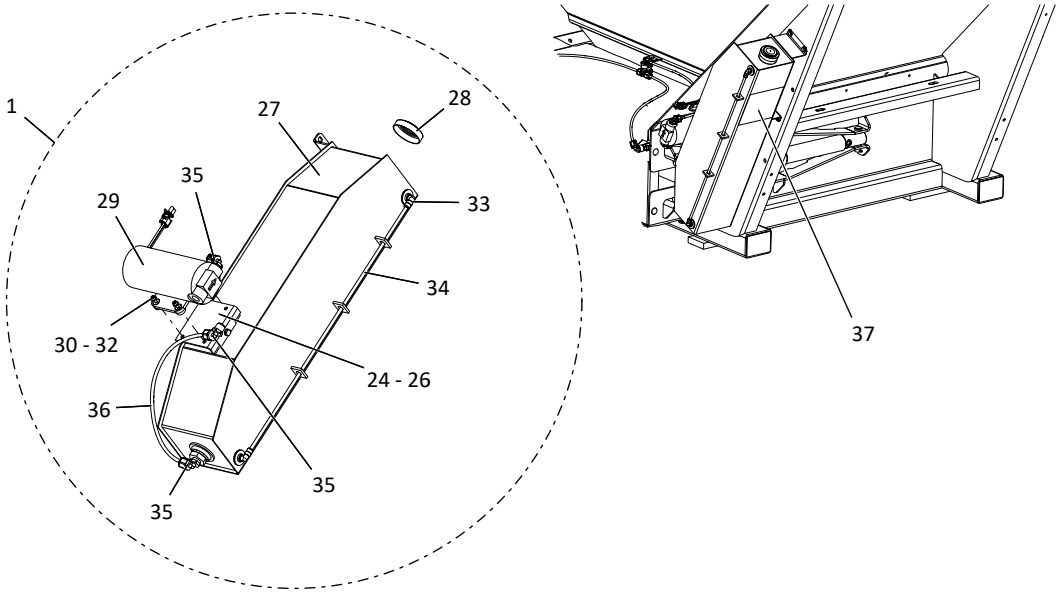

ITEM	PART NO.	DESCRIPTION		QTY
19	36425	Washer- Flat 3/8 SS	4	
20	72054	Nut- Lock 3/8-16NC SS		3
21	36293	Cap Screw- 3/8-16NC x 3/4 SS		1
22	36423	Washer- Flat 1/4 SS		8
23	42034	Nut - Lock 1/4-20NC SS		6
24	36393	Cap Screw- 1/4-20NC x 3/4 SS		5
25	36418	Washer- Lock 1/4 SS		1
26	304409	Mount- Pump		1
27	304398	Tank - Wldmt Chain Oiler, Includes Cap		1
28	21980	Cap - Vented		1
29	304390	Pump - Assy w/ Connector		1
30	44454	Screw- Socket Head #10-24NC x 1 SS		4
31	171052	Washer- Flat #10 SS		8
32	56355	Nut - Lock #10-24NC SS		4
33	301337	Fitting - 90° Male 1/8 NPT		2
34	306437	Tubing - Clear 1/4 OD x 24-3/4"		1
35	309902	Elbow - HDPP 3/8 NPT Male x 1/4 Tubing		3
36	301338	Tube - 1/4 Black Nylon	15"	1
37	21476	Decal- Notice, Conveyor Chain Life		1

Conveyor

Wiper - Front

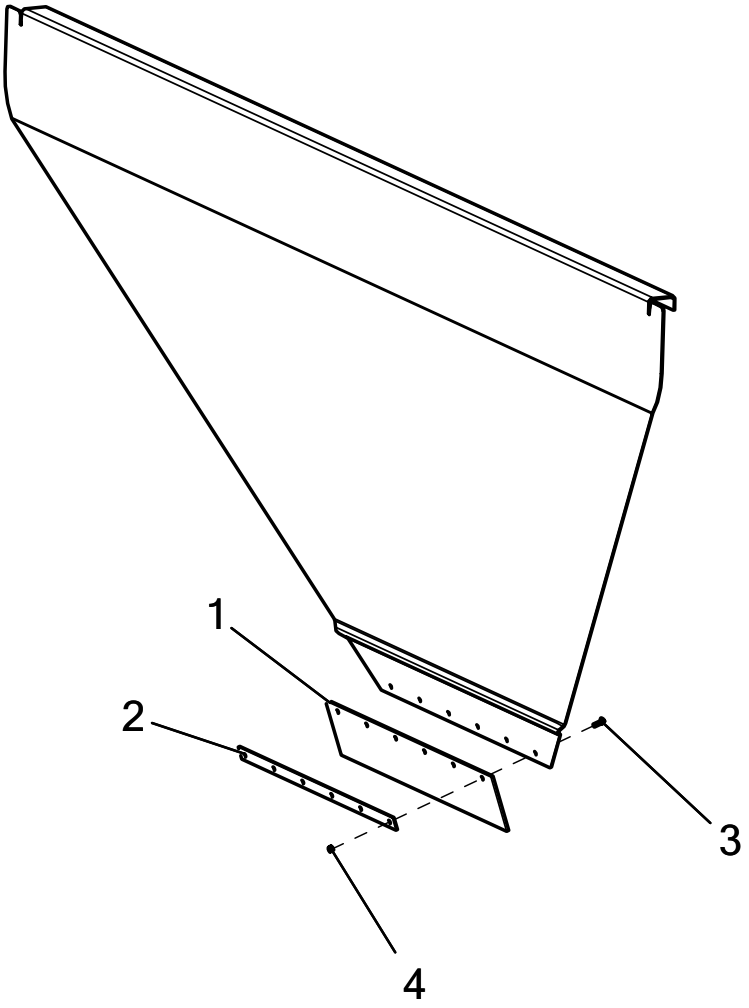

ITEM	PART NO.	DESCRIPTION	QTY
1	14743	Wiper – Belt	1
2	71656	Retainer – Belt 304	1
3	32446	Screw – TR HD 1/4 x 3/4	6
4	36412	Nut – Hex 1/4	6

Conveyor

Front Conveyor Guard

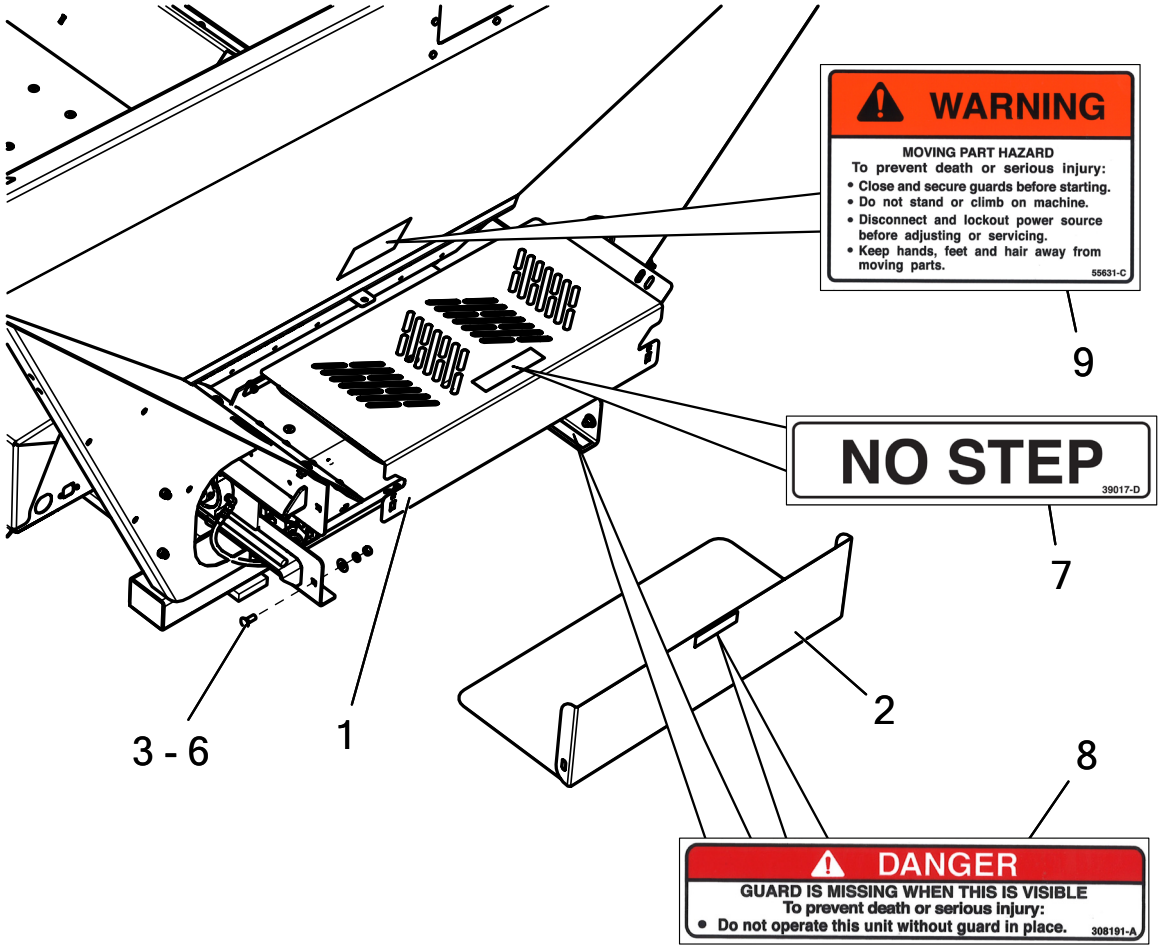

ITEM	PART NO.	DESCRIPTION	QTY
1	314316	Guard - Front Top, Includes Item 7	1
2	308860	Guard - Front Bottom, Includes Item 8	1
3	36408	Bolt - Carriage 3/8-16NC x 1 SS	2
4	36425	Washer - Flat 3/8 SS	2
5	36420	Washer - Lock 3/8 SS	2
6	36414	Nut - Hex 3/8-16NC SS	2
7	39017	Decal - No Step	1
8	308191	Decal - Danger, Guard is Missing	2
9	55631	Decal - Danger, Moving Part Hazard	1

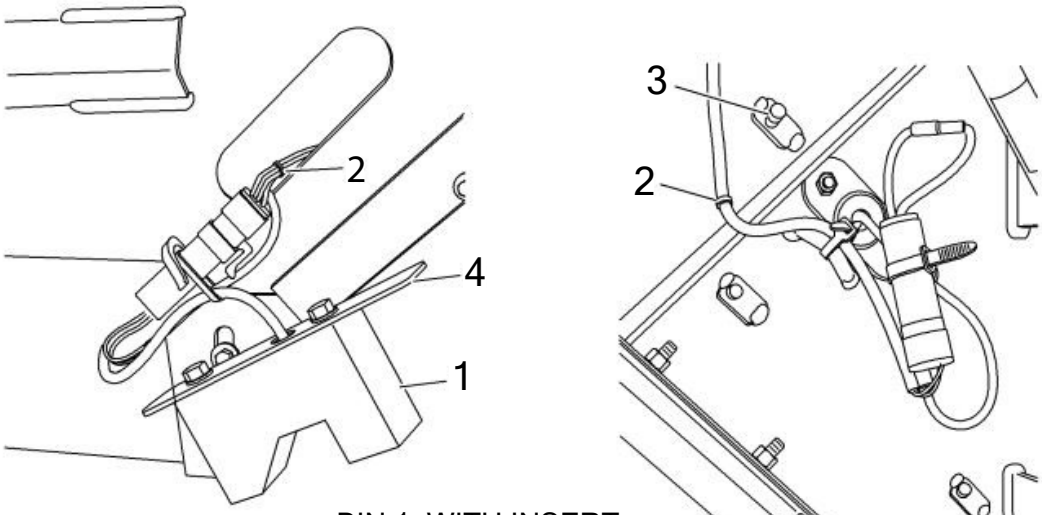

BIN 1, WITH INSERT

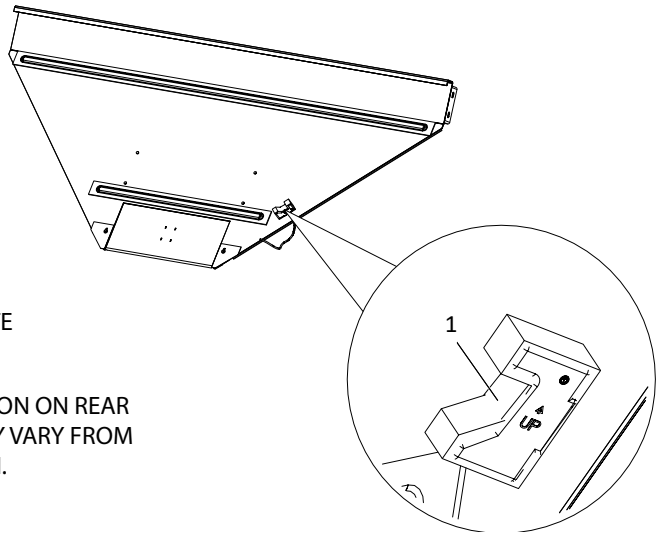

REAR ENDGATE

NOTE: LOCATION ON REAR ENDGATE MAY VARY FROM ILLUSTRATION.

ITEM	PART NO.	DESCRIPTION	QTY
1	98787-AB	Sensor - Bin Level w/ 18" Lead	AR
2	307130	Cable - Jumper 102"	AR
3	36393	Cap Screw - 1/4-20NC x 3/4 SS	AR
4	307124	Mount - Sensor 304	AR

* - Not Shown

Electronics

Enclosure Assembly Mount

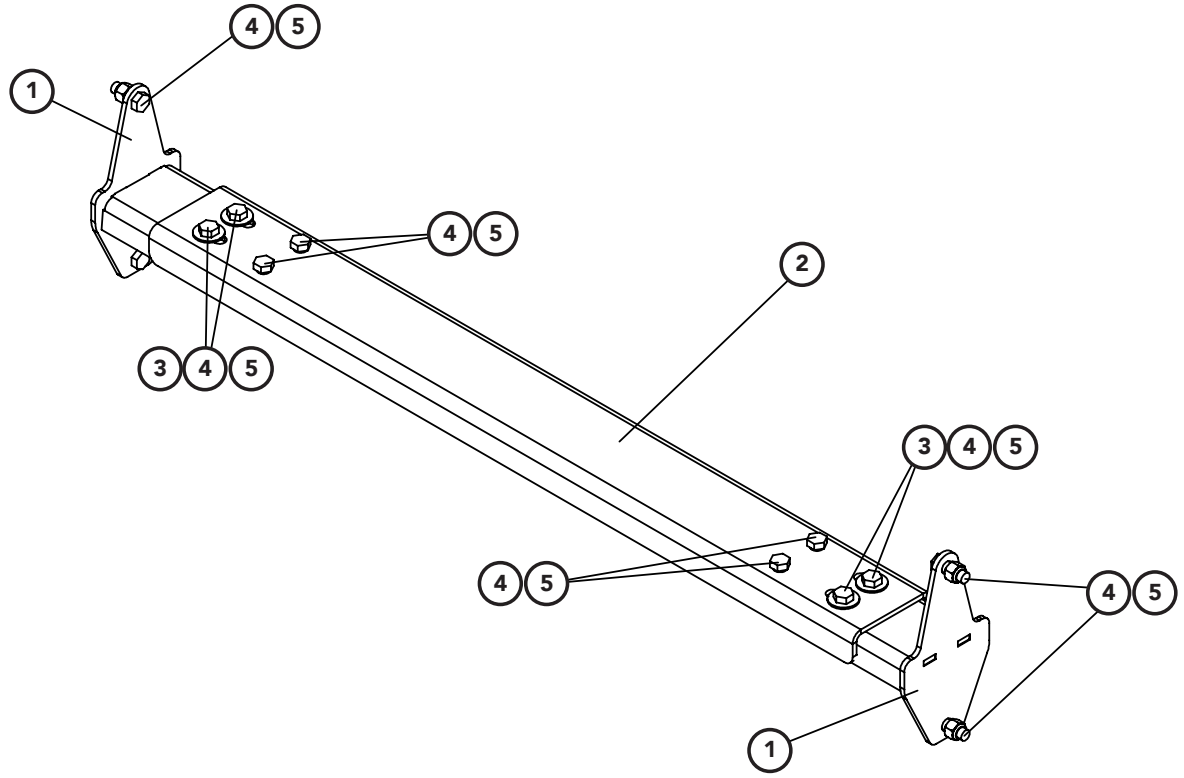

ITEM	PART NO.	DESCRIPTION	QTY
1	311850	Mount - Wldmt	2
2	310717	Channel - Mount	1
3	36425	Washer - Flat 3/8 SS	4
4	36398	Cap Screw - 3/8-16NC x 1 SS	12
5	72054	Nut - Lock 3/8-16NC SS	12

Electronics

Enclosure Assembly

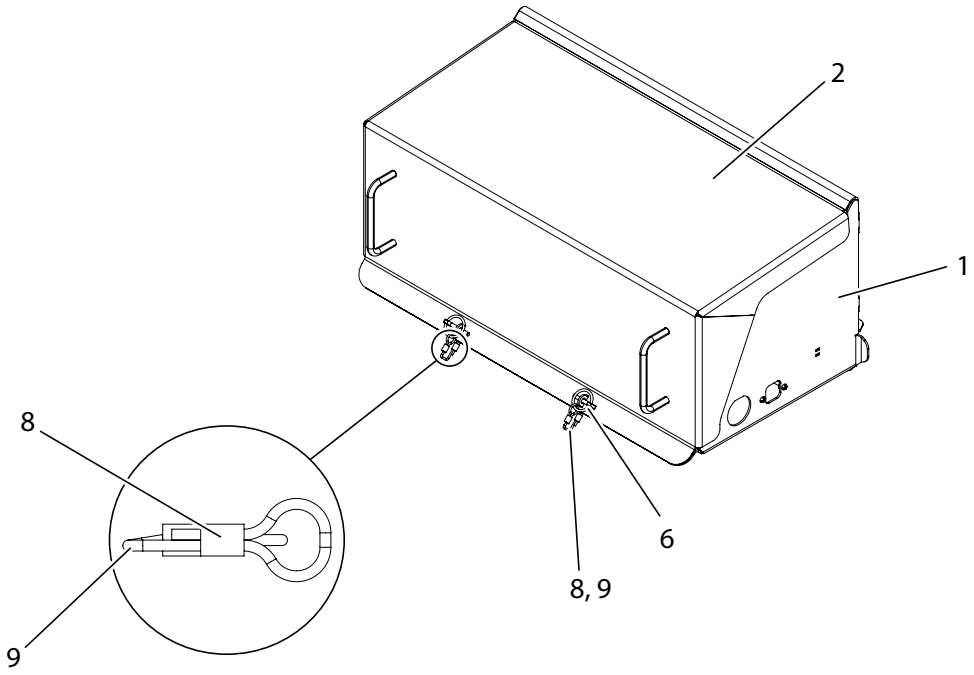

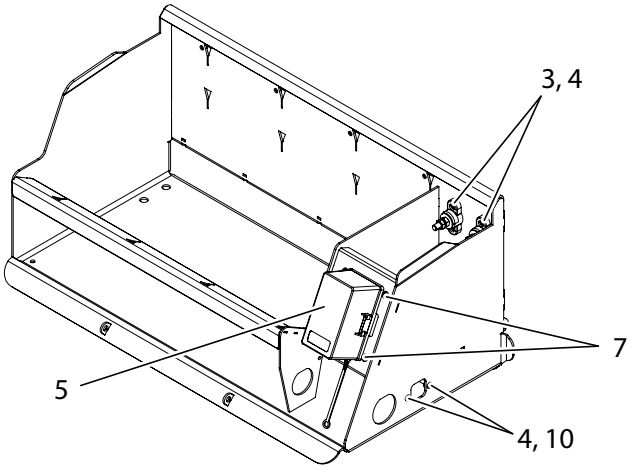

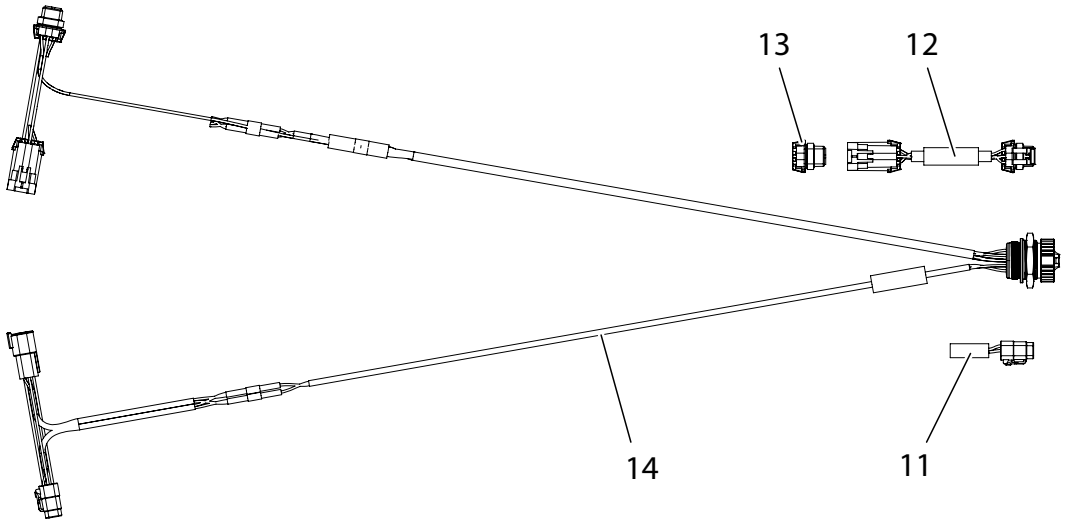

Electronics

Enclosure Assembly Cont.

ITEM	PART NO.	DESCRIPTION	QTY
	311841	Enclosure - Assy 304, Includes Items 1 - 15	1
1	310722	Enclosure- Weldment Controller 304	1
2	310724	Cover- Weldment 304	1
3	310740	Post- Power Distribution	2
4	44483	Screw- Panhead #10-24 x 3/4 SS	6
5	310739	Harness- New Leader ECU Enclosure	1
6	310732	Pin- Lynch .188 x 1.25 SS	2
7	310733	Screw- Panhead #10-32 x 1/2 SS	4
8	308085	Ferrule- .185 x .734	4
9	311731	Cable- 12 Coated SS	2
10	56355	Nut- Lock #10-24 SS	2
11	311068	Plug- Terminating Local CAN	1
12	311070	Harness- ISOBUS Active Termination, Includes Item 14	1
13	311069	Circuit- Terminating Bias ISO CAN	1
14	312448	Harness- ISOBUS Diagnostic Tee	1

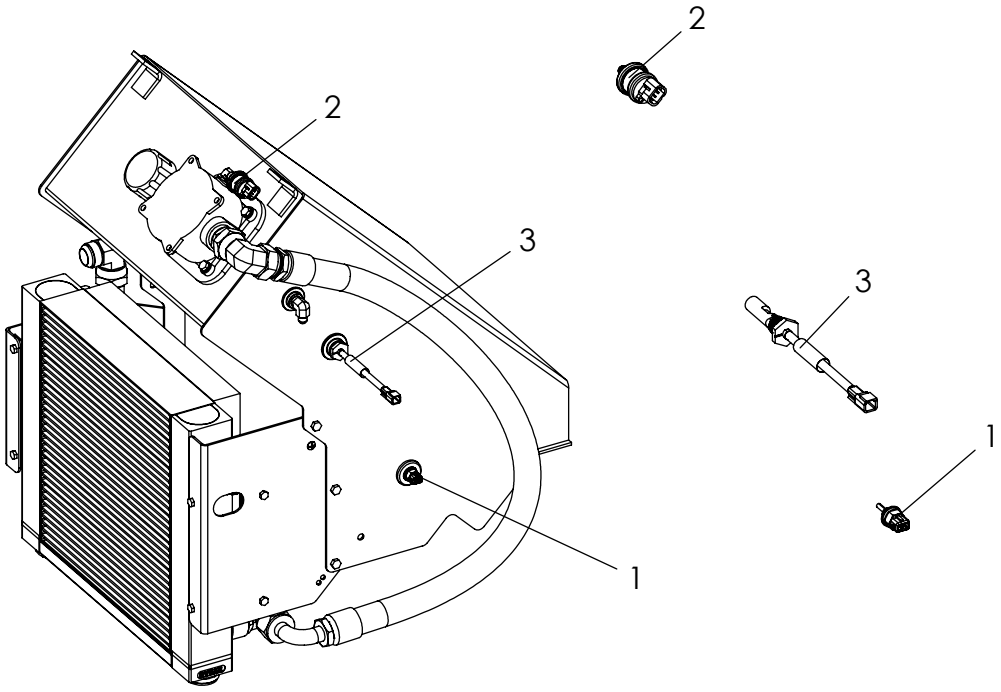

ITEM	PART NO.	DESCRIPTION	QTY
1	311075	Sensor- Temp	1
2	311076	Switch- Pressure	1
3	316127	Sensor- Oil Level	1

Electronics

Spinner Speed Sensors

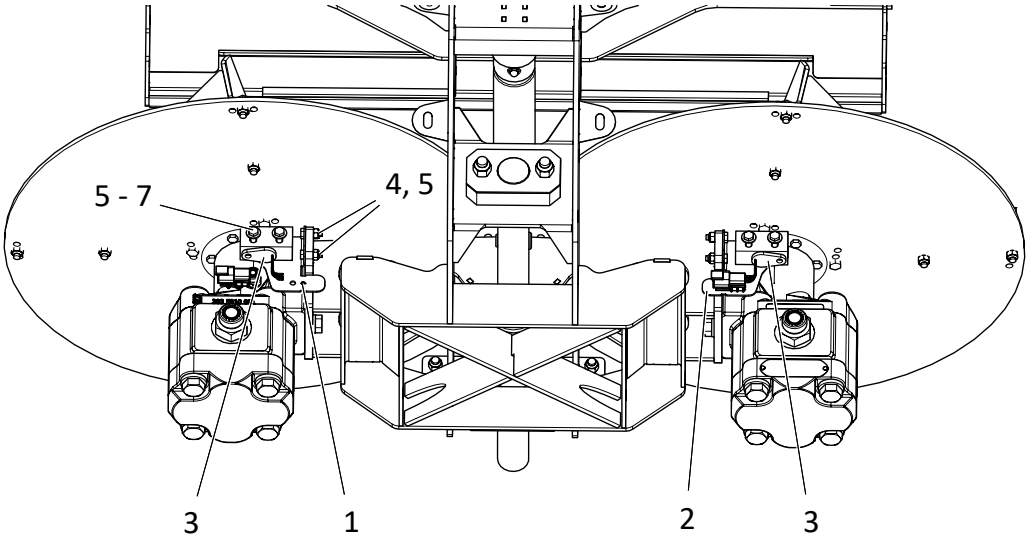

ITEM	PART NO.	DESCRIPTION	QTY
1	313432-AA	Bracket- Spinner Speed Sensor RH	1
2	313432-AB	Bracket- Spinner Speed Sensor LH	1
3	313971	Sensor - Assy w/ Block, Includes Items 3 & 4	2
4	36394	Cap Screw - 1/4-20NC x 7/8 SS	4
5	42034	Nut - Lock 1/4-20NC SS	8
6	42448	Cap Screw - 1/4-20NC x 1-1/2 SS	4
7	36423	Washer - Flat 1/4 SS	4

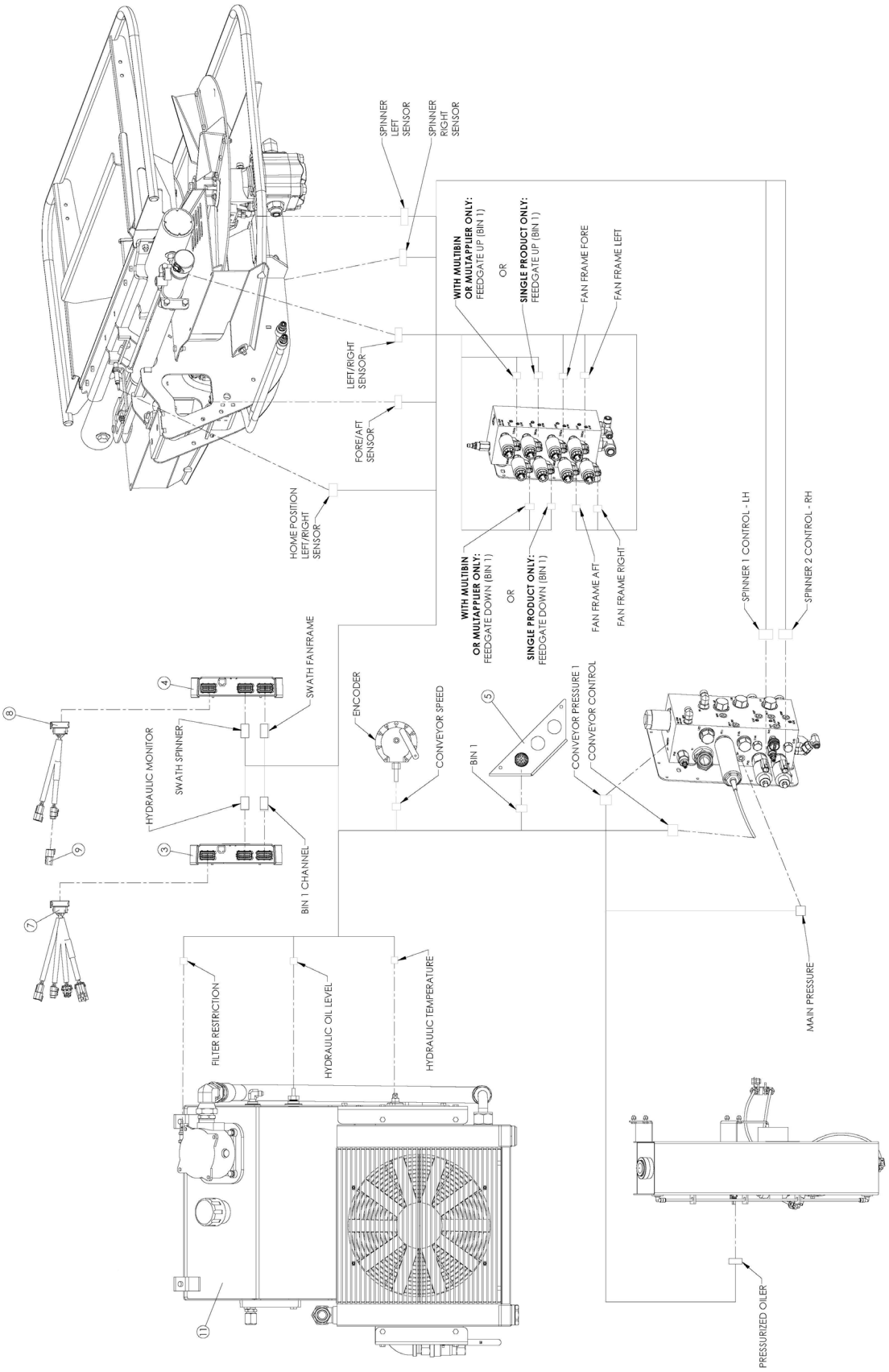
SPINNER LEFT SENSOR
SPINNER RIGHT SENSOR
WITH MULTIBIN OR MULTAPPLIER ONLY: FEEDGATE UP (BIN 1)
OR
SINGLE PRODUCT ONLY: FEEDGATE UP (BIN 1)
FAN FRAME FORE
FAN FRAME LEFT
LEFT/RIGHT SENSOR
FORE/AFT SENSOR
HOME POSITION LEFT/RIGHT SENSOR
WITH MULTIBIN OR MULTAPPLIER ONLY: FEEDGATE DOWN (BIN 1)
OR
SINGLE PRODUCT ONLY: FEEDGATE DOWN (BIN 1)
FAN FRAME AFT
FAN FRAME RIGHT
SPINNER 1 CONTROL - LH
SPINNER 2 CONTROL - RH
SWATH FANFRAME
ENCODER
CONVEYOR SPEED
BIN 1
CONVEYOR PRESSURE 1
CONVEYOR CONTROL
HYDRAULIC MONITOR
SWATH SPINNER
BIN 1 CHANNEL
MAIN PRESSURE
FILTER RESTRICTION
HYDRAULIC OIL LEVEL
HYDRAULIC TEMPERATURE
PRESSURIZED OILER

Electronics

Controller - Main Bin Cont.

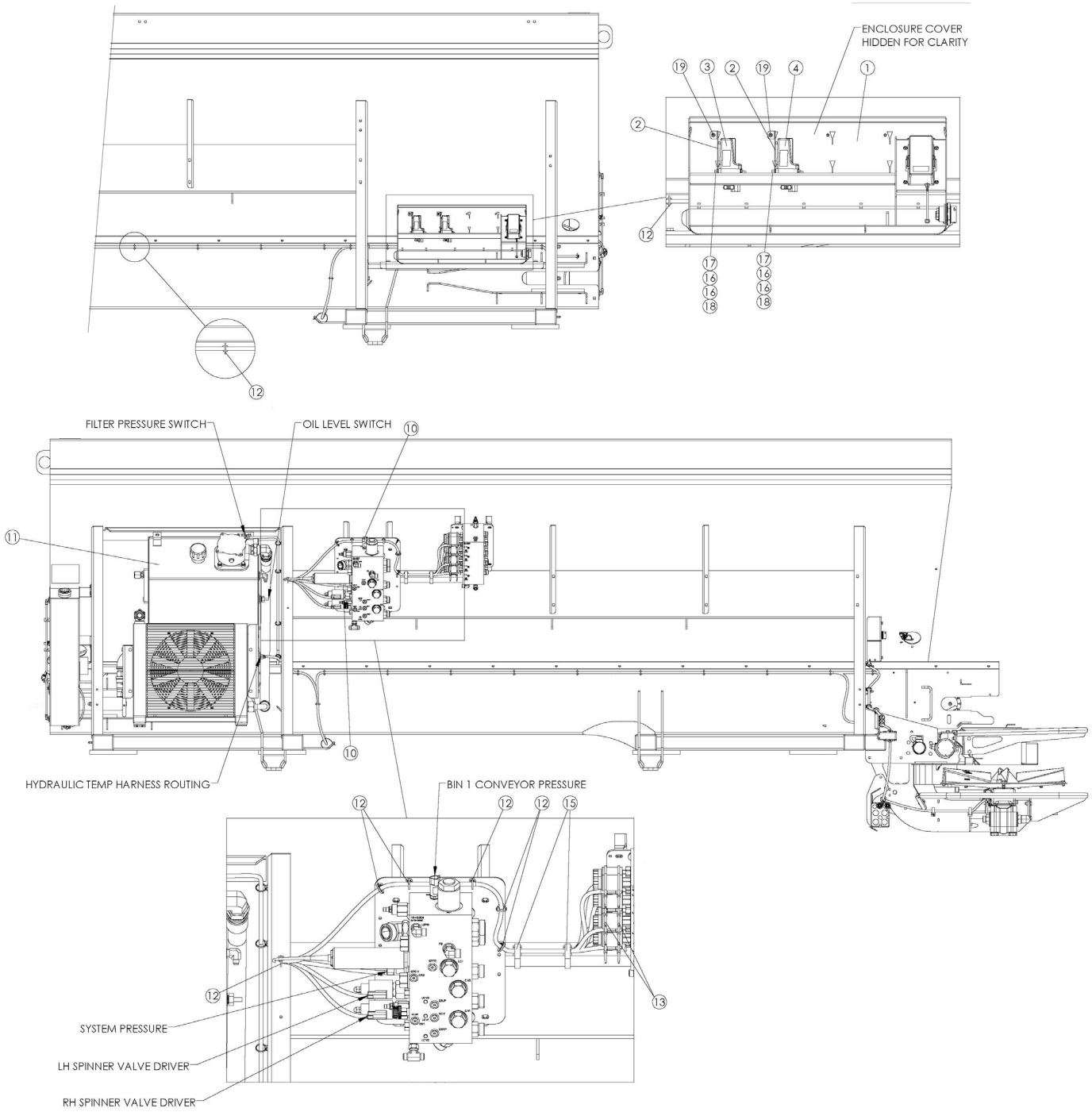

Electronics

Controller - Main Bin Cont.

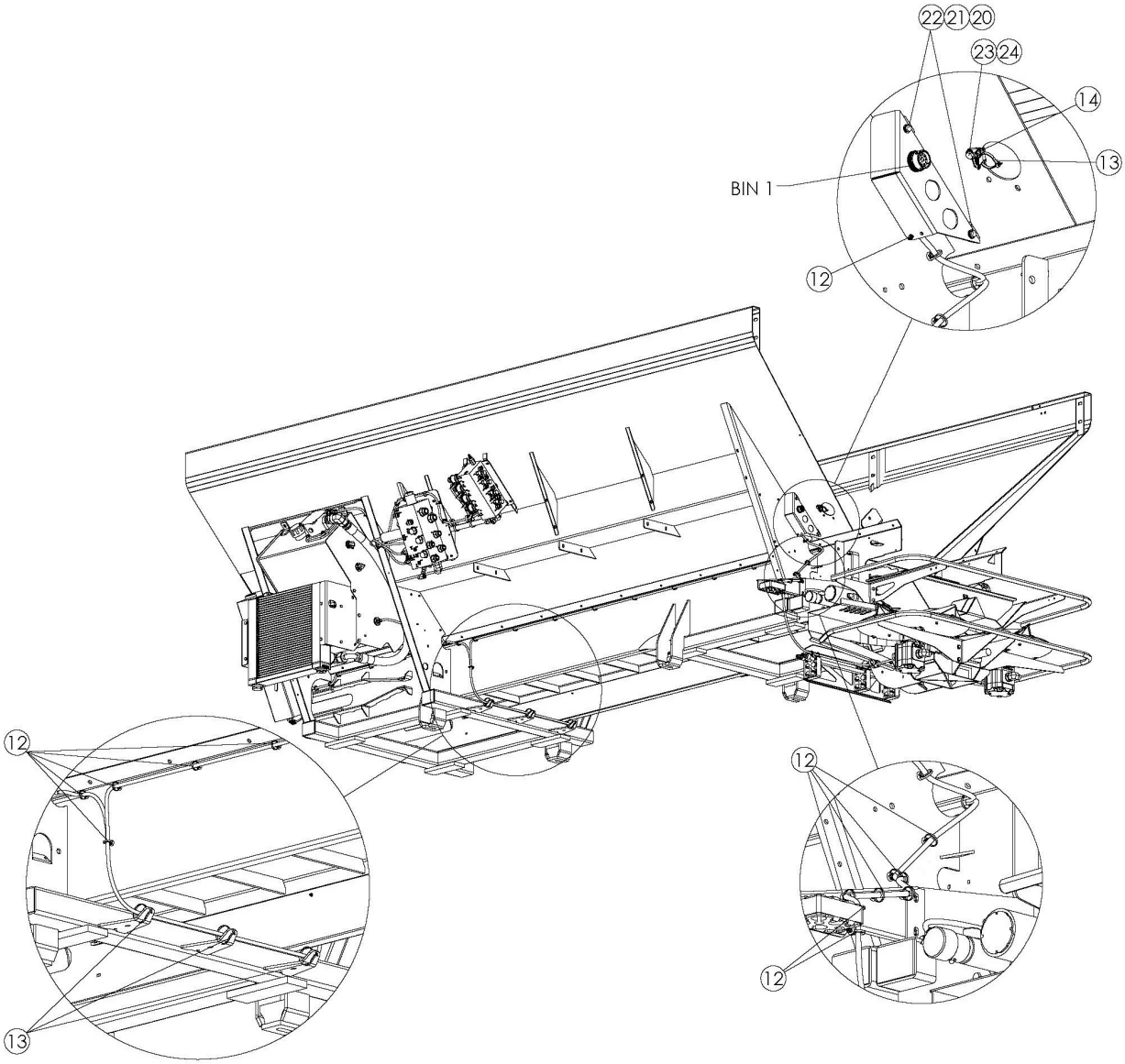

ITEM	PART NO.	DESCRIPTION	QTY
1	311841	Enclosure - Assy	1
2	310718	Bracket - Module 304	2
3	310734	Module - Master Control	1
4	313689	Module - Swath Control	1
5	316583	Bulkhead - Harness Brkt Formed	1
6	316137	Harness - G5 Master Control	1
7	310754	Harness - Isobus Breakout	1

Electronics

Controller - Main Bin Cont.

ITEM	PART NO.	DESCRIPTION	QTY
8	311060	Harness - Local Can Breakout	1
9	311067	Receptacle - Terminating Local	1
10	311074	Transducer - Pressure	2
11	311845	Sensor - Group Hyd Tank	1
12	311806	Tie - Wire Fir Tree	69
13	99674	Strap - Zip Tie 8 Black	23
14	312964	Clip - Harness Mounting	1
15	310648	Tie - Dual Clamp	6
16	36425	Washer - Flat .375 SS	8
17	36296	Capscrew - .3846 X 2.75 SS	4
18	307395	Nut - Lock Thin .375-16nc SS	4
19	44483	Screw - Round Head #10-24nc X	2
20	36423	Washer - Flat .25 SS	4
21	36418	Washer - Lock .25 SS	4
22	36393	Capscrew - .25-20nc X .75 SS	4
23	34580	Capscrew - .313-18nc X 1 SS	1
24	42221	Nut - Lock .313-18nc SS	1

Electronics

Controller - MultApplier

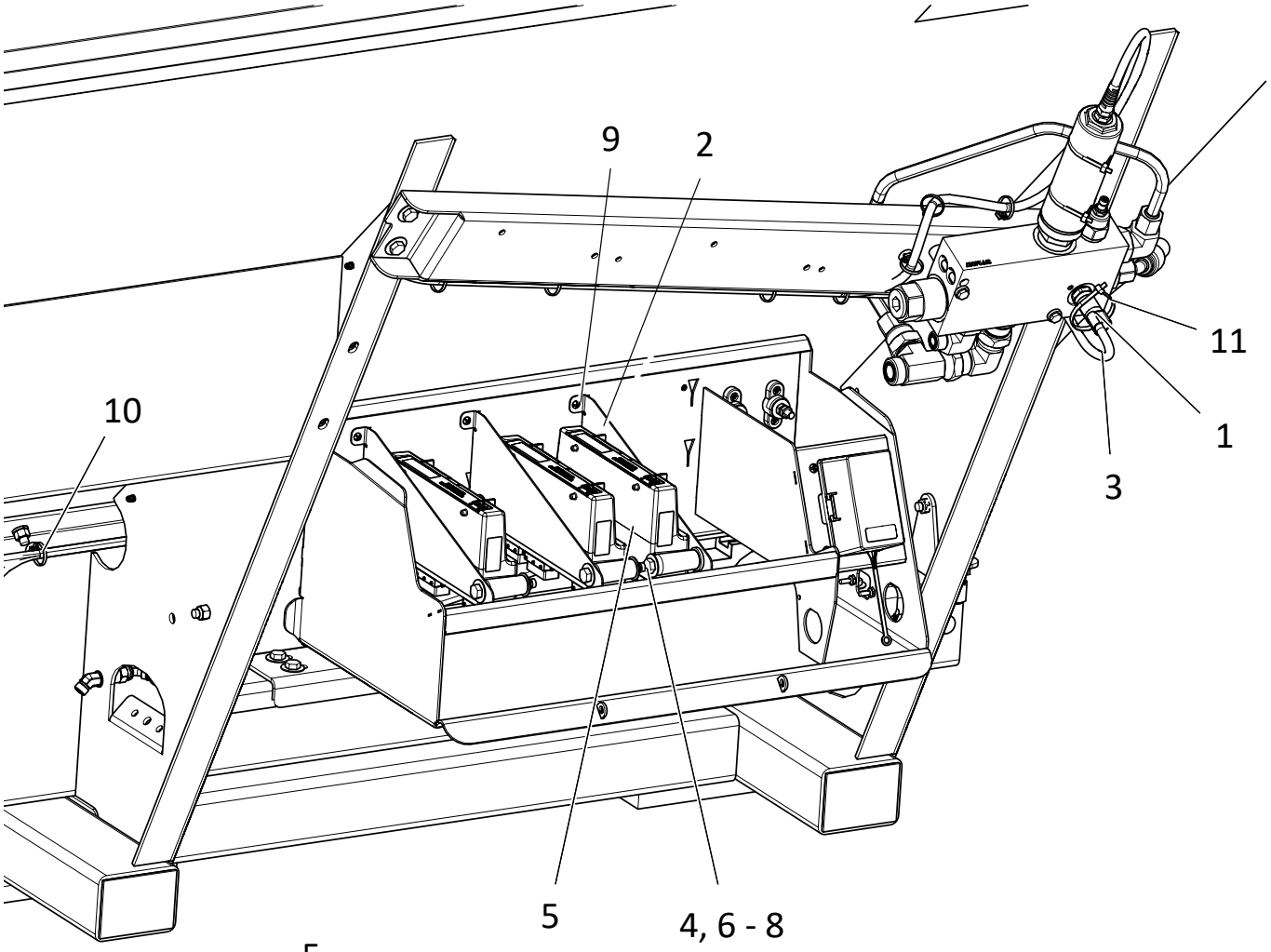

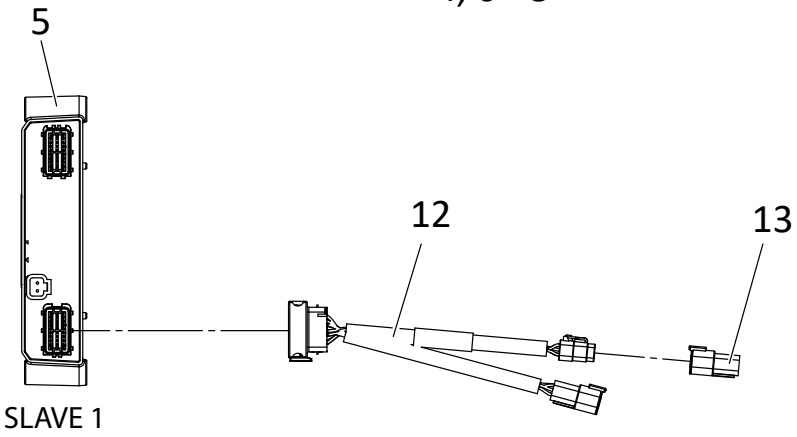

Electronics

Controller - MultApplier Cont.

ITEM	PART NO.	DESCRIPTION	QTY
1	311074	Transducer - Pressure	1
2	310718	Bracket - Module 304	1
3	316138	Harness - Bin 2 Channel Control, 13’ - 14’	1
4	313975	Spacer - 10ga 304	2
5	310735	Module - Slave Control	1
6	36425	Washer - Flat 3/8 SS	4
7	36296	Cap Screw - 3/8-16NC x 2-3/4 SS	2
8	307395	Nut - Lock Thin 3/8-16NC SS	2
9	44483	Screw - Panhead PHLP #10-24NC x 3/4 SS	1
10	311806	Tie - Wire Fir Tree	12
11	99674	Tie - Wire	3
12	311060	Harness - Local CAN Breakout Type I	1
13	311067	Receptacle - Terminating Local CAN	AR

AR - As Required

NOTE: See “Controller - Main Bin” on previous pages for Bin 1 controller components.

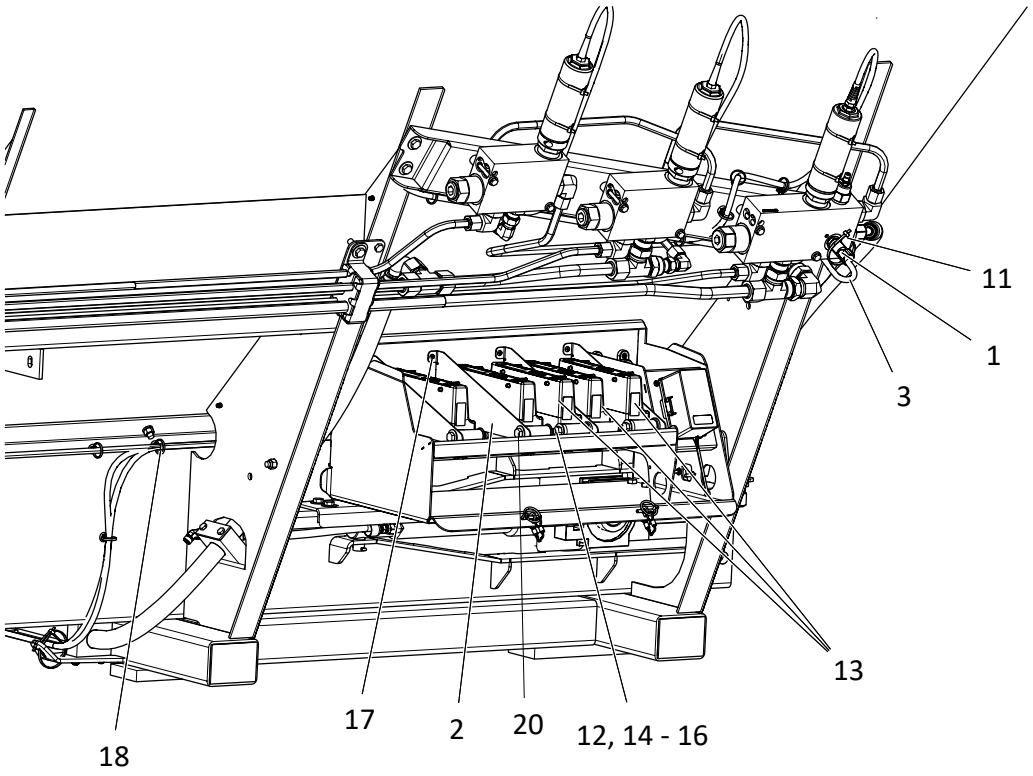
11
1
3
13
18
17
2
20
12, 14 - 16

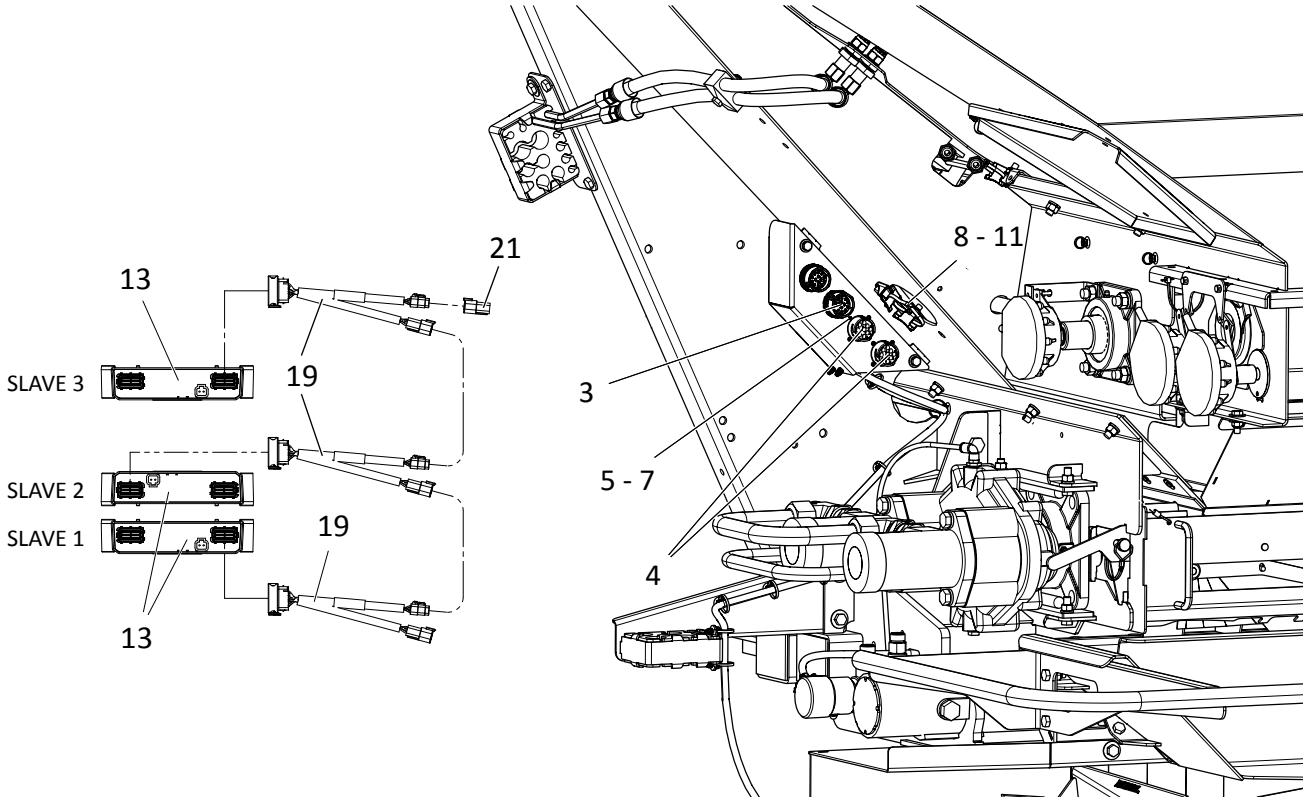
21
13
SLAVE 3
19
SLAVE 2
SLAVE 1
19
13
8 - 11
3
5 - 7
4

Electronics

Controller - MultiBin Cont.

ITEM	PART NO.	DESCRIPTION	QTY	
			3 Bin	4 Bin
1	311074	Transducer - Pressure	1	1
2	310718	Bracket - Module 304	1	2
3	316138	Harness - Bin 2 Channel Control, 13' - 14'	1	1
4	316139	Harness - Micro Bin Channel Control, 13' - 14'	1	2
5	314004	Screw - Pan head PHLP #4-40NC x 1/2 SS	4	8
6	314003	Washer - Flat #4 SS	4	8
7	314002	Nut - Lock #4-40NC SS	4	8
8	312964	Clip - Harness Mounting	1	1
9	34580	Cap Screw - 5/16-18NC x 1 SS	1	1
10	42221	Nut - Lock 5/16-18NC SS	1	1
11	99674	Tie - Wire	6	8
12	313975	Spacer - 10ga 304	2	4
13	310735	Module - Slave Control	2	3
14	36425	Washer - Flat 3/8 SS	4	8
15	310741	Cap Screw - 3/8-16NC x 5 SS	2	2
16	307395	Nut - Lock Thin 3/8-16NC SS	2	4
17	44483	Screw - Pan head PHLP #10-24NC x 3/4 SS	1	2
18	311806	Tie - Wire Fir Tree	14	15
19	311060	Harness - Local CAN Breakout Type 1	2	3
20	36296	Cap Screw - 3/8-16NC x 2-3/4 SS	--	2
21	311067	Receptacle - Terminating Local CAN	AR	AR
22	*307181-AF	Plug - Assy Sealing Mp 3-Pin	1	--
23	*307181-AH	Plug - Assy Sealing Mp 3-Pin	1	--

AR - As Required * Not Shown

NOTE: See "Controller - Main Bin" on previous pages for Bin 1 controller components.

Electronics
Body Module

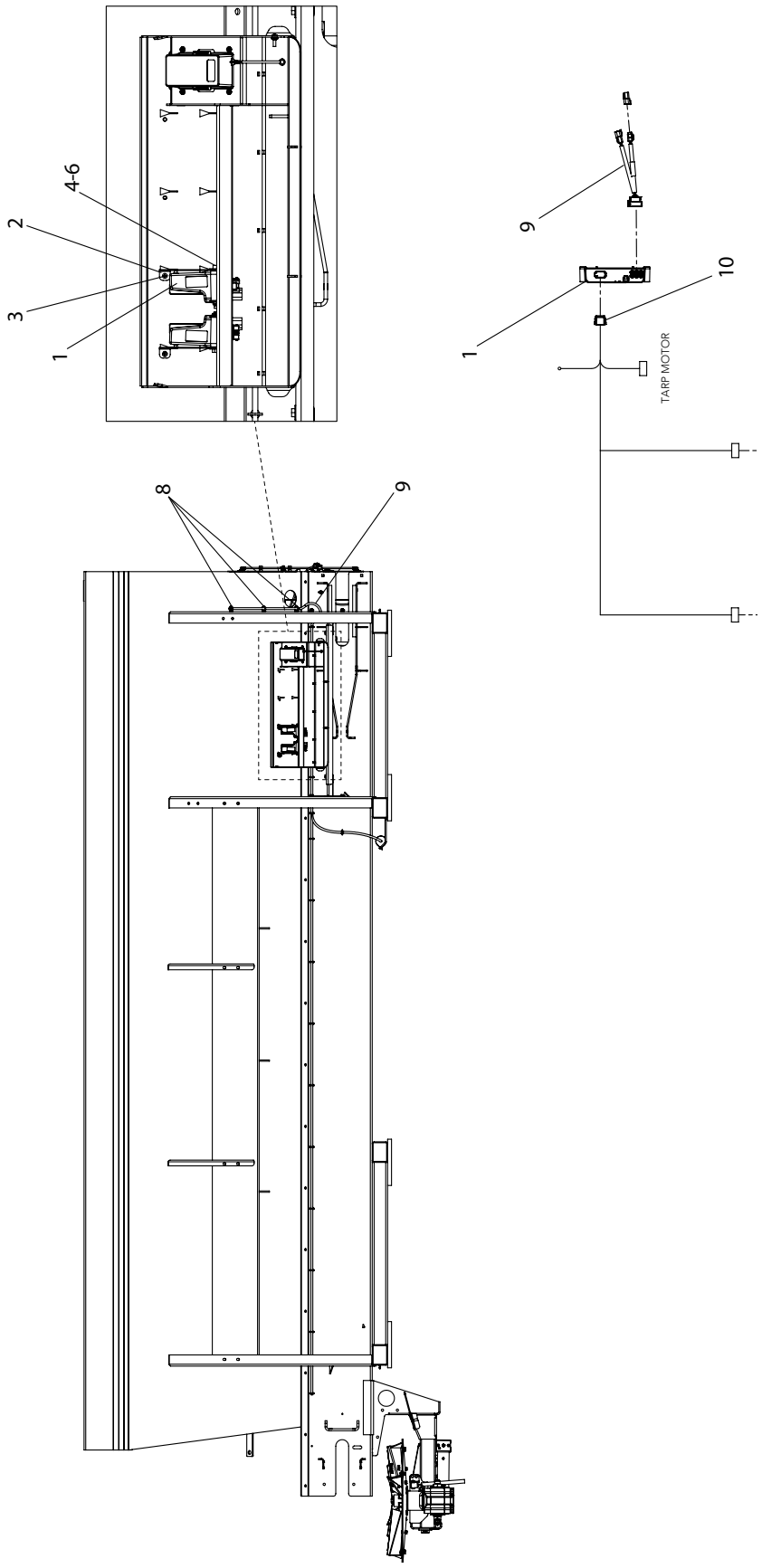

Electronics

Body Module Cont.

ITEM	PART NO.	DESCRIPTION	QTY
1	310736	Module - Body Control	1
2	310718	Bracket - Module 304	1
3	44483	Screw - Pan Head Phlp #10	1
4	36296	Capscrew - 3/8-16NC x 2-3/4 SS	2
5	36425	Washer - Flat 3/8 SS	4
6	307395	Nut - Lock 3/8-16NC SS	2
7	311060	Harness - Local CAN Breakout Type I	1
8	311806	Tie - Wire Fir Tree	3
9	312701	Cable - Body Control	1
10	316136	Harness - Body Control W/Enable	1

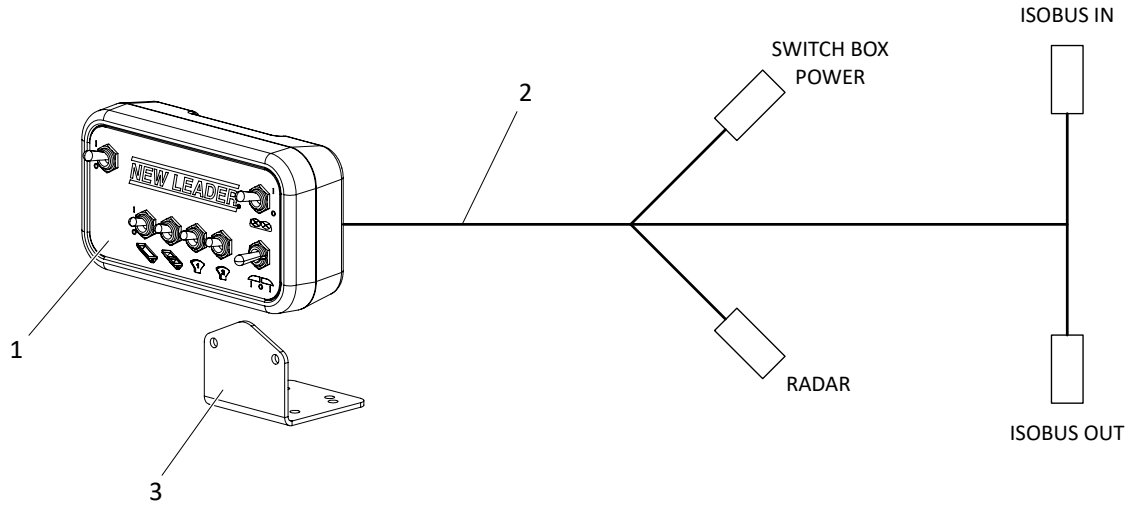

ITEM	PART NO.	DESCRIPTION	QTY
1	310742	Switch Box - NL G5	1
2	310743	Harness - ISO AUX Console	1
3	313884	Mount - Switch Box	1
4	*314488	Harness - Extension	1
5	*313581	Hardware - Kit Switch Box	1
6	**314222	Harness - Power WP	AR
	**314223	Harness - Power John Deere Strip	AR
	**314224	Harness - 9 Pin AMP ISO AUX Console	AR

* - Not Shown.

** - Harness required depends on tractor used with implement. Contact your New Leader parts dealer for details.

This page is intentionally left blank.

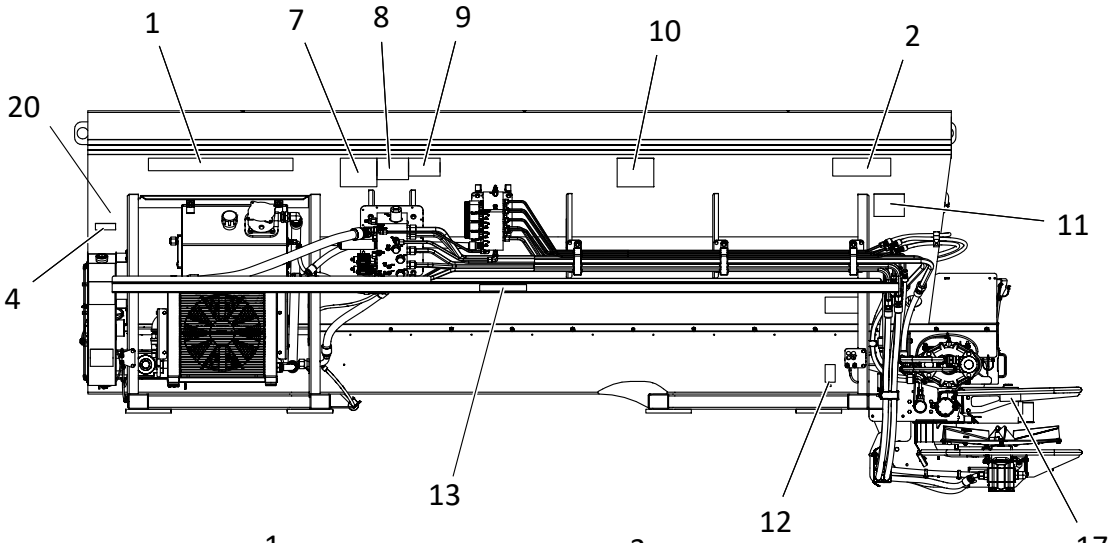
1
7
8
9
10
2
20
11
4
13
12
17

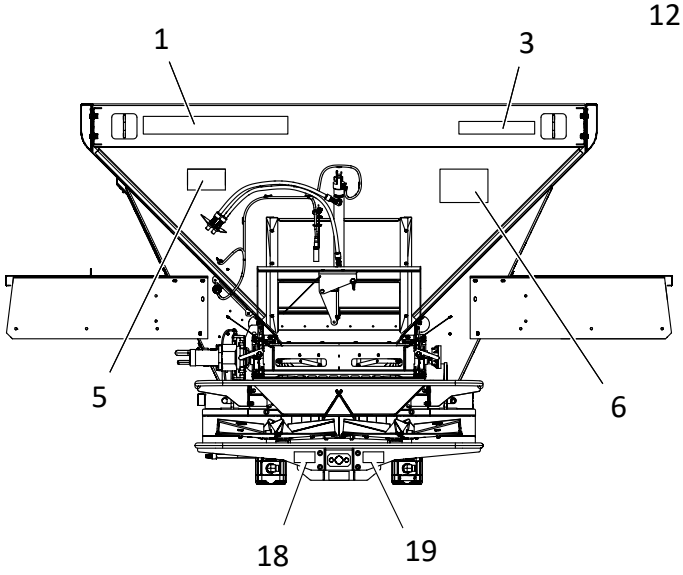
1
3
5
6
18
19

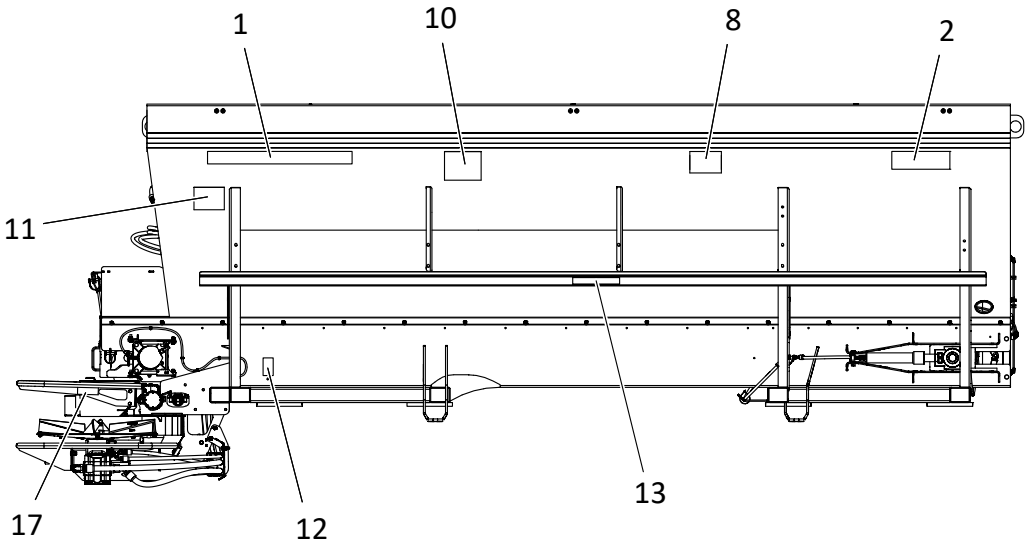
1
10
8
2
11
17
12
13

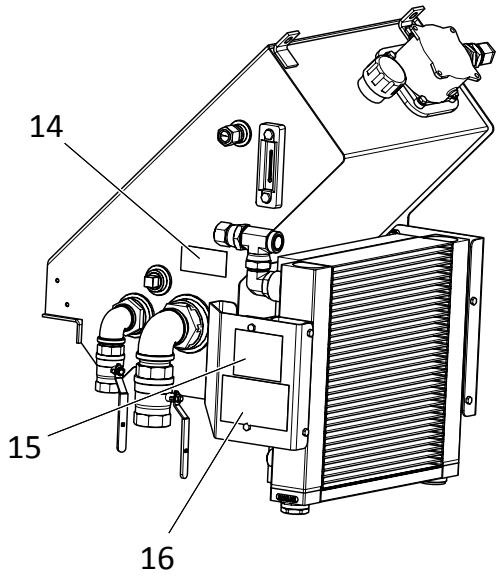

ITEM	PART NO.	DESCRIPTION	QTY
1	312561	Decal - New Leader Black	3
2	313520	Decal - G5 Black	2
3	316502	Decal - NL5000 Black	1
4	302601	Decal - Patent 6,817,551	1
5	312276	Decal - Notice, Spread Pattern	1
6	368	Decal - Notice - Flying Material	1
7	150034	Decal - Caution, Proper Operation	1
8	364	Decal - Warning, Moving Part Hazard	2
9	321	Decal - Caution, Hazardous Materials	1
10	39138	Decal - Warning, High Pressure Fluid	2
11	55241	Decal - Danger, Pinch Point Hazard	2
12	311828	Decal - Chain Tension	2
13	39200	Decal - Warning, Falling Hazard	2
14	8664	Decal - Notice, Keep Valve Open	1
15	39378	Decal - Notice, Change Filter Element	1
16	304264	Decal - Notice, Hydraulic Oil	1
17	315639	Decal - WARNING: MOVING PART HAZARD	
18	315640	Decal - WARNING: FALLING HAZARD	
19	315641	Decal - DANGER: PINCH POINT HAZARD	
20	315865	Decal - WARNING: HAZARDOUS MATERIALS	

NOTE: See Safety Section of Operator's Manual for Details.

Material Divider

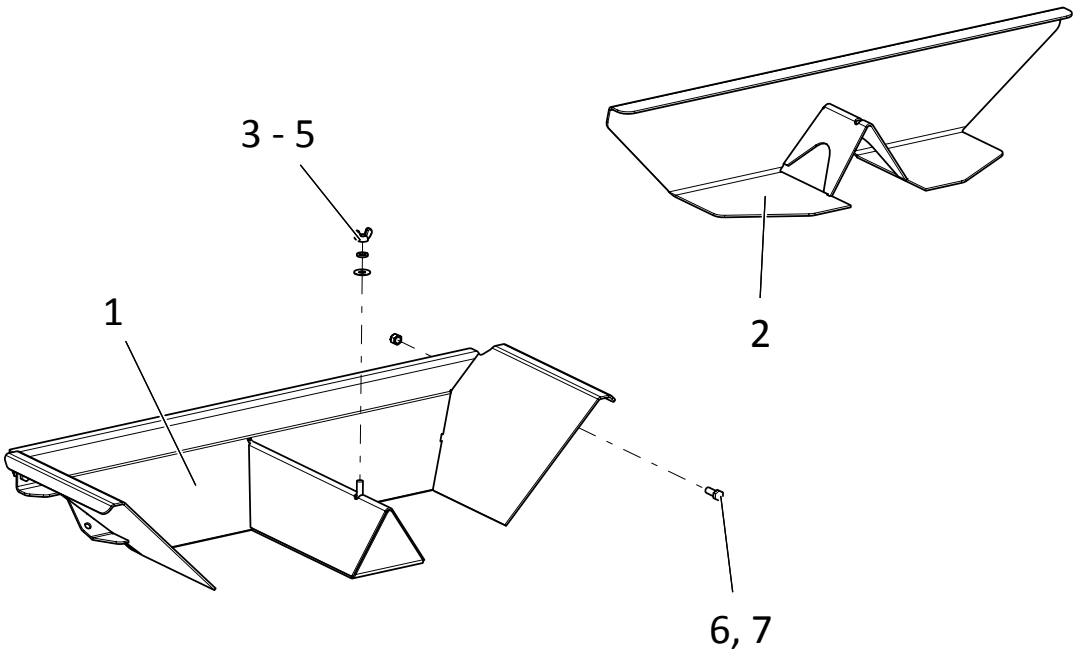

ITEM	PART NO.	DESCRIPTION	QTY
	313154	Divider – Material Assy 304	1
1	313155	Divider – Wldmt 304	1
2	313159	Deflector – Rear Wldmt 304	1
3	36425	Washer – Flat 3/8 SS	1
4	36420	Washer – Lock 3/8 SS	1
5	20673	Nut – Wing 3/8-16NC SS	1
6	36398	Cap Screw – 3/8-16NC x 1 SS	4
7	36425	Washer - Flat 3/8 SS	4

Hillside Divider

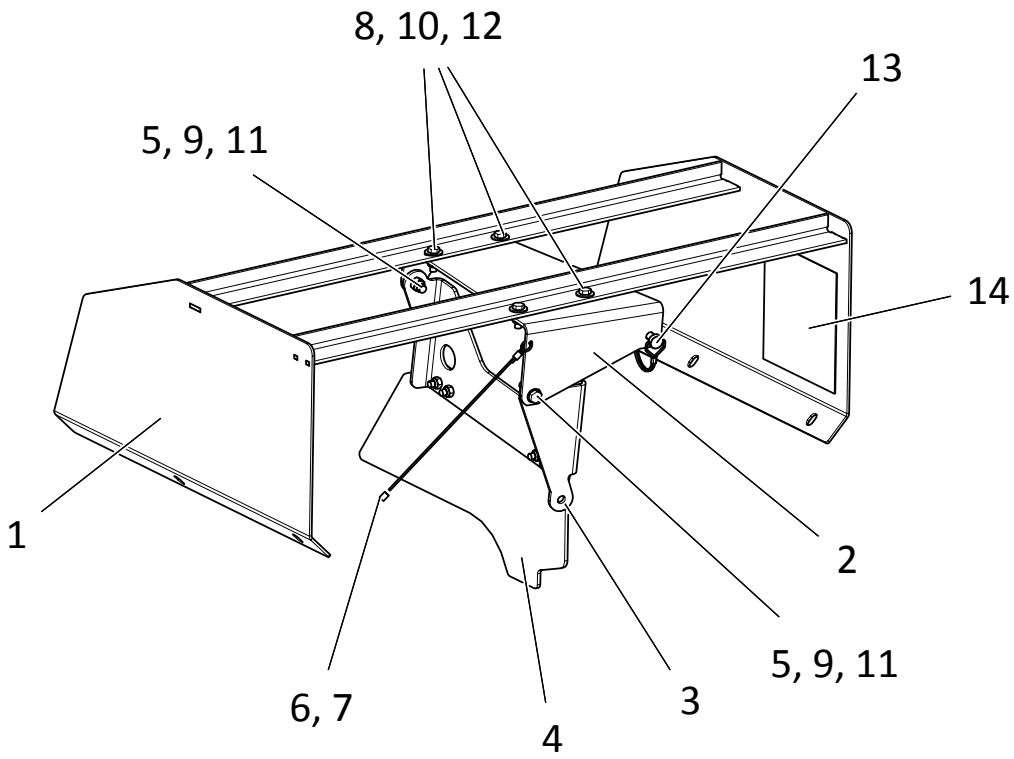

ITEM	PART NO.	DESCRIPTION	QTY
	313508	Divider - Hillside Assy 304	1
1	311721	Support - Wldmt	1
2	311725	Bracket - Upper	1
3	311728	Bracket - Lower	1
4	313509	Panel - Divider	1
5	311730	Bushing - Pivot	2
6	311731	Cable 12" Coated SS	1
7	308085	Ferrule	2
8	34580	Cap Screw - 5/16-18NC x 1 SS	8
9	36399	Cap Screw - 3/8-16NC x 1-1/4 SS	2
10	42221	Nut - Lock 5/16-18NC SS	8
11	72054	Nut - Lock 3/8-16NC SS	2
12	36424	Washer - Flat 5/16 SS	8
13	311732	Pin - Lock	1
14	55241	Decal - Danger, Pinch Point Hazard	1

Vane Assembly

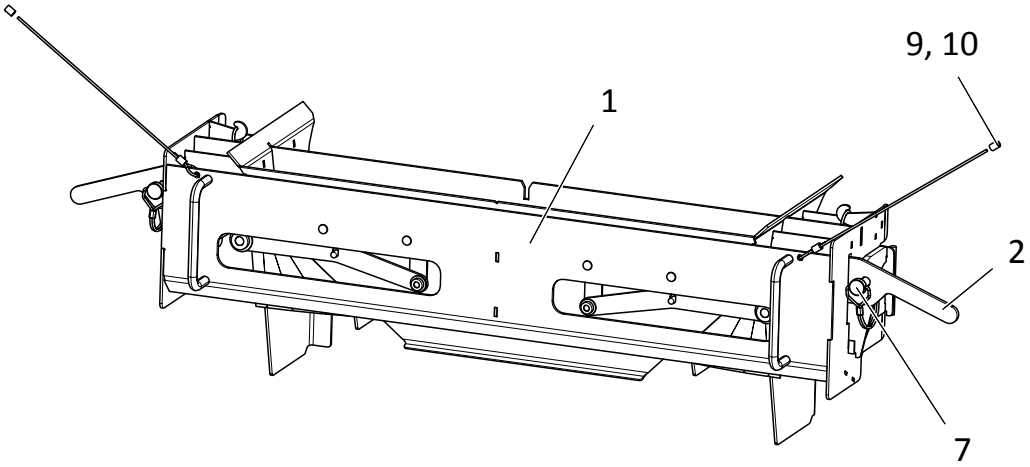

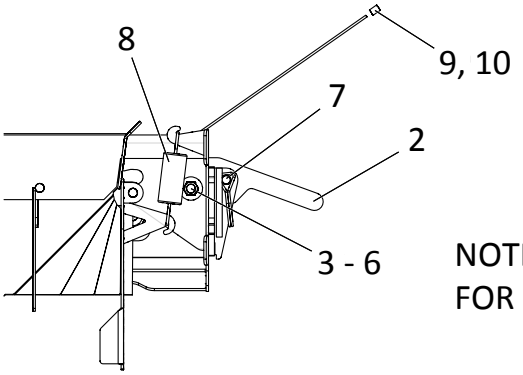

NOTE: COMPONENTS HIDDEN FOR CLARITY

ITEM	PART NO.	DESCRIPTION	QTY
	313267	Vane - Assy 304	1
1	316060	Vane - Wldmt 304	2
2	313315	Handle - 304	2
3	36425	Washer - Flat 3/8 SS	2
4	311730	Bushing - Pivot 304	2
5	36398	Cap Screw - 3/8-16NC x 1 SS	2
6	72054	Nut - Lock 3/8-16NC SS	2
7	311732	Pin - Lock	2
8	314311	Spring - SS	2
9	311731	Cable - 12" Coated SS	2
10	308085	Ferrule	4

Spinner Guards & Deflectors

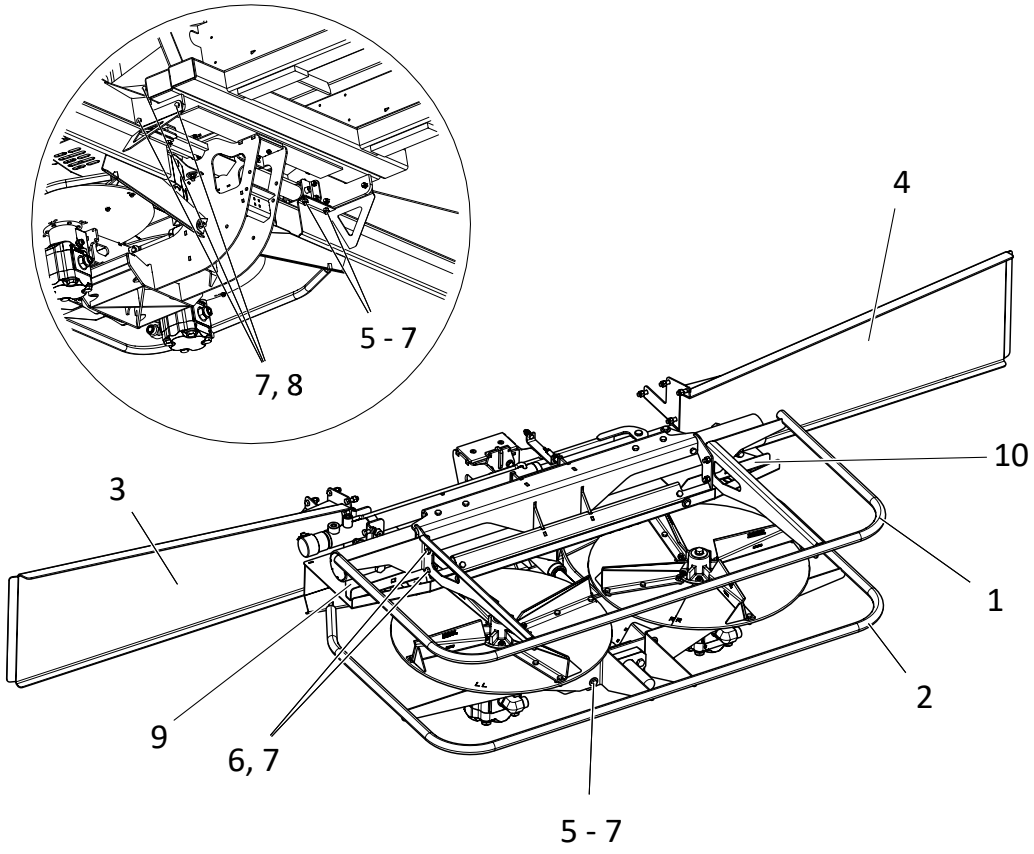

WARNING Guards are intended to reduce hazard of entanglement with machinery and injury. All guards must be installed per this drawing before spreader is put into operation.

ITEM	PART NO.	DESCRIPTION	QTY
1	315710	Guard - Wldmt Upper	1
2	315711	Guard - Wldmt Lower	1
3	313223	Deflector - Wldmt LH	1
4	313224	Deflector - Wldmt RH	1
5	36425	Washer - Flat 3/8 SS	8
6	36398	Cap Screw - 3/8-16NC x 1 SS	12
7	72054	Nut - Lock 3/8-16NC SS	24
8	36399	Cap Screw - 3/8-16NC x 1-1/4 SS	8
9	313229-AA	Deflector - LH 304	1
10	313229-AB	Deflector - RH 304	1

Spinner Assembly

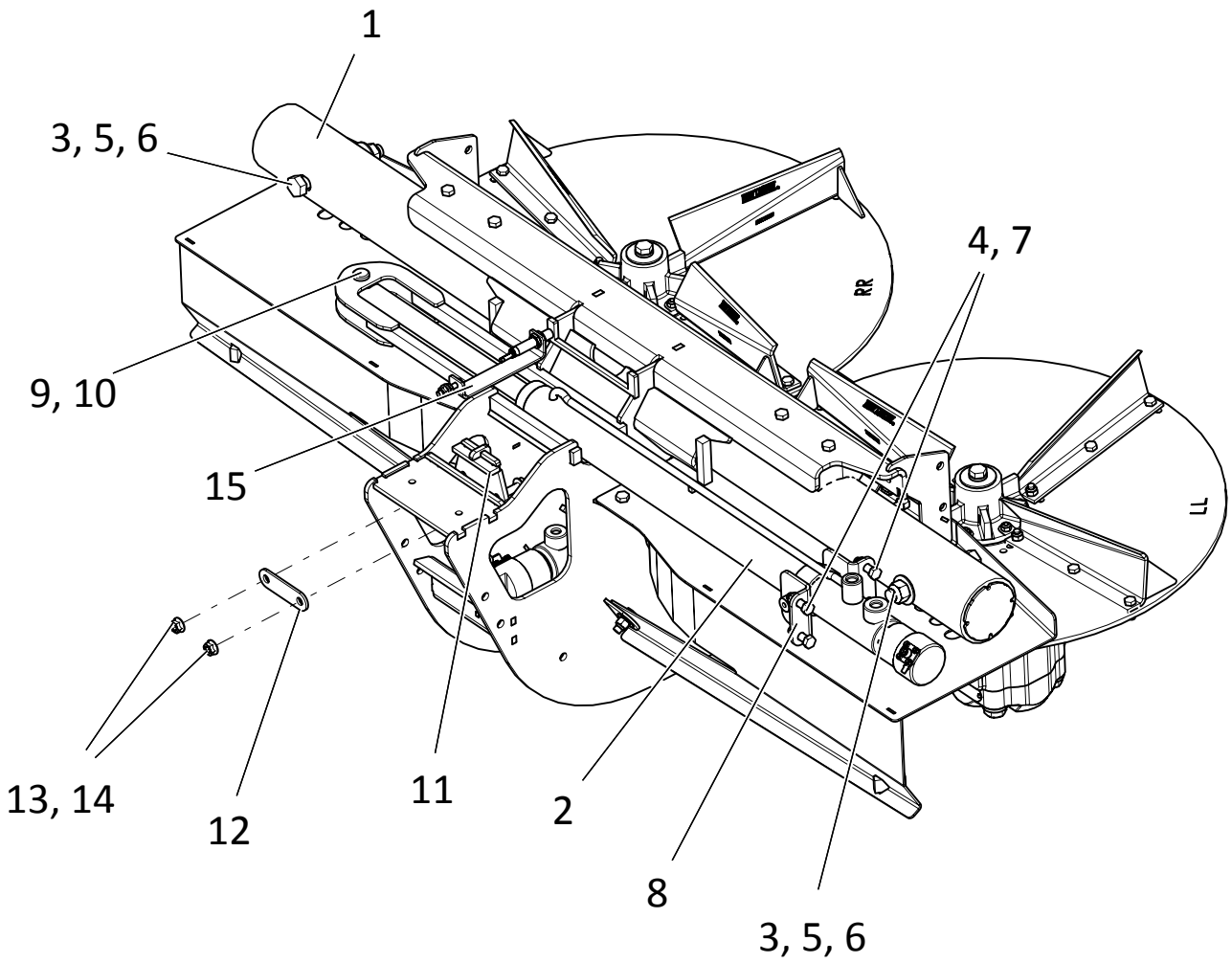

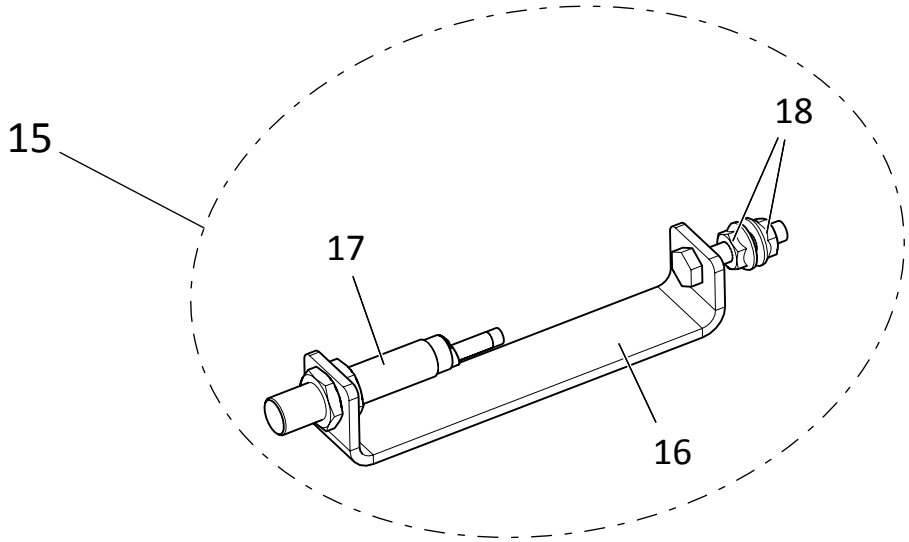

Spinners

Spinner Assembly Cont.

ITEM	PART NO.	DESCRIPTION	QTY
1	313192	Tube - Wldmt Support 304	1
2	312950	Cylinder - 1.5 x 23 w/ Sensor	1
3	313180	Cap Screw - 5/8-11NC x 5 SS	2
4	36399	Cap Screw - 3/8-16NC x 1-1/4 SS	4
5	56857	Washer - Flat 5/8 SS	2
6	41762	Nut - Lock 5/8-11NC SS	2
7	72054	Nut - Lock 3/8-16NC SS	4
8	313193	Mount - Cylinder 304	2
9	313173	Pin - Clevis	1
10	36427	Pin - Cotter	1
11	313186	Retainer - Wldmt Front 304	1
12	313194	Plate - Backing 304	1
13	313195	Bolt - Flanged 3/8-16NC x 1-1/4 SS	2
14	313196	Nut - Flanged 3/8-16NC SS	2
15	313214	Sensor - Assy 304, Includes Items 16 - 18	1
16	313215	Mount - Wldmt Sensor 304	1
17	308175	Sensor - 12mm w/ Connector	1
18	313217	Nut - Flange 1/4-20NC SS	2

Spinner Assembly Cont.

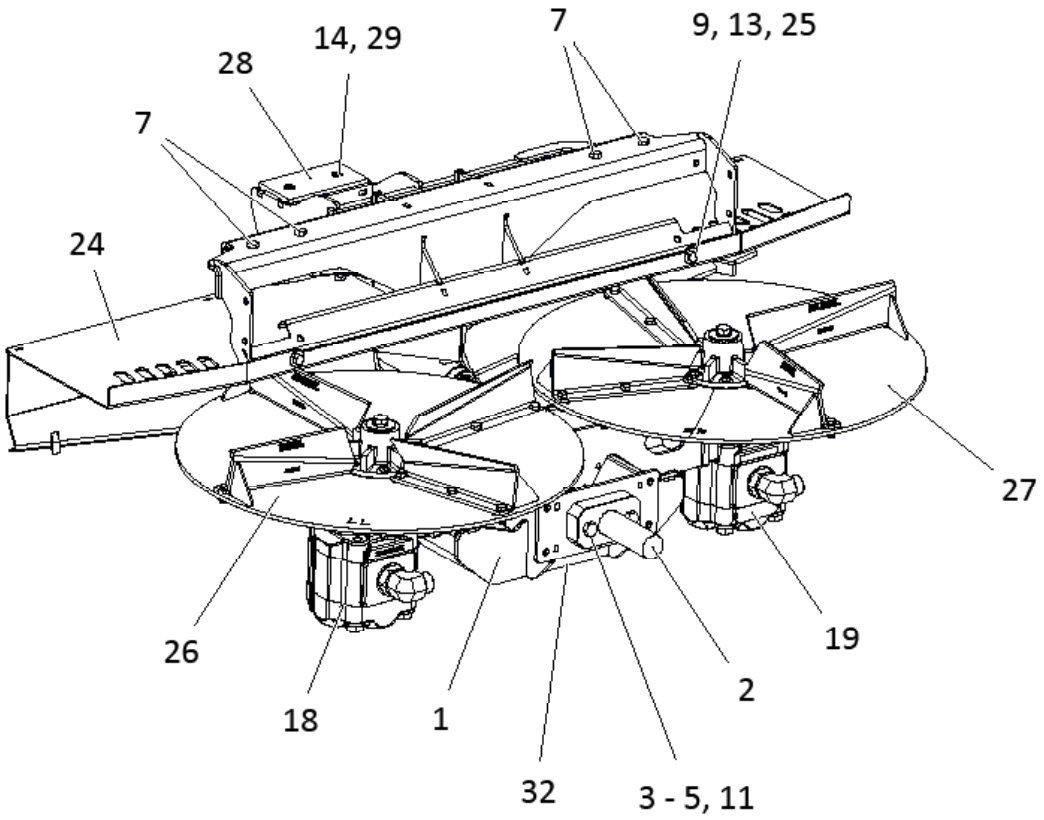

ITEM	PART NO.	DESCRIPTION	QTY
1	313112	Frame - Wldmt Spinner 304	1
2	313140	Mount - Wldmt Motor 304	1
3	313174	Guide - Assy Rod	4
4	313177	Plate - Backing 304	4
5	313178	Cap Screw - 1/2-13NC x 3-1/4 SS	4
6	36402	Cap Screw - 1/2-13NC x 1-1/4 SS	8
7	36293	Cap Screw - 3/8-16NC x 3/4 SS	6
8	313179	Cap Screw - 3 Full Thread SS	1
9	36398	Cap Screw - 3/8-16NC x 1 SS	14
10	36401	Cap Screw - 1/2-13NC x 1 SS	2
11	39016	Nut - Lock 1/2-13NC SS	4
12	36416	Nut - Hex 1/2-13NC SS	1
13	72054	Nut - Lock 3/8-16NC SS	18

AR - As Required

Spinner Assembly Cont.

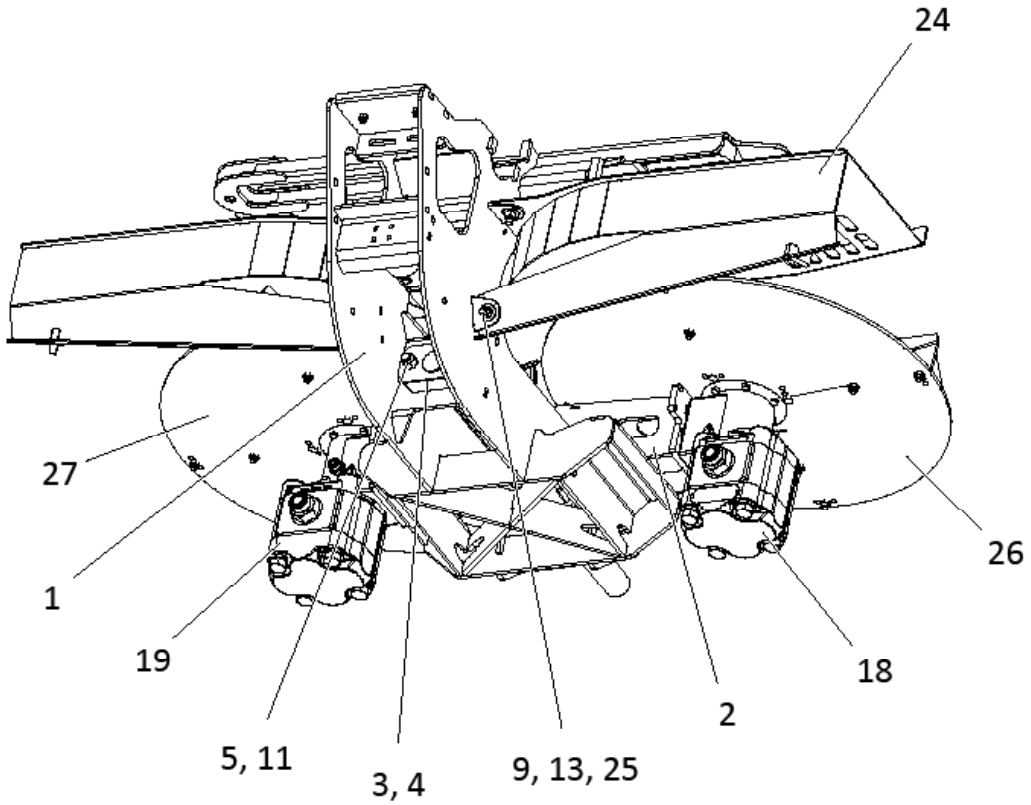

ITEM	PART NO.	DESCRIPTION	QTY
14	42034	Nut - Lock 1/4-20NC SS	2
15	312951	Cylinder - 1.5 x 4.75 w/ Sensor	1
16	313173	Pin - Clevis	2
17	36427	Pin - Cotter	1
18	313181	Motor - Spinner Assy LH, Includes Items	1
19	313182	Motor - Spinner Assy RH, Includes Items	1
20	305571	Washer - Rubber	2
21	36422	Washer - Lock 1/2 SS	10
22	313148	Mount - Wldmt Bearing Lower 304	1
23	313169	Bearing - Lower	1
24	313151	Shroud - Wldmt Disc 304	1
25	36425	Washer - Flat 3/8 SS	8

AR - As Required

Spinner Assembly Cont.

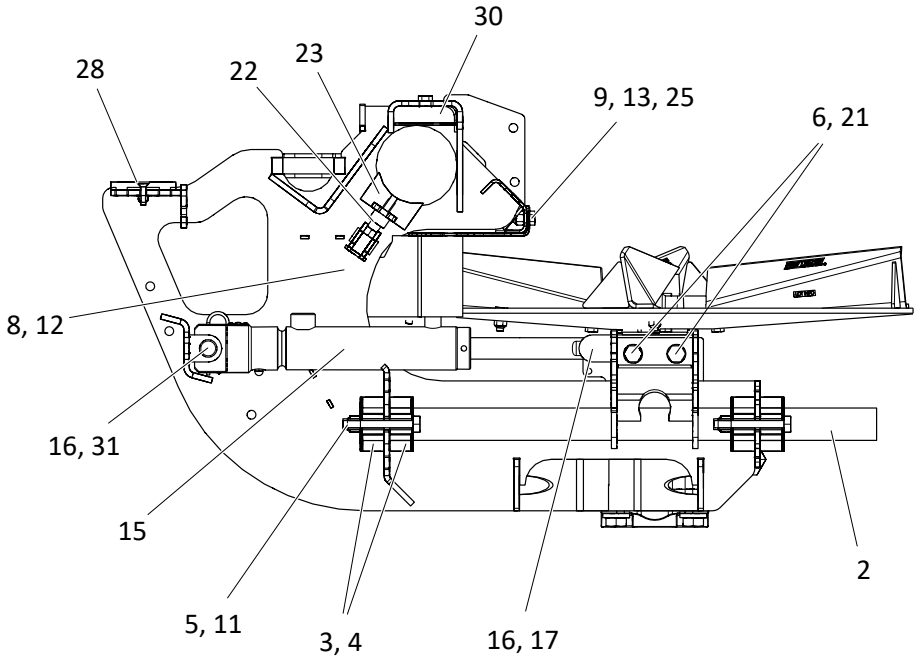

ITEM	PART NO.	DESCRIPTION	QTY
26	87106	Disc - Assy LH 7ga, Includes Items 36 - 42	1
	87105-X2	Disc - Assy LH 1/4", Includes Items 36 - 42	1
27	87105	Disc - Assy RH 7ga, Includes Items 38 - 44	1
	87105-X2	Disc - Assy RH 1/4", Includes Items 38 - 44	1
28	313170	Bearing - Front	1
29	47268	Screw - Flat Head 1/4-20NC x 1 SS	2
30	313171	Bearing - Assy Upper	2
31	36429	Pin - Hair	1
32	314775	Decal - US Patent No. 9,649,646	1
33	301315	Washer - 9/16 x 14ga (1/4" Discs only)	2
34	27056-X5	Disc - Distributor LH	1
	57830-X3	Disc - Distributor LH 1/4"	1
35	309092	Fin - Wldmt LH	4
36	10877	Hub - Wldmt	2
37	20004	Cap Screw - 1/4-20NC x 7/8	6
38	20676	Nut - Lock 1/4-20NC	6
39	20034	Cap Screw - 5/16-18NC x 3/4	12
	20035	Cap Screw - 5/16-18NC x 7/8 (1/4" Discs)	12
40	20677	Nut - Lock 5/16-18NC	12

AR - As Required

Spinner Assembly Cont.

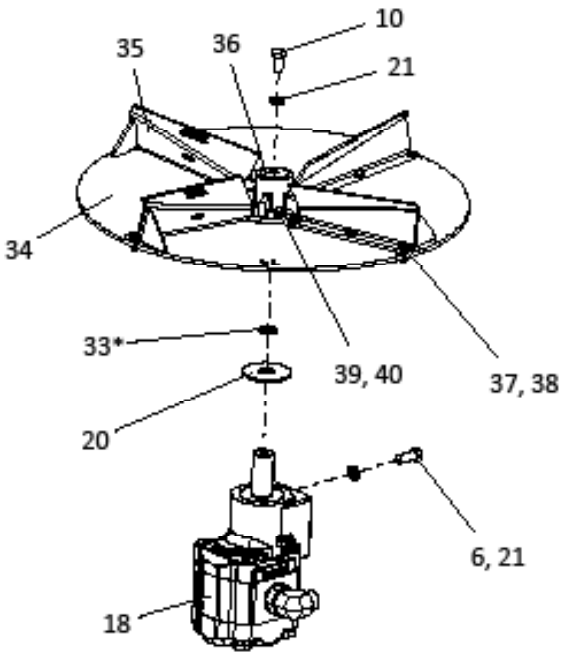

LEFT HAND

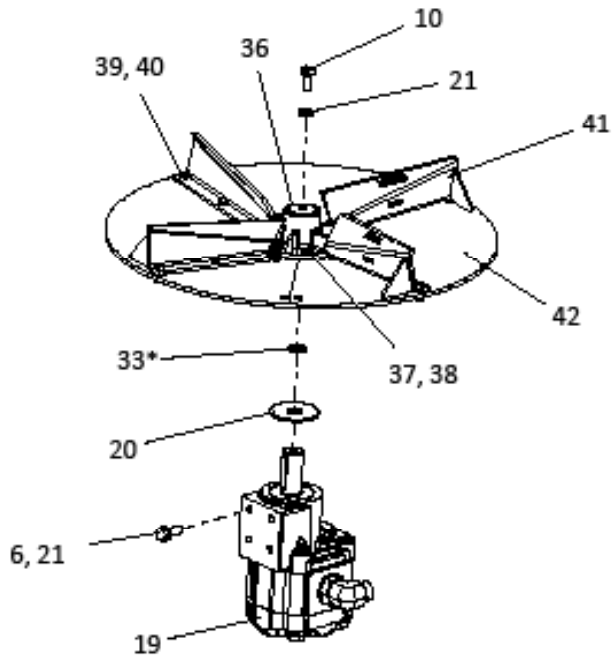

RIGHT HAND

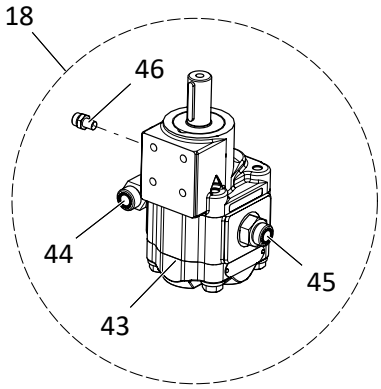

LEFT HAND

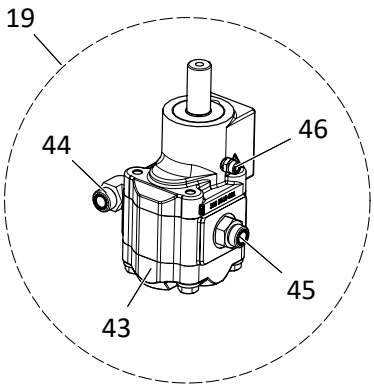

RIGHT HAND

ITEM	PART NO.	DESCRIPTION	QTY
41	309091	Fin - Wldmt RH	4
42	27056-X4 57830-X2	Disc - Distributor RH Disc - Distributor RH 1/4"	1 1
43	313512	Motor - Spinner 5.1 CID	2
44	313183	Fitting - 12-16 520220	2
45	313184	Fitting - 12-16 520120	2
46	313185	Fitting - 6-4 Non-Standard	2

AR - As Required

MultApplier

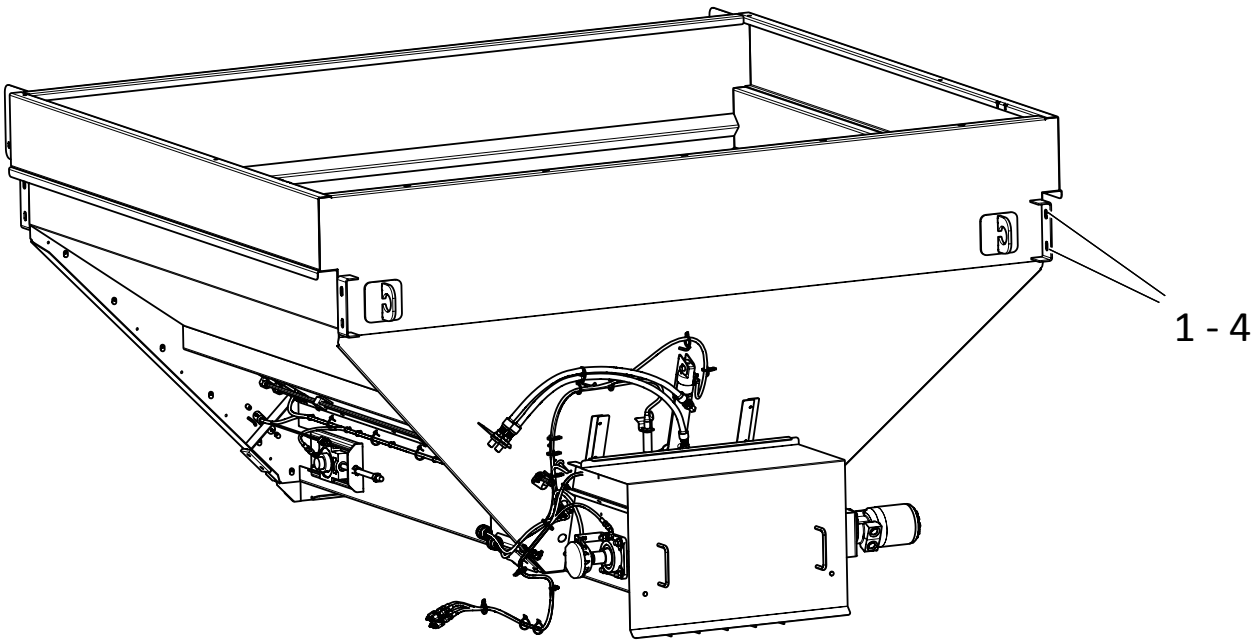

MultApplier

ITEM	PART NO.	DESCRIPTION	QTY
1	20128-X1	Cap Screw - 1/2-13NC x 1-1/4 GR8	8
2	20695	Washer - Flat 1/2 ZN	16
3	20714	Washer - Lock 1/2 ZN	8
4	20646	Nut - Hex 1/2-13NC ZN	8

Rear Feedgate

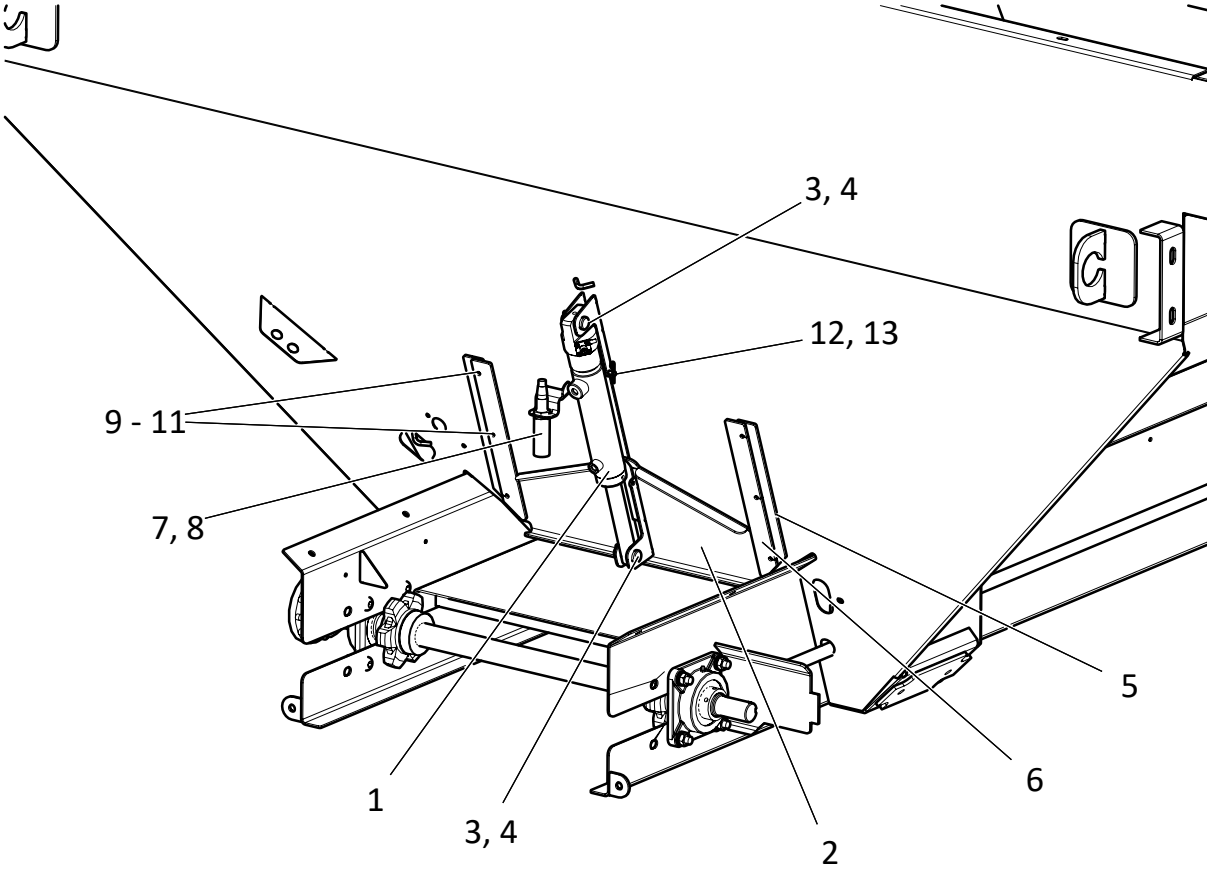

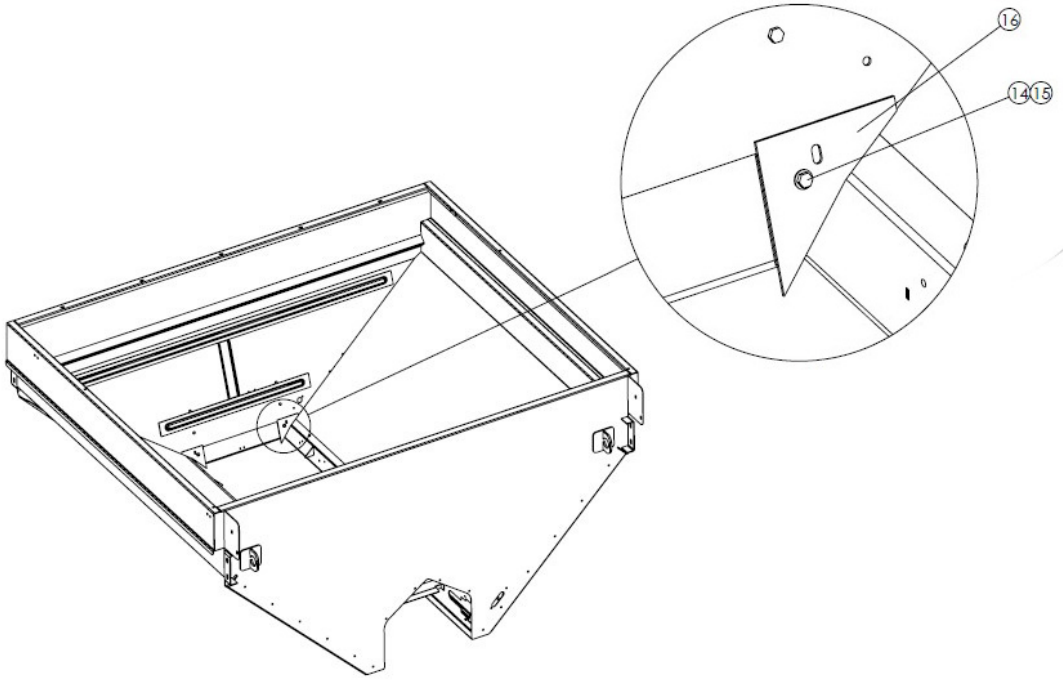

ITEM	PART NO.	DESCRIPTION	QTY
1	312951	Cylinder - 1.5 x 4.75 w/ Sensor	1
2	313265	Feedgate - Wldmt 304	1
3	313173	Pin - Clevis	2
4	36427	Pin - Cotter	2
5	313375	Bar - Feedgate Guide 304	2
6	313376	Bar - Feedgate Slide 304	2
7	313377	Sensor - Ultrasonic	1
8	313378	Cover - Sensor	1
9	36394	Cap Screw - 1/4-20NC x 7/8 SS	6
10	36418	Washer - Lock 1/4 SS	6
11	36412	Nut - Hex 1/4-20NC SS	6
12	98476	Pin - Clevis	1
13	41779	Pin - Hair	1
14	36395	Capscrew - .25-20NC x 1 SS	2
15	36423	Washer - Flat .25 SS	2
16	306558	Sealer - Feedgate Bolt-In 304	2

Hillside Divider & Conveyor Cover

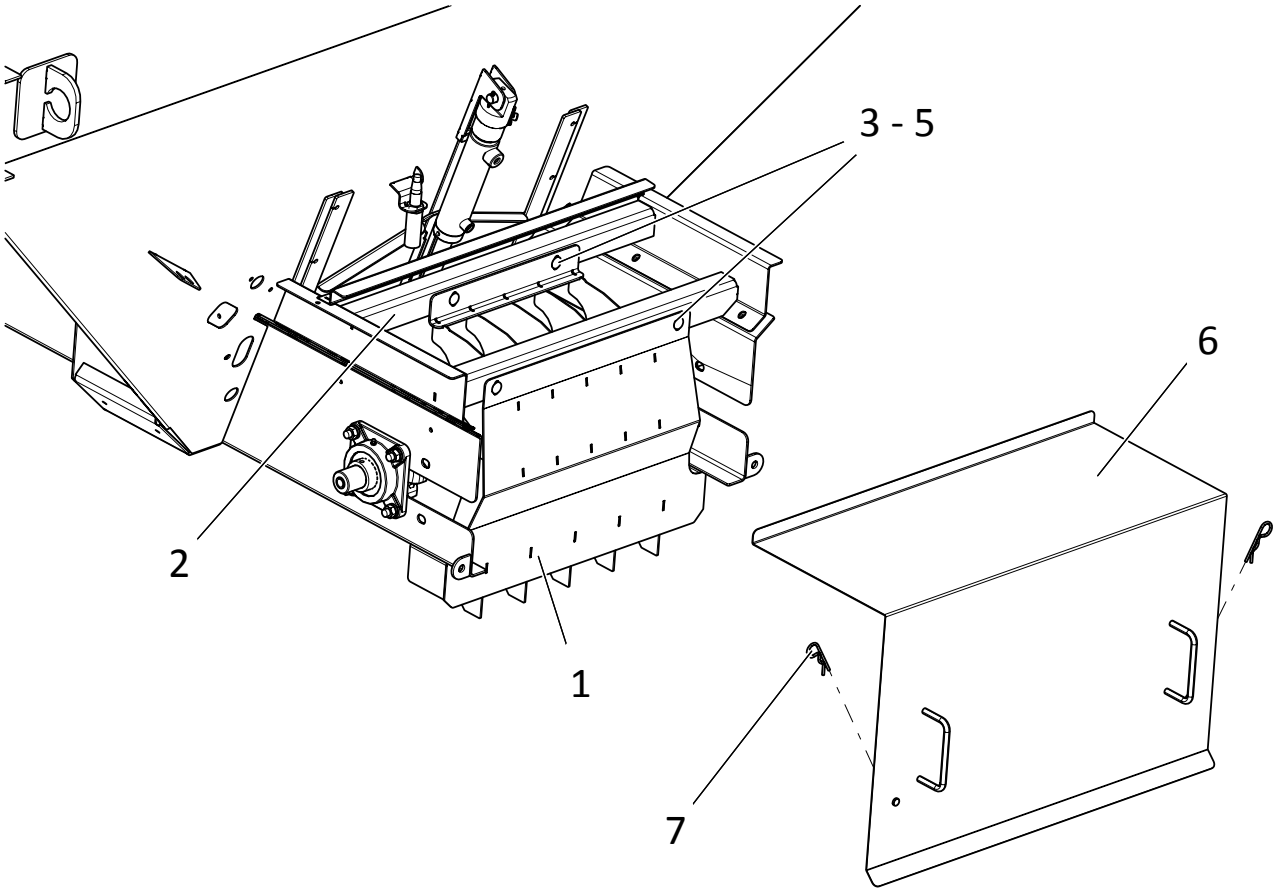

ITEM	PART NO.	DESCRIPTION	QTY
1	313236	Hillside Divider Wldmt 304	1
2	313246	Support - Hillside Divider Wldmt 304	1
3	36408	Bolt - Carriage 3/8-16NC x 1 SS	4
4	36425	Washer - Flat 3/8 SS	4
5	72054	Nut - Lock 3/8-16NC SS	4
6	313249	Cover - Wldmt Rear 304	1
7	36429	Pin - Hair	2

MultApplier

Front Feedgate

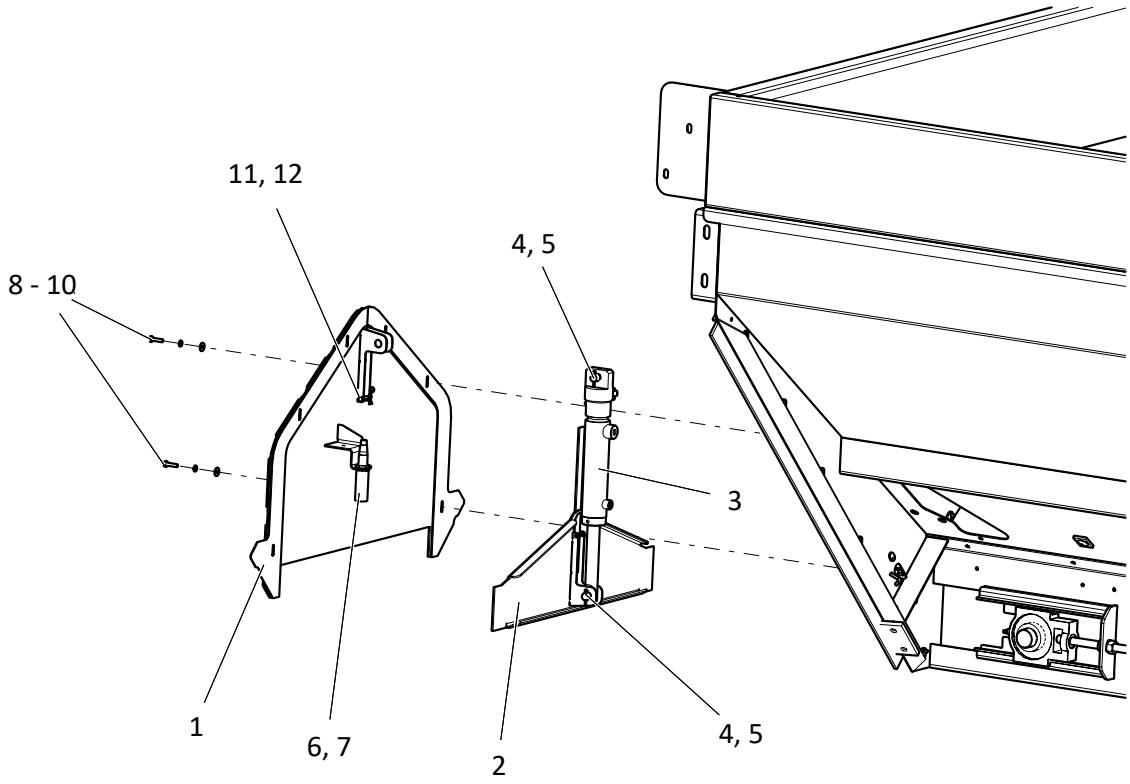

ITEM	PART NO.	DESCRIPTION	QTY
	313254	Feedgate - Assy Front, Includes Items 1 - 7	1
1	313255	Insert - Wldmt Feedgate Front 304	1
2	313262	Feedgate - Wldmt 304	1
3	312951	Cylinder - 1.5 x 4.75 w/ Sensor	1
4	313173	Pin - Clevis	2
5	36427	Pin - Cotter	2
6	313377	Sensor - Ultrasonic	1
7	313378	Cover - Sensor	1
8	36395	Cap Screw - 1/4-20NC x 1 SS	6
9	36423	Washer - Flat 1/4 SS	6
10	36418	Washer - Lock 1/4 SS	6
11	98476	Pin - Clevis	1
12	41779	Pin - Hair	1

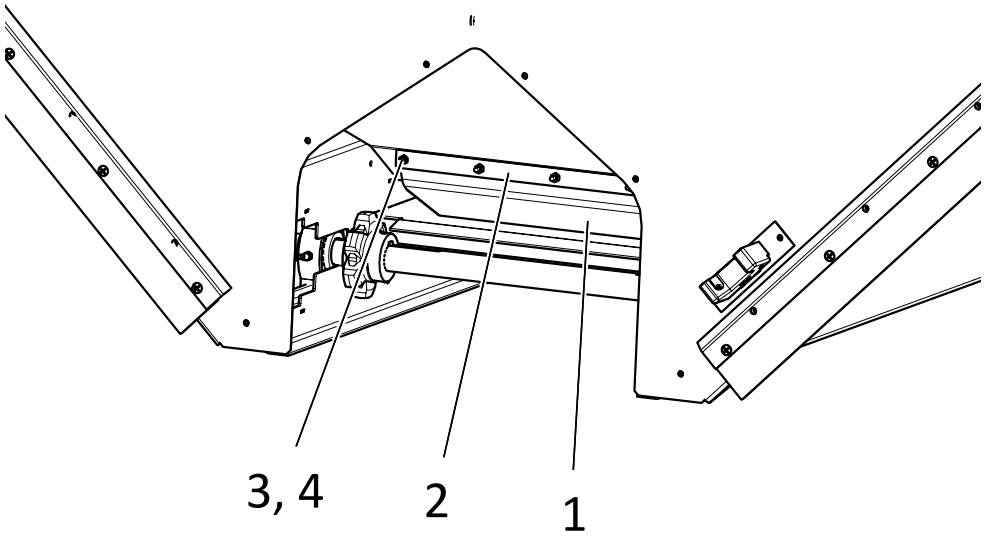

ITEM	PART NO.	DESCRIPTION	QTY
	86894	Wiper - Group Front, Includes Items 1 - 4	1
1	39426	Wiper – Belt Front	1
2	54230	Retainer – Wiper	1
3	42033	Screw – Machine 1/4-20NC x 1	5
4	36412	Nut – Hex 1/4-20NC	5

Sealers

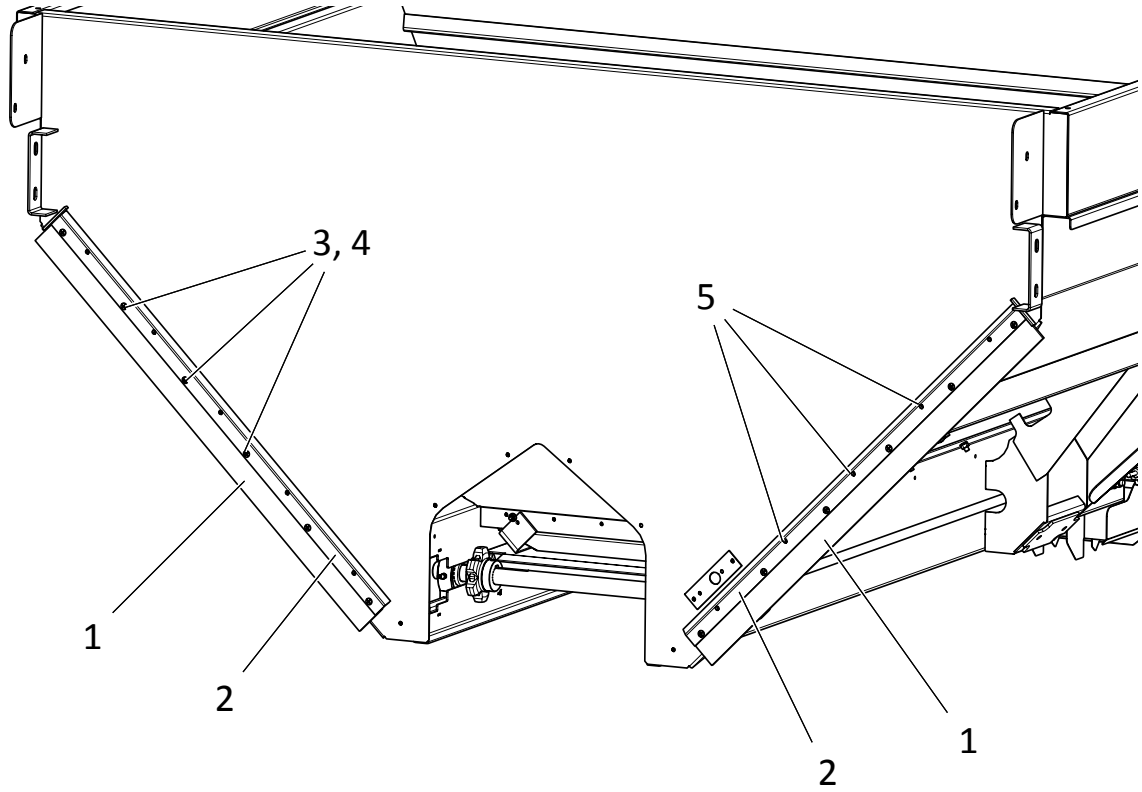

ITEM	PART NO.	DESCRIPTION	QTY
	313408	Sealer - Group Front, Includes Items 1 - 5	1
	306637	Seal- Assy 304, Includes Items 1- 4	2
1	306582	Seal- Belting Pre-Cut	2
2	306581	Retainer- Seal 304	2
3	56258	Screw- Truss Head 1/4-20NC x 1/2 SS	12
4	88931	Nut - Tee 1/4-20NC x 1/4	12
5	36395	Cap Screw - 1/4-20NC x 1 SS	10

#4 Belt-Over-Chain Conveyor

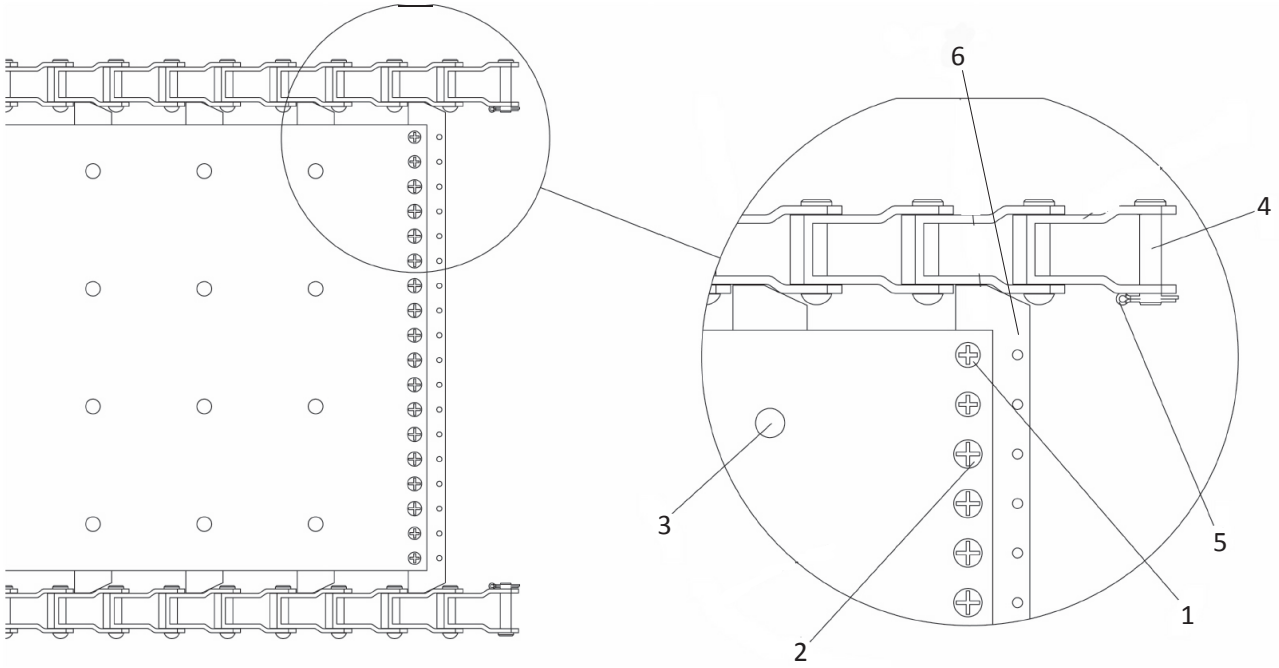

ITEM	PART NO.	DESCRIPTION	QTY
	308712-AA 308712-AC	Chain Wldmt - 5' Unit, Includes Items 1 - 6 Chain Wldmt - 7' Unit, Includes Items 1 - 6	1 1
1	20617	Screw - Flat 1/4-20NC x 1/2	8
2	20624	Screw - Truss Head 1/4-20NC x 1/2	28
3	308534	Screw - 1/4 x 1/2-20NC	AR
4	21118	Pin - Chain Pintle	2
5	20817	Pin - Cotter	2
6	70473	Bar - Splicer	1

Chain Shields

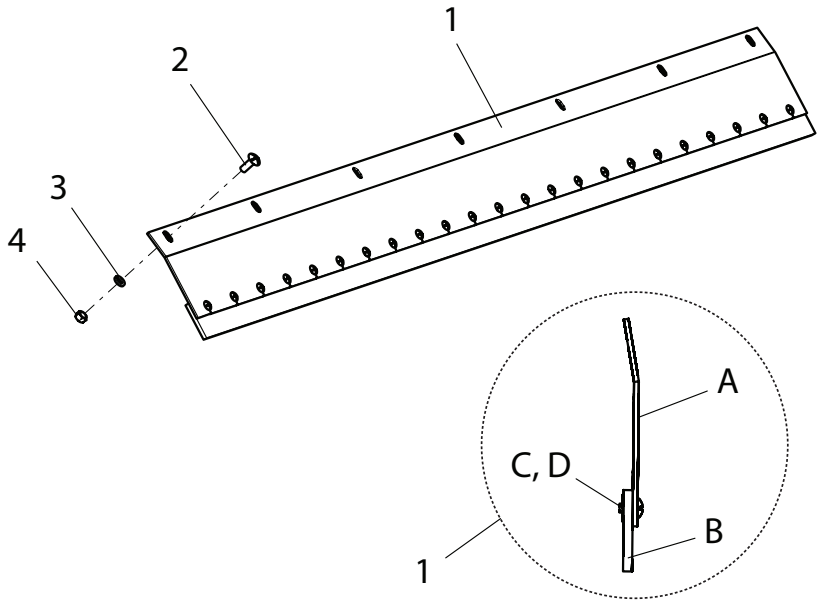

ITEM	PART NO.	DESCRIPTION	QTY
1	86876	Shield – Chain Assy - 5' Unit	2
	303977	Shield – Chain Assy - 7' Unit	2
A	86798	Shield – Chain - 5' Unit	2
	303978	Shield – Chain - 7' Unit	2
B	305975	Belting – Sealer, specify length	AR
C	56258	Screw – Truss Head 1/4-20 x 1/2	AR
D	88931	Nut – Tee 1/4 x 1/4	AR
2	71829	Screw – Machine 3/8-16 x 1 SS	AR
3	36420	Washer – Lock 3/8 SS	AR
4	36414	Nut – Hex 3/8-16 SS	AR

AR – As Required

Conveyor Idler

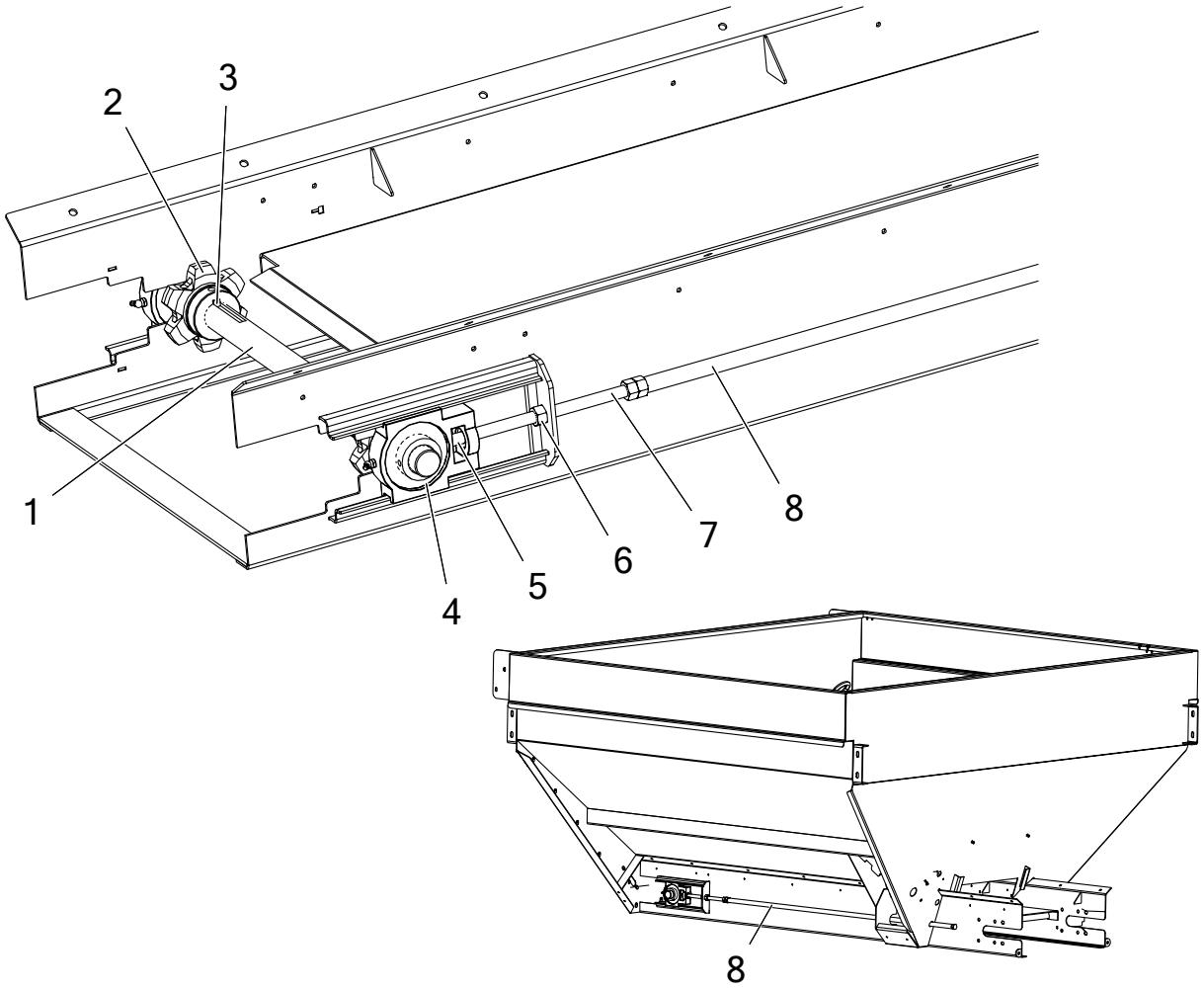

ITEM	PART NO.	DESCRIPTION	QTY
	89780	Shaft - Idler Assy, Includes 1-5	
1	89779	Shaft - Idler	1
2	86757 20743	Sprocket Screw - Set 5/16-18NC x 3/8	2 4
3	6131	Key - Square	2
4	22511	Bearing	2
5	17078	Collar - Set	2
6	87856	Nut Wldmt 304	2
7	87857	Bolt Wldmt	2
8	306974 306595	Extended Idler - Pipe Wldmt Adj 5' Unit 304 Extended Idler - Pipe Wldmt Adj 7' Unit 304	2 2

* - Not Shown

Conveyor Drive & Encoder

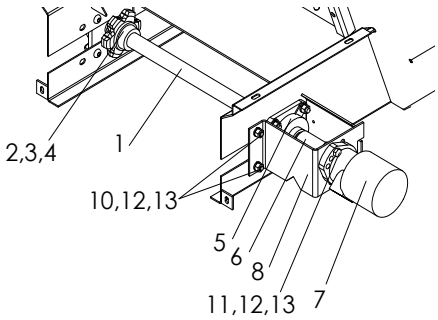

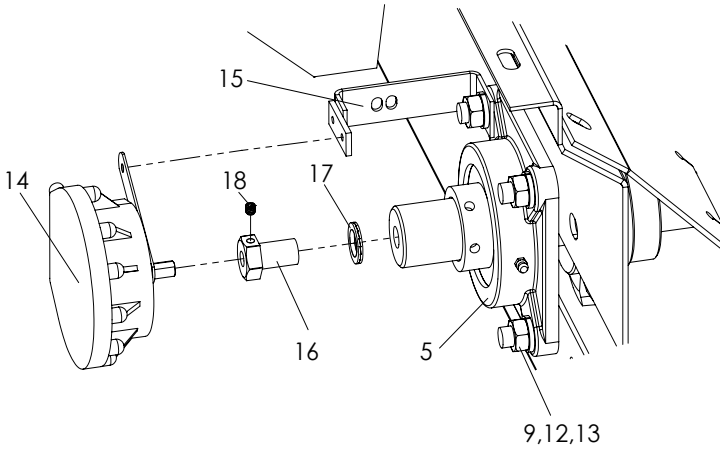

ITEM	PART NO.	DESCRIPTION	QTY
	86759-X1	Shaft - Drive Assy, Includes Items 1-5	
1	310644	Shaft - Drive	1
2	86757	Sprocket	2
3	6131	Key - Square	2
4	20743	Screw - Set	4
5	6697	Bearing	2
6	86762 *4059	Coupling - Shaft Key - Square 5/16 x 1-1/2	1 1
7	311056 *56327	Motor - Hydraulic 29.1 CID Seal Kit	1 1
8	86766	Mount - Motor	1
9	304484	Screw - Button Head 1/2-13NC x 1-1/2 SS	8
10	72056	Bolt - Carriage 1/2-13NC x 1 SS	2
11	36539	Cap Screw - 1/2-13NC x 1-1/2 SS	2
12	36422	Washer - Lock 1/2 SS	12
13	36416	Nut - Hex 1/2-13NC SS	12
14	303994	Encoder - Conveyor 180	1
15	304953-X1	Bracket - Encoder	1
16	310601	Coupler - Rate Sensor	1
17	310602	Washer - Special Lock	1
18	310603	Screw - Set 1/4-20NC x 5/16 SS	1

* - Not Shown

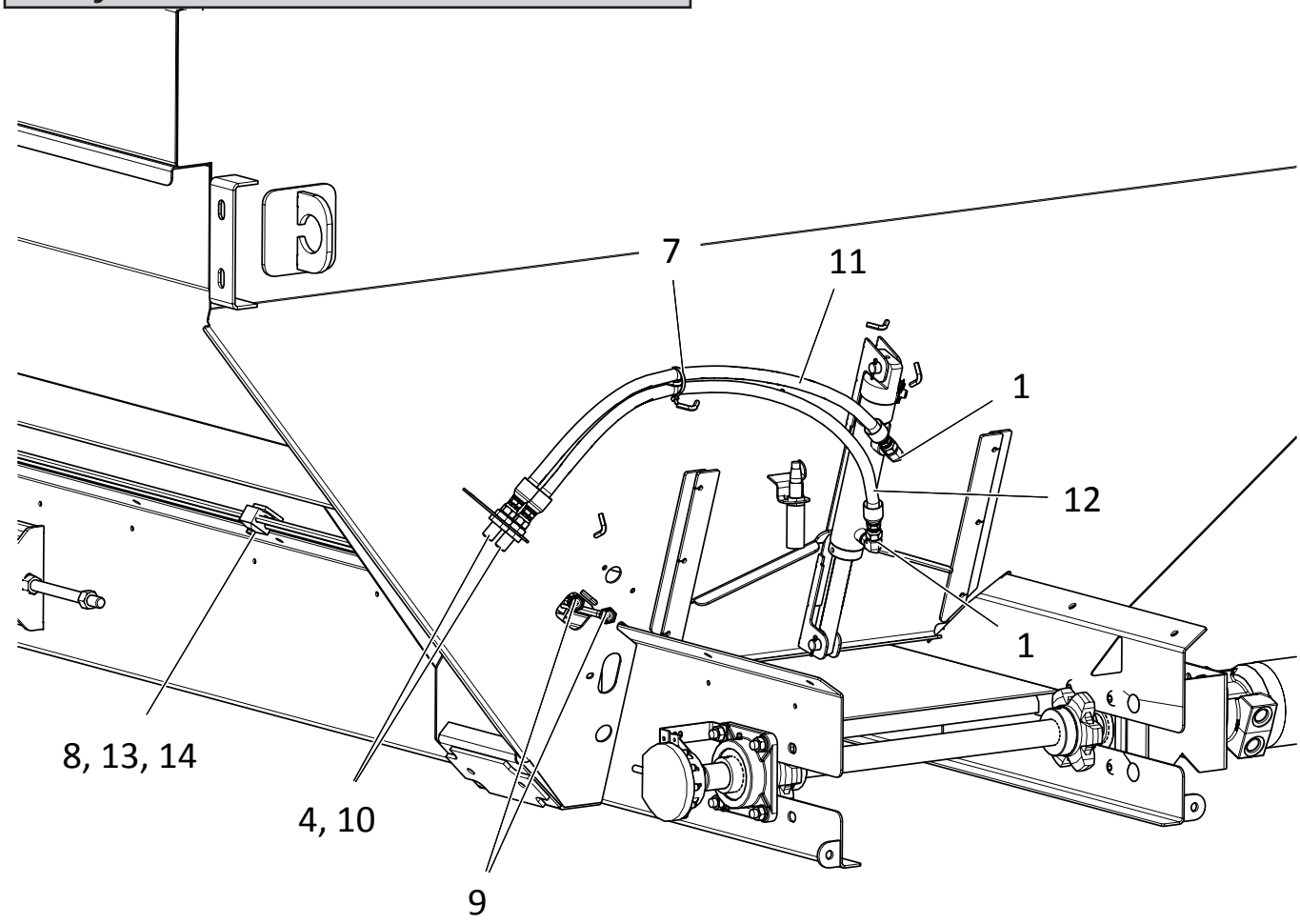

ITEM	PART NO.	DESCRIPTION	QTY
1	313465	Fitting - 6-4 520220	4
2	313468	Fitting - 6-6 520701	2
3	313467	Fitting - 6 520118	2
4	313485	Fitting - 6 520118 304	2
5	313549	Hose - Assy SAE 6 x 23 100R1	1

MultApplier

Hydraulics Cont.

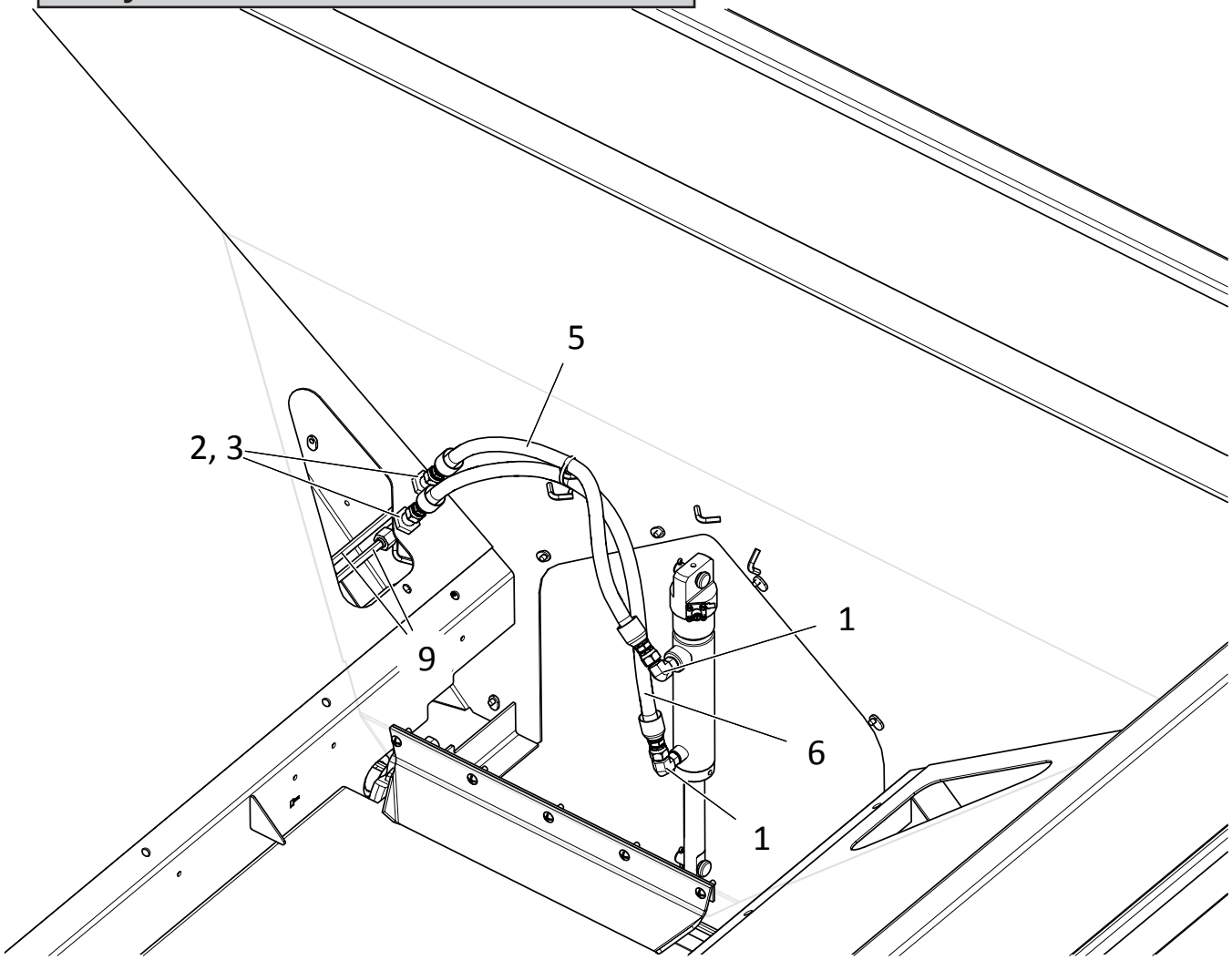

ITEM	PART NO.	DESCRIPTION	QTY
6	313550	Hose - Assy SAE 6 x 24-1/2 100R1	1
7	99674	Tie - Wire	2
8	313385	Clamp - Tubing Twin 3/8	3
9	314428 313337	Tube - Assy 3/8 SS 5' MultApplier Tube - Assy 3/8 SS 7' MultApplier	2 2
10	313486	Fitting - 6-6 520601 304	2
11	313543	Hose - Assy SAE 6 x 30 100R1	1
12	313544	Hose - Assy SAE 6 x 32-1/2 100R1	1
13	36418	Washer - Lock 1/4	3
14	40750	Cap Screw - 1/4-20NC x 1-1/4 SS	3

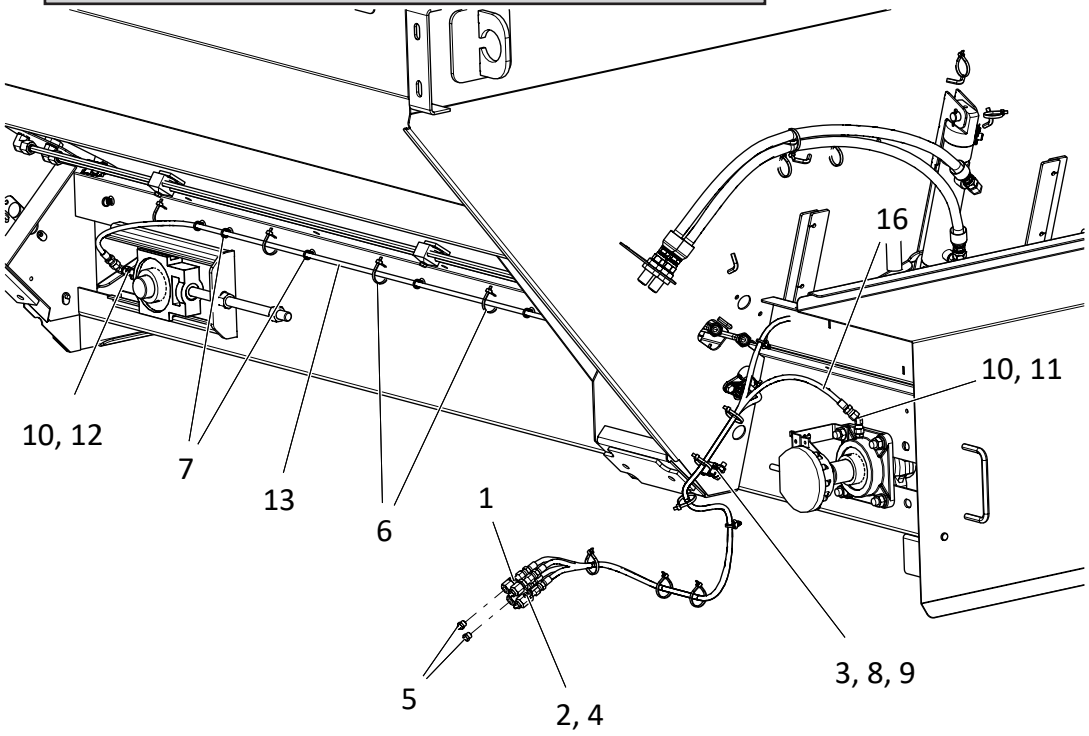
16
10, 11
10, 12
7
13
6
1
5
2, 4
3, 8, 9

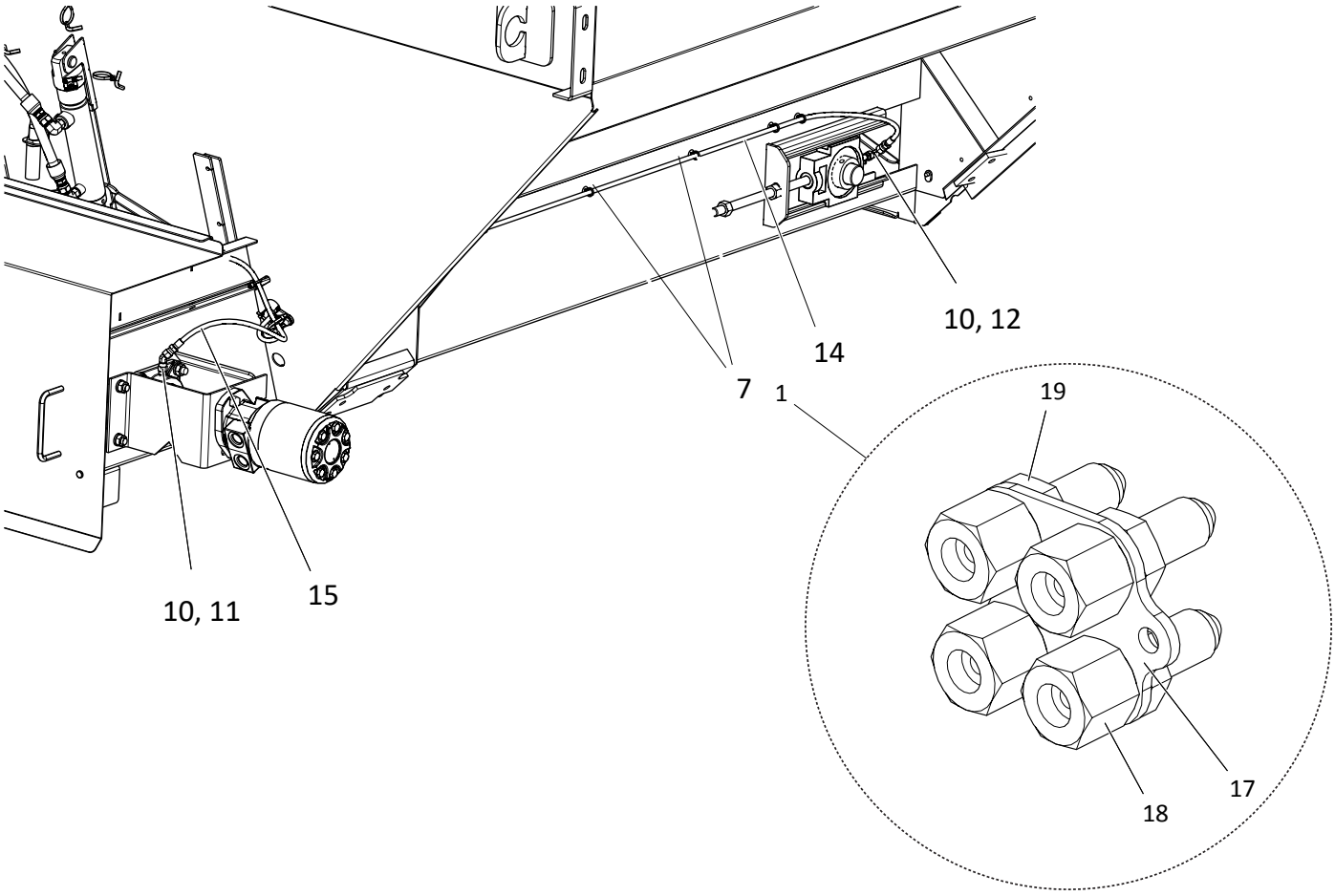
10, 12
14
7
1
19
10, 11
15
18
17

MultApplier

Lubrication Cont.

ITEM	PART NO.	DESCRIPTION	QTY
1	313915	Lube Bank - Assy 4 Position, Includes Items 17 - 19	1
2	44454	Screw - Socket Head @10-24NC x 1 SS	2
3	42221	Nut - Lock 5/16-18NC SS	3
4	56355	Nut - Lock #10-24NC SS	2
5	313917	Zerk - Grease 1/8-27 NPT SS	4
6	99674	Tie - Wire	9
7	311806	Tie - Wire Fir Tree	19
8	312964	Clip - Harness Mounting	3
9	34580	Cap Screw - 5/16-18NC x 1 SS	3
10	34787	Fitting - 4-2 070102	4
11	313501	Fitting - 4-4 070321	2
12	34868	Fitting - 4-4 070221	2
13	314430 313667	Hose - Assy LH Idler Bearing 5' MultApplier Hose - Assy LH Idler Bearing 7' MultApplier	1 1
14	314431 313668	Hose - Assy RH Idler Bearing 5' MultApplier Hose - Assy RH Idler Bearing 7' MultApplier	1 1
15	313669	Hose - Assy LH Drive Bearing	1
16	313670	Hose - Assy RH Drive Bearing	1
17	313912	Plate - Lube Bank 4 Position	1
18	313916	Fitting - 4-2 Non-Standard Bulkhead	4
19	311489	Fitting - 4 070118 Nut	4

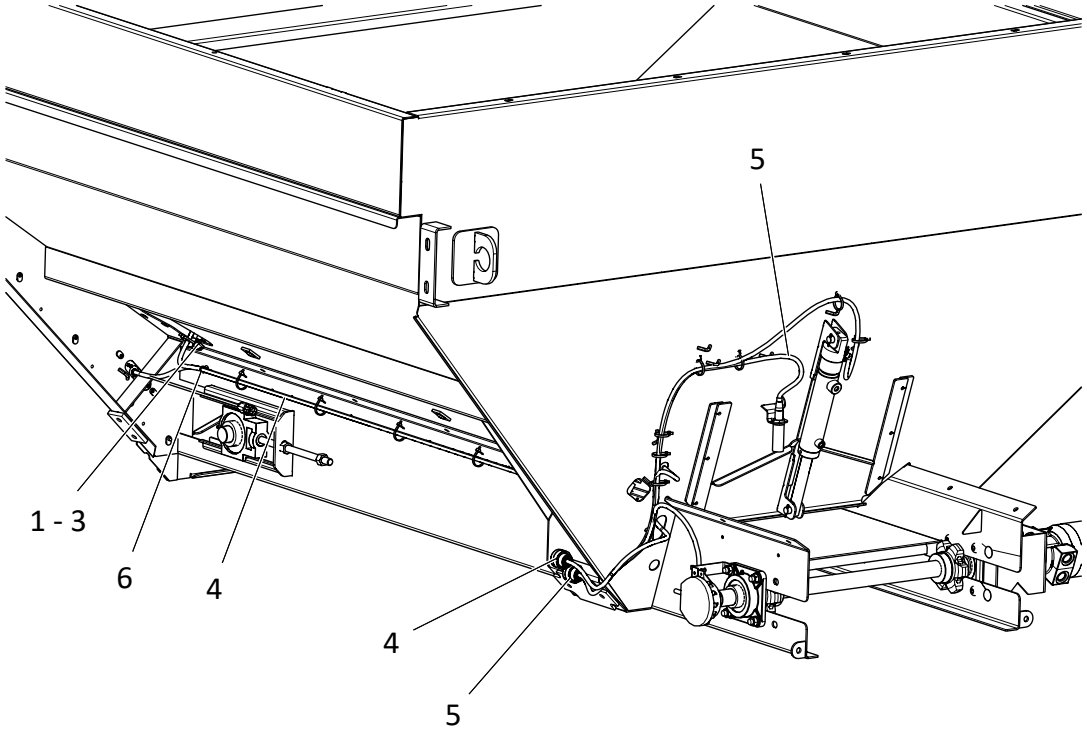

ITEM	PART NO.	DESCRIPTION	QTY
1	312964	Clip - Harness Mounting	1
2	34580	Cap Screw - 5/16-18NC x 1 SS	1
3	42221	Nut - Lock 5/16-18NC SS	1
4	99674	Tie - Wire	18
5	313998	Harness - Bin 1 Insert Control	1
6	313999	Harness - Bin 2 Insert Control	1
7	311806	Tie - Wire Fir Tree	2

MultApplier

Pads

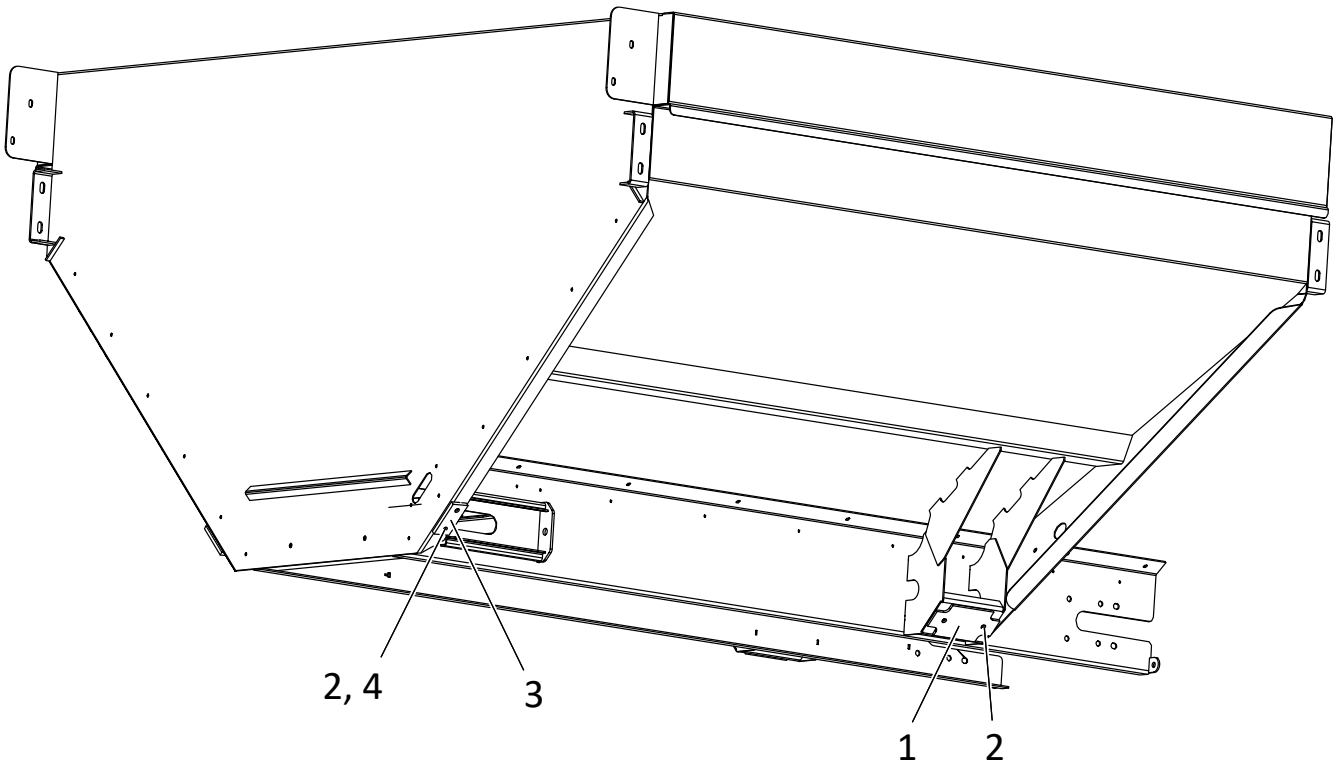

ITEM	PART NO.	DESCRIPTION	QTY
1	306924	Mount - Foot Pad	2
2	47268	Screw - Flathead 1/4-20 x 1 SS	8
3	307097	Mount - Pad	2
4	42034	Nut - Lock 1/4-20 SS	4

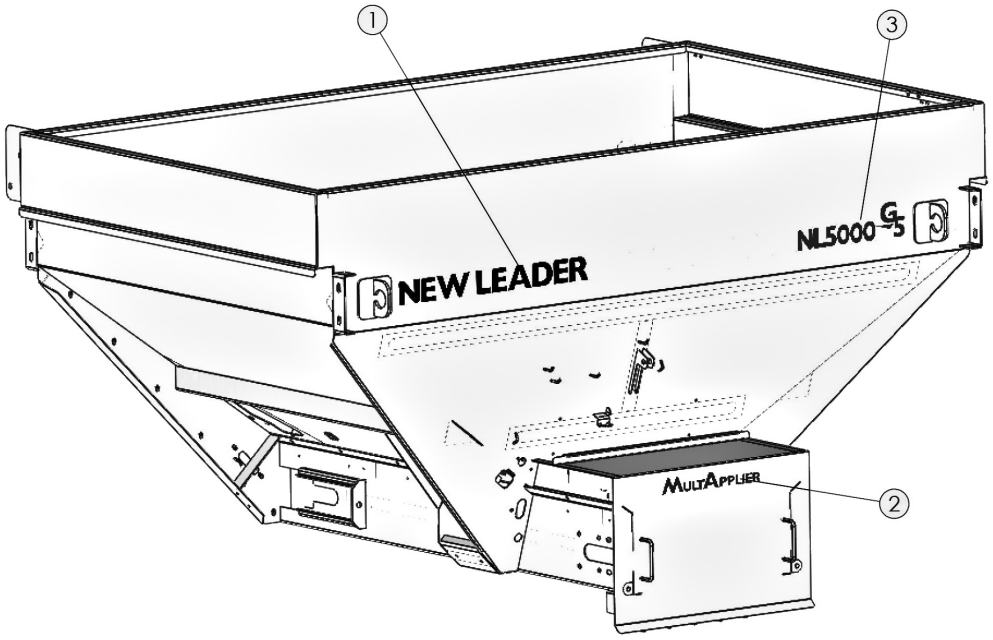

NOTE: See "Decals" in Safety section for details.

ITEM	PART NO.	DESCRIPTION	QTY
1	312561	Decal - New Leader Black	1
2	312591	Decal - MultApplier, Black	1
3	316502	Decal - NL5000 Black	1

This page is intentionally left blank.

MultiBin

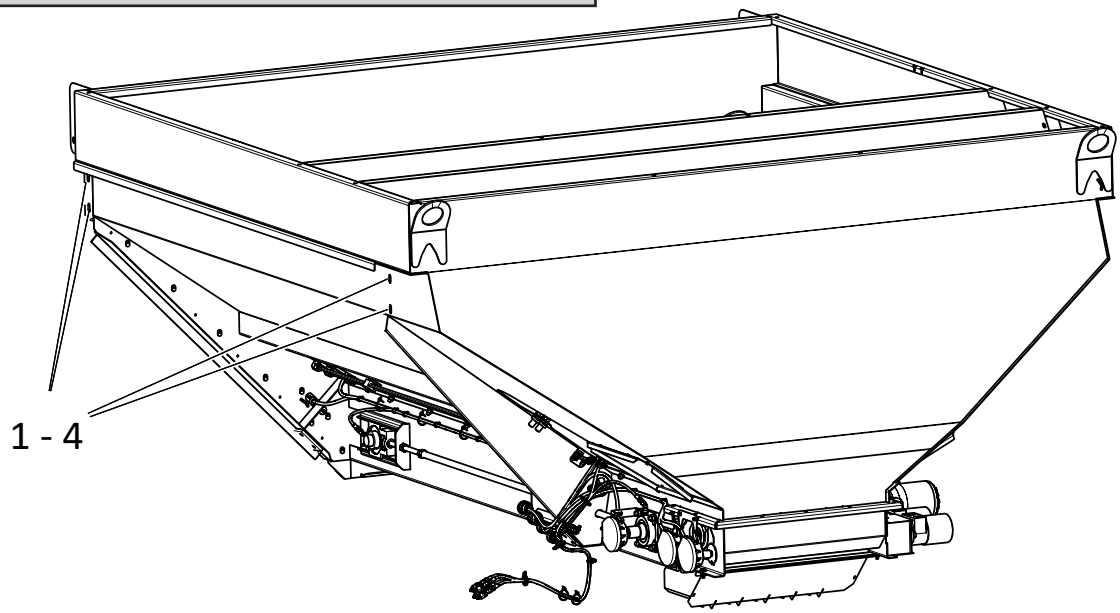

ITEM	PART NO.	DESCRIPTION	QTY
1	20129-X1	Cap Screw - 1/2-13NC x 1-1/2 GR8	8
2	20695	Washer - Flat 1/2 ZN	16
3	20714	Washer - Lock 1/2 ZN	8
4	20646	Nut - Hex 1/2-13NC ZN	8

Rear Feedgate

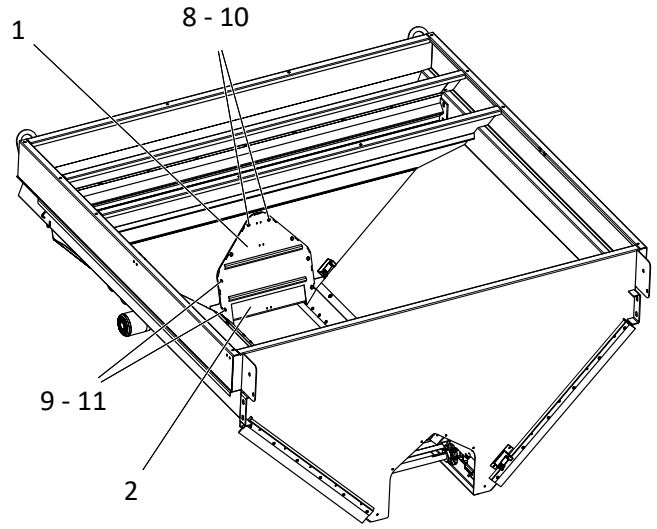

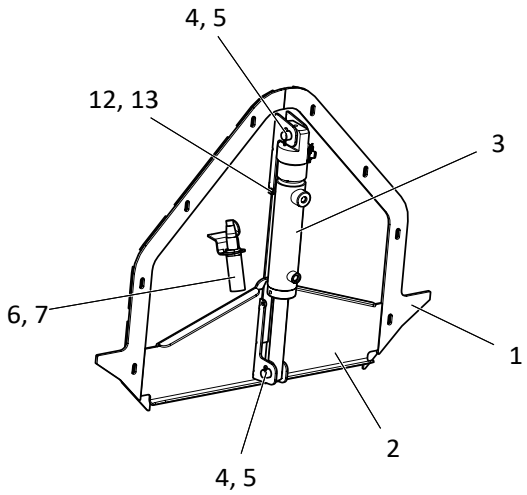

ITEM	PART NO.	DESCRIPTION	QTY
	313435	Feedgate - Assy Rear, Includes Items 1 - 7	1
1	313436	Insert - Wldmt Feedgate Rear 304	1
2	313265	Feedgate - Wldmt 304	1
3	312951	Cylinder - 1.5 x 4.75 w/ Sensor	1
4	313173	Pin - Clevis	2
5	36427	Pin - Cotter	2
6	313377	Sensor - Ultrasonic	1
7	313378	Cover - Sensor	1
8	36418	Washer - Lock 1/4 SS	2
9	36423	Washer - Flat 1/4 SS	14
10	36395	Cap Screw - 1/4-20NC x 1 SS	8
11	42034	Nut - Lock 1/4-20NC SS	2
12	98476	Pin - Clevis	1
13	41779	Pin - Hair	1

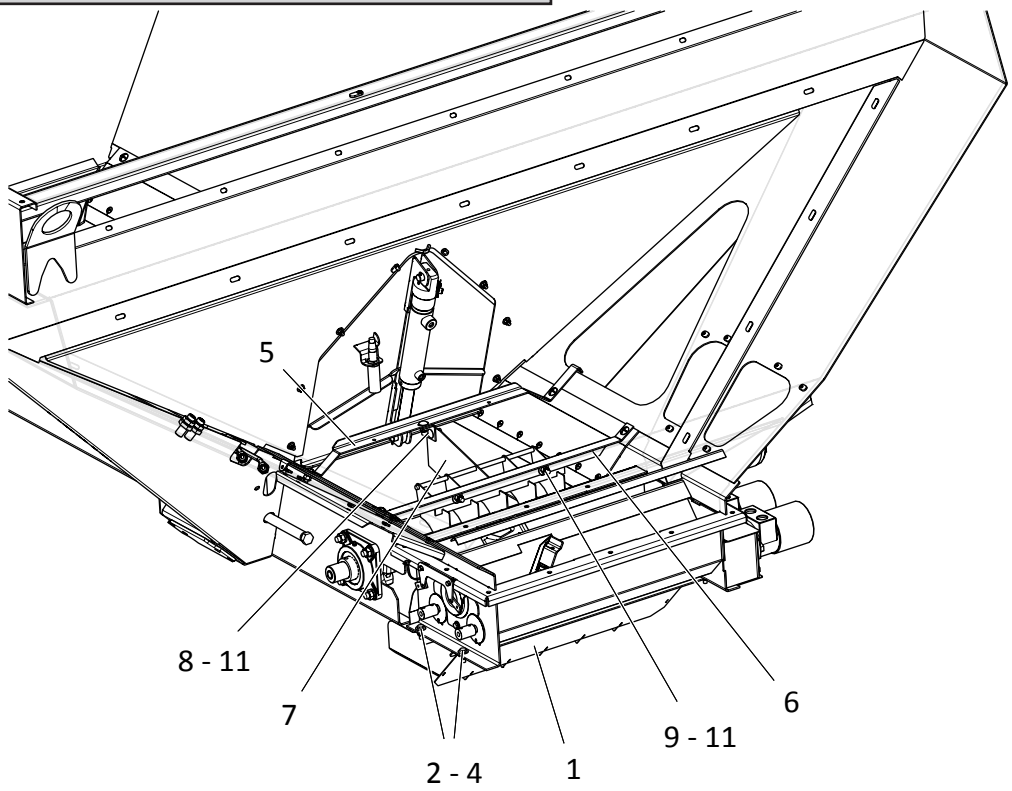

NOTE: MICROBIN PANELS GHOSTED FOR CLARITY.

ITEM	PART NO.	DESCRIPTION	QTY
	313302	Divider - Group Hillside 304, Includes Items 1 - 11	1
1	313303	Divider - Wldmt Lower 304	1
2	34580	Cap Screw - 5/16-18NC x 1 SS	4
3	36424	Washer - Flat 5/16 SS	8
4	42221	Nut - Lock 5/16-18NC SS	4
5	311928	Support - Divider Front 304	1
6	306577	Support - Divider Rear 304	1
7	306570	Divider - Wldmt Upper 304	1
8	306575	Clamp - Angle 304	1
9	36408	Bolt - Carriage 3/8-16NC x 1 SS	4
10	36425	Washer - Flat 3/8 SS	4
11	72054	Nut - Lock 3/8-16NC SS	4

MultiBin

Front Feedgate

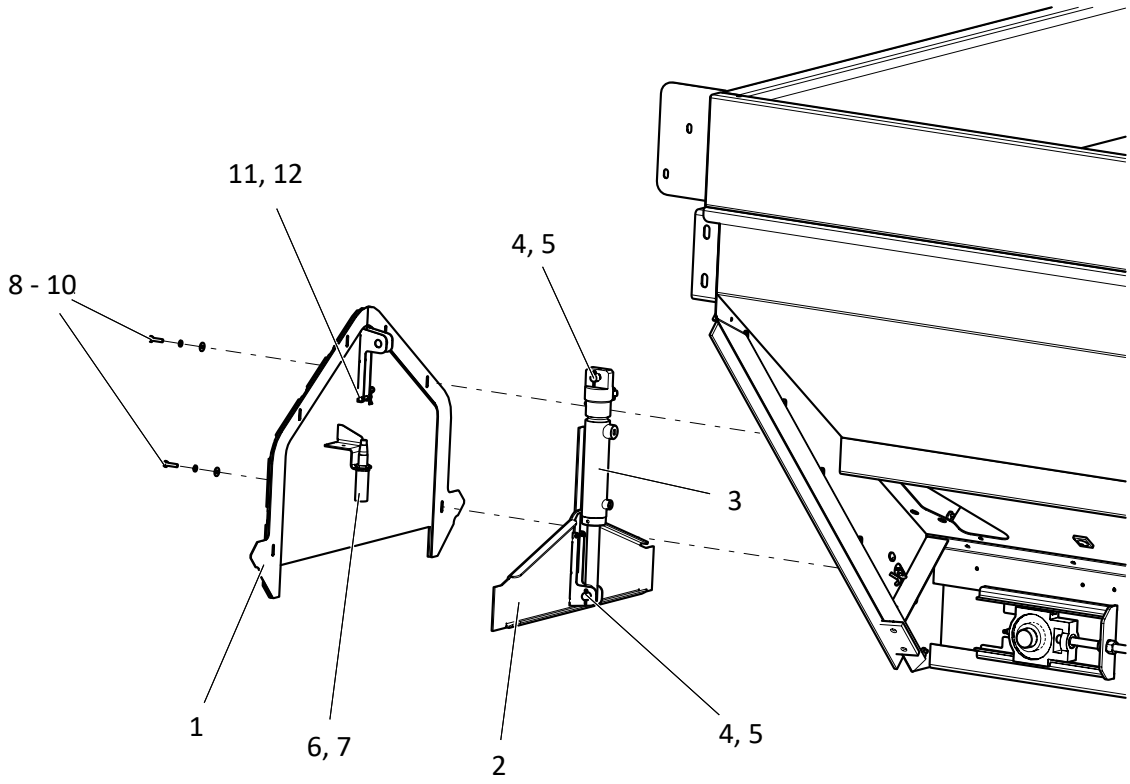

ITEM	PART NO.	DESCRIPTION	QTY
	313254	Feedgate - Assy Front, Includes Items 1 - 7	1
1	313255	Insert - Wldmt Feedgate Front 304	1
2	313262	Feedgate - Wldmt 304	1
3	312951	Cylinder - 1.5 x 4.75 w/ Sensor	1
4	313173	Pin - Clevis	2
5	36427	Pin - Cotter	2
6	313377	Sensor - Ultrasonic	1
7	313378	Cover - Sensor	1
8	36395	Cap Screw - 1/4-20NC x 1 SS	6
9	36423	Washer - Flat 1/4 SS	6
10	36418	Washer - Lock 1/4 SS	6
11	98476	Pin - Clevis	1
12	41779	Pin - Hair	1

MultiBin

Front Wiper

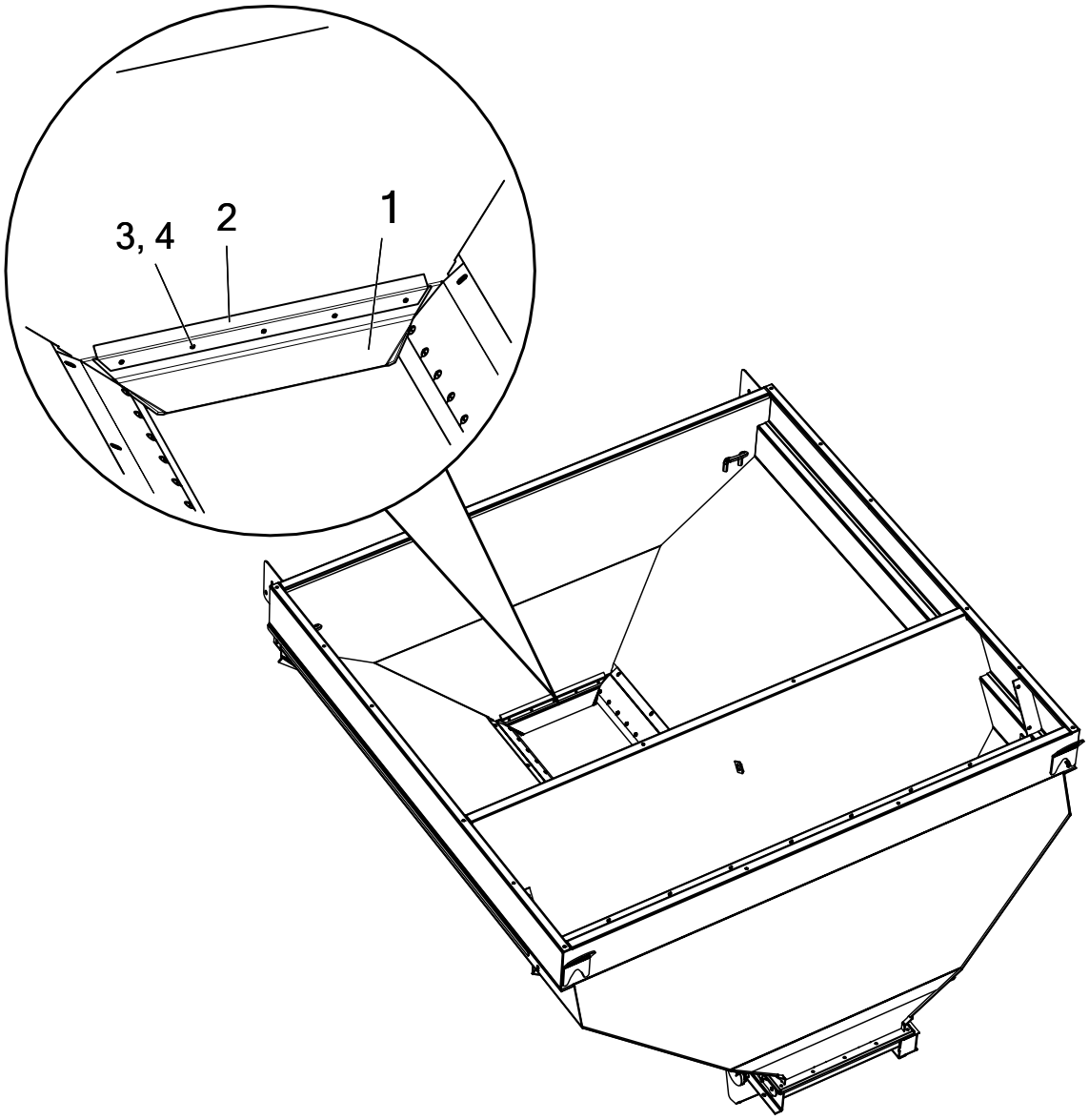

ITEM	PART NO.	DESCRIPTION	QTY
	306544	Wiper - Belt Group Front, Includes Items 1 - 4	1
1	306545	Wiper - Belt Front	1
2	306546	Retainer - Wiper 304	1
3	42033	Screw - Truss Head 1/4 x 1 SS	5
4	36412	Nut - Hex 1/4 SS	5

Sealers

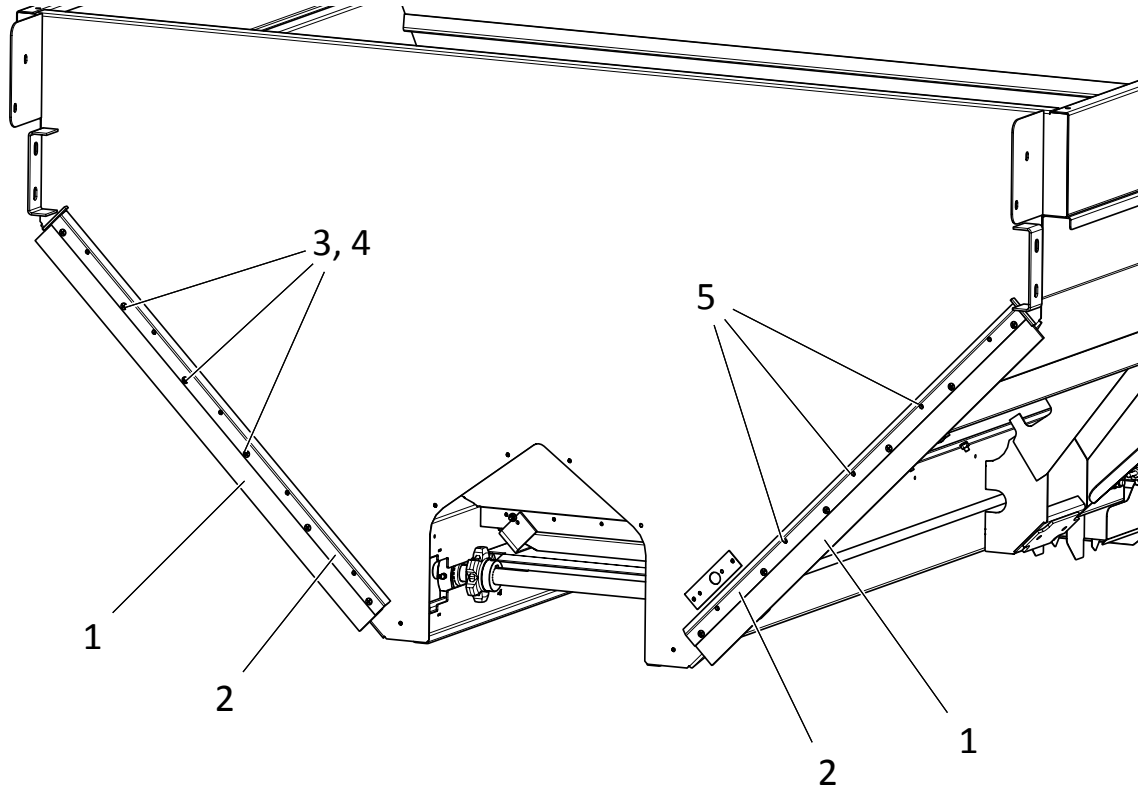

ITEM	PART NO.	DESCRIPTION	QTY
	313408	Sealer - Group Front, Includes Items 1 - 5	1
	306637	Seal- Assy 304, Includes Items 1- 4	2
1	306582	Seal- Belting Pre-Cut	2
2	306581	Retainer- Seal 304	2
3	56258	Screw- Truss Head 1/4-20NC x 1/2 SS	12
4	88931	Nut - Tee 1/4-20NC x 1/4	12
5	36395	Cap Screw - 1/4-20NC x 1 SS	10

#4 Belt-Over-Chain Conveyor, Bin 2

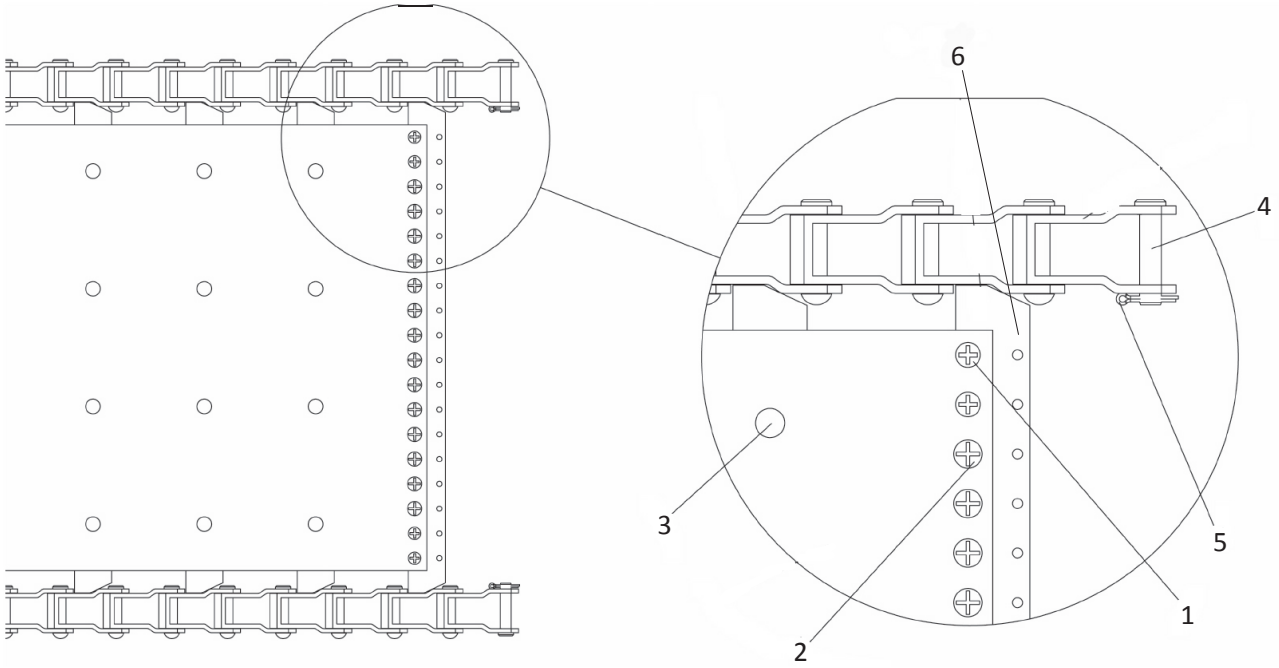

ITEM	PART NO.	DESCRIPTION	QTY
	308712-AA 308712-AC	Chain Wldmt - 5' Unit, Includes Items 1 - 6 Chain Wldmt - 7' Unit, Includes Items 1 - 6	1 1
1	20617	Screw - Flat 1/4-20NC x 1/2	8
2	20624	Screw - Truss Head 1/4-20NC x 1/2	28
3	308534	Screw - 1/4 x 1/2-20NC	AR
4	21118	Pin - Chain Pintle	2
5	20817	Pin - Cotter	2
6	70473	Bar - Splicer	1

Chain Shields, Bin 2

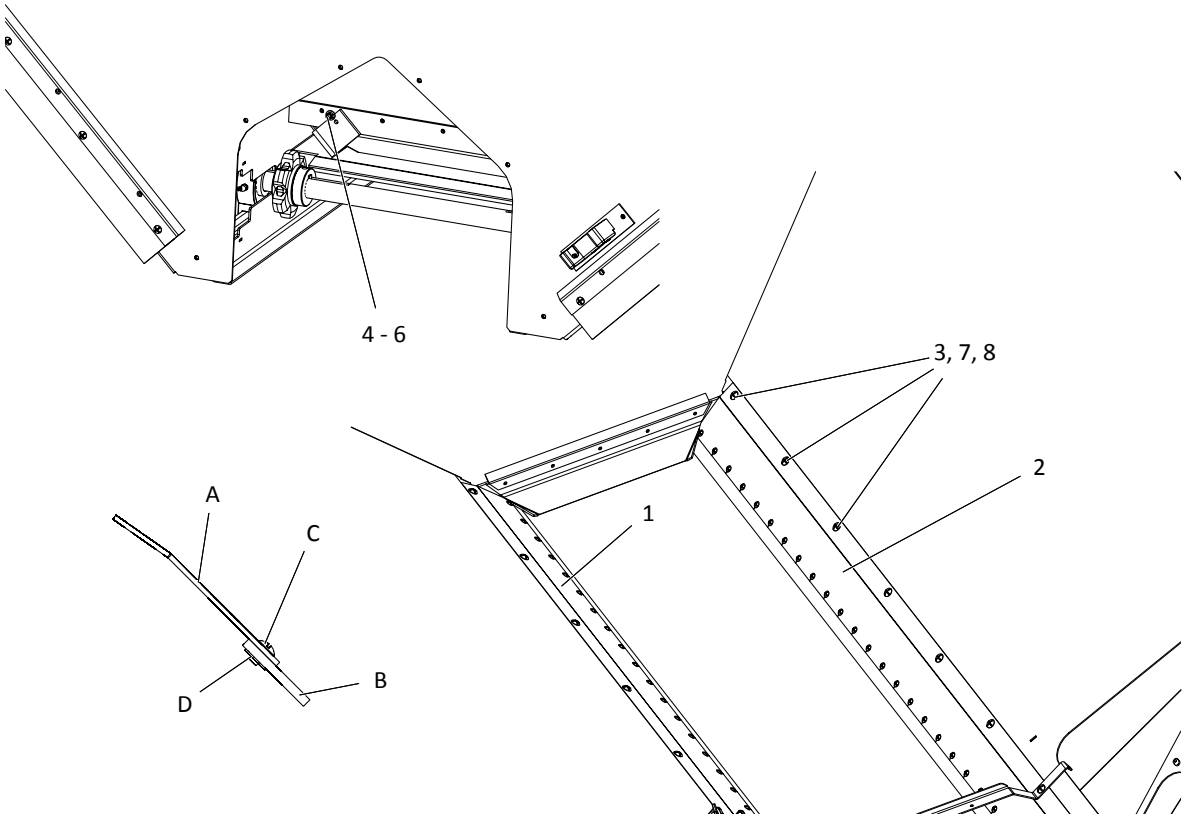

ITEM	PART NO.	DESCRIPTION	QTY
1	306542-AA	Shield - Chain Assy LH 304	1
2	306542-AB	Shield - Chain Assy RH 304	1
A	86798	Shield – Chain	2
B	305975	Belting – Sealer	AR
C	56258	Screw – Truss Head 1/4-20NC x 1/2	54
D	88931	Nut – Tee 1/4-20NC x 1/4	54
3	71829	Screw – Machine 3/8-16NC x 1 SS	16
4	42033	Screw - Truss Head 3/8-16NC x 1 SS	2
5	36423	Screw - Truss Head 1/4-20NC x 1 SS	2
6	36412	Washer - Flat 1/4 SS	2
7	36414	Nut – Hex 3/8-16NC SS	16
8	36420	Washer – Lock 3/8 SS	16

AR – As Required

Conveyor Idler

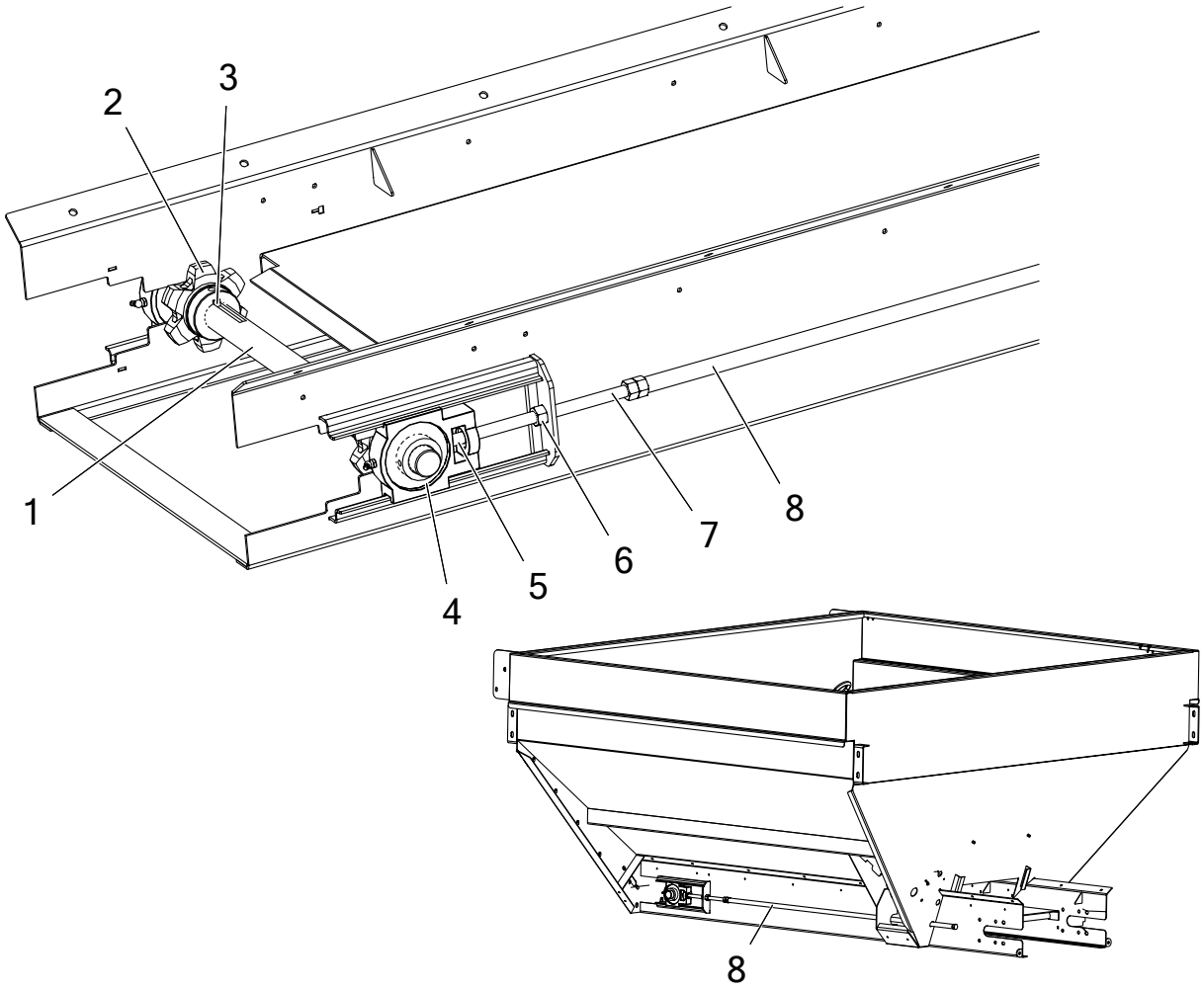

ITEM	PART NO.	DESCRIPTION	QTY
	89780	Shaft - Idler Assy, Includes 1-5	
1	89779	Shaft - Idler	1
2	86757	Sprocket	2
	20743	Screw - Set 5/16-18NC x 3/8	4
3	6131	Key - Square	2
4	22511	Bearing	2
5	17078	Collar - Set	2
6	87856	Nut Wldmt 304	2
7	87857	Bolt Wldmt	2
8	306595	Extended Idler - Pipe Wldmt Adj 304	2

* - Not Shown

Conveyor Drive & Encoder

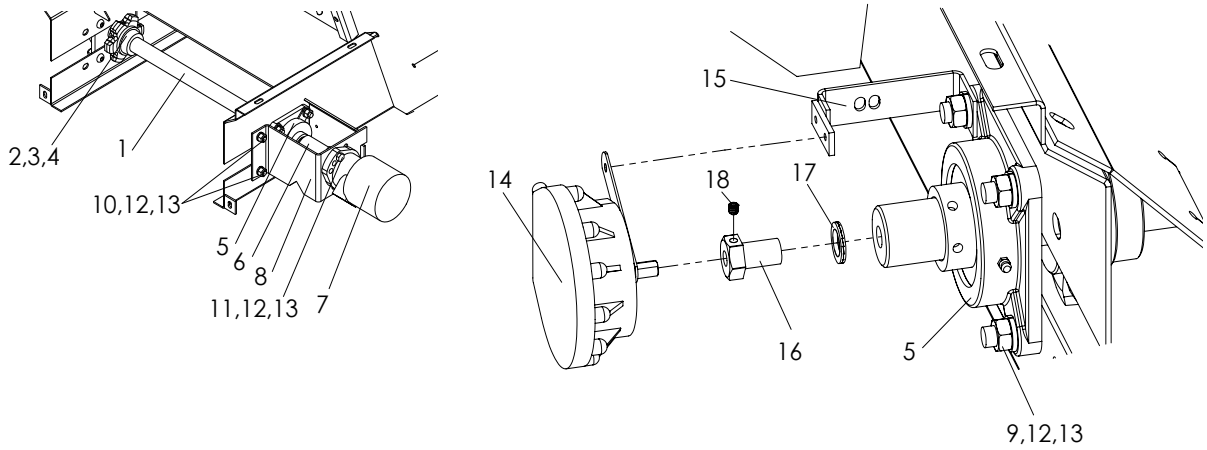

ITEM	PART NO.	DESCRIPTION	QTY
	86759-X1	Shaft - Drive Assy, Includes Items 1-5	
1	310644	Shaft - Drive	1
2	86757	Sprocket	2
3	6131	Key - Square	2
4	20743	Screw - Set	4
5	6697	Bearing	2
6	86762 *4059	Coupling - Shaft Key - Square 5/16 x 1-1/2	1 1
7	311056 *56327	Motor - Hydraulic 29.1 CID Seal Kit	1 1
8	86766	Mount - Motor	1
9	304484	Screw - Button Head 1/2-13NC x 1-1/2 SS	8
10	72056	Bolt - Carriage 1/2-13NC x 1 SS	2
11	36539	Cap Screw - 1/2-13NC x 1-1/2 SS	2
12	36422	Washer - Lock 1/2 SS	12
13	36416	Nut - Hex 1/2-13NC SS	12
14	303994	Encoder - Conveyor 180	1
15	304953-X1	Bracket - Encoder	1
16	310601	Coupler - Rate Sensor	1
17	310602	Washer - Special Lock	1
18	310603	Screw - Set 1/4-20NC x 5/16 SS	1

* - Not Shown

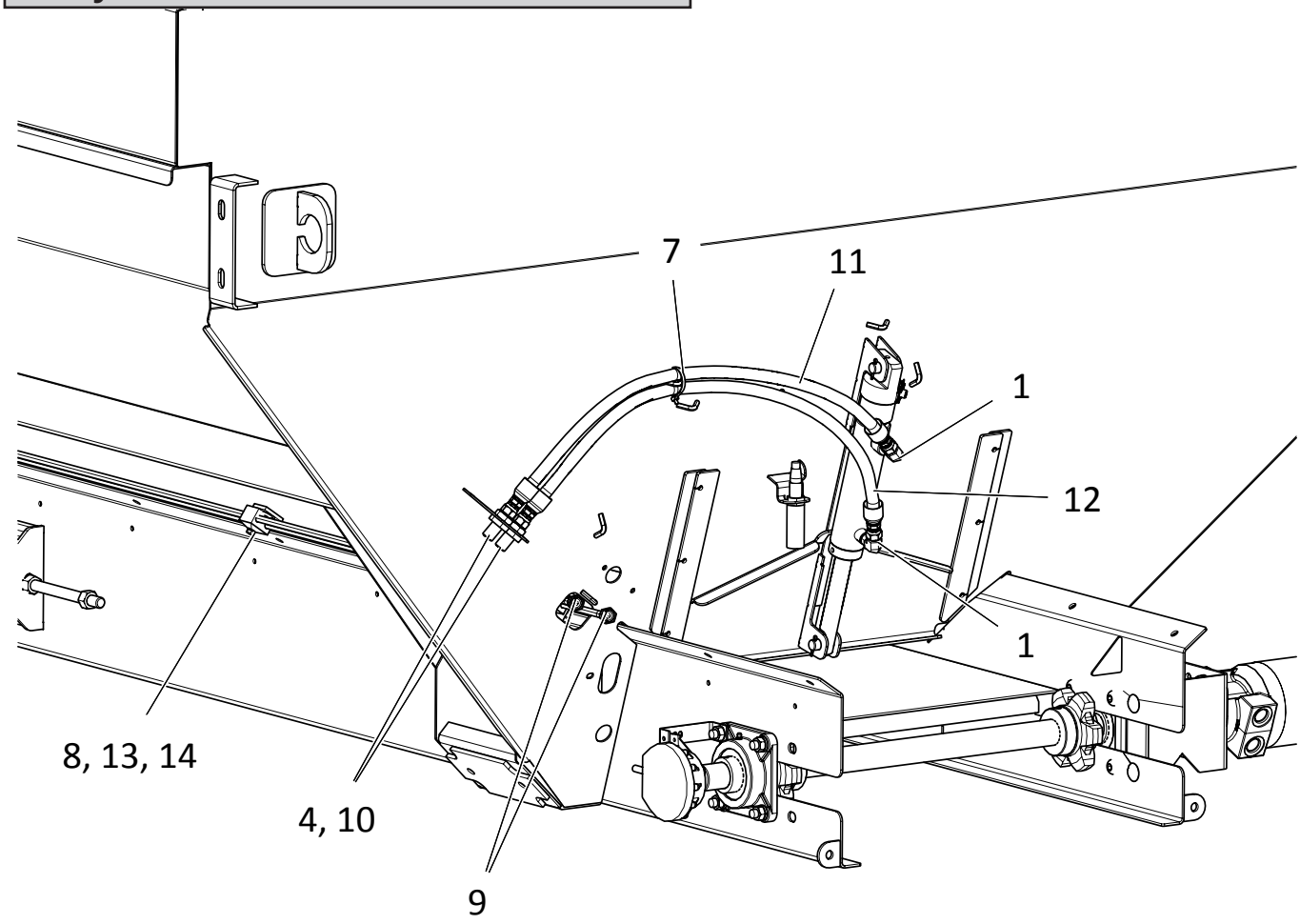

ITEM	PART NO.	DESCRIPTION	QTY
1	313465	Fitting - 6-4 520220	4
2	313468	Fitting - 6-6 520701	2
3	313467	Fitting - 6 520118	2
4	313485	Fitting - 6 520118 304	2
5	313549	Hose - Assy SAE 6 x 23 100R1	1

MultiBin

Hydraulics Cont.

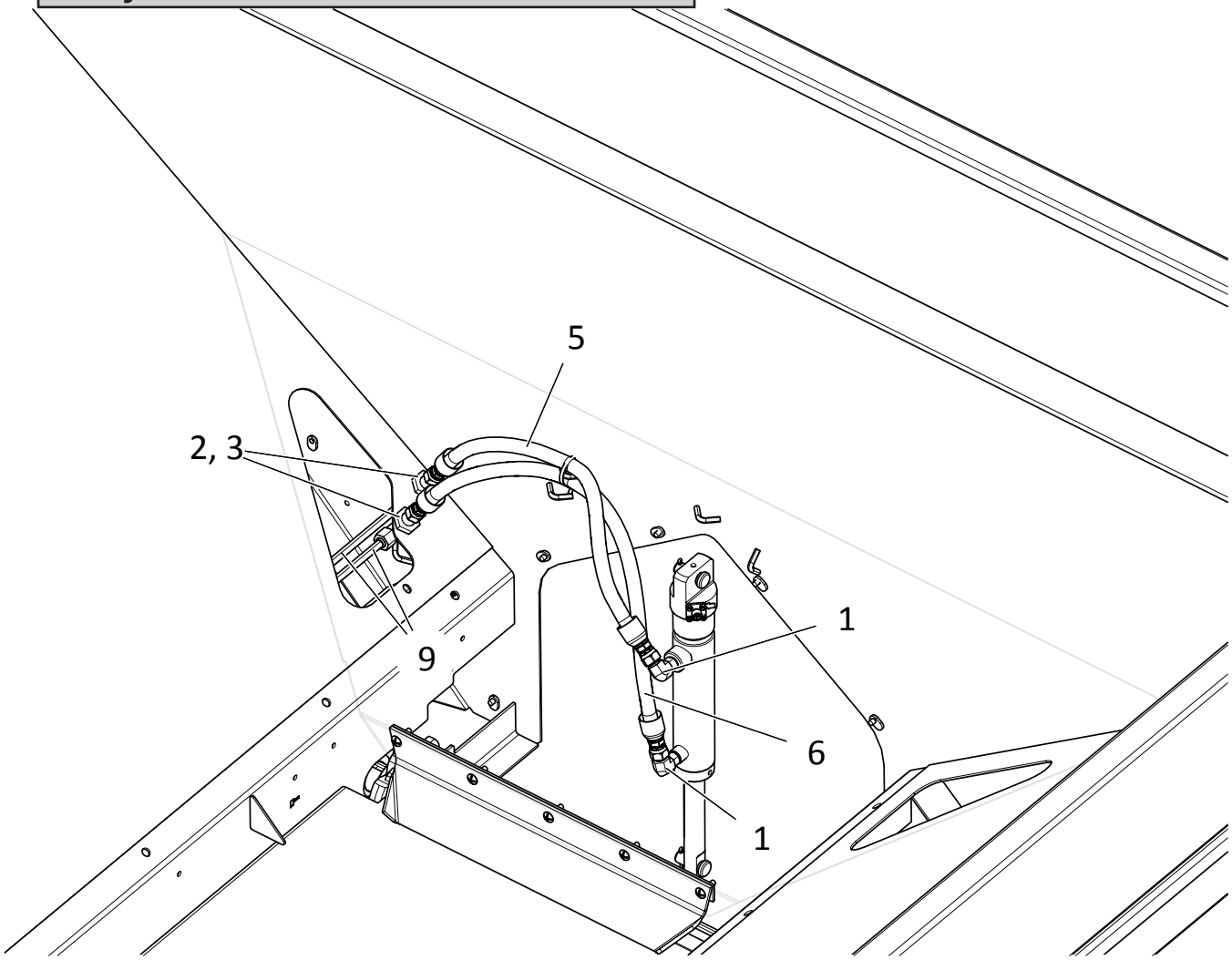

ITEM	PART NO.	DESCRIPTION	QTY
6	313550	Hose - Assy SAE 6 x 24-1/2 100R1	1
7	99674	Tie - Wire	2
8	313385	Clamp - Tubing Twin 3/8	3
9	314428 313337	Tube - Assy 3/8 SS 5' MultApplier Tube - Assy 3/8 SS 7' MultApplier	2 2
10	313486	Fitting - 6-6 520601 304	2
11	313543	Hose - Assy SAE 6 x 30 100R1	1
12	313544	Hose - Assy SAE 6 x 32-1/2 100R1	1
13	36418	Washer - Lock 1/4	3
14	40750	Cap Screw - 1/4-20NC x 1-1/4 SS	3

Lubrication

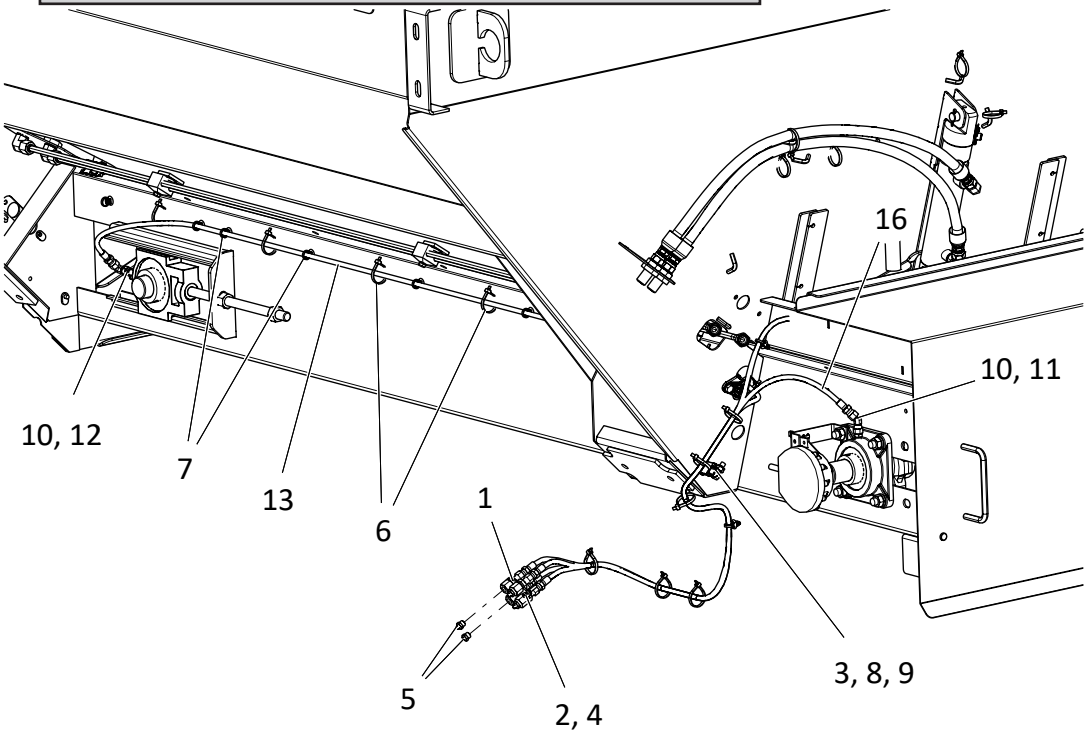

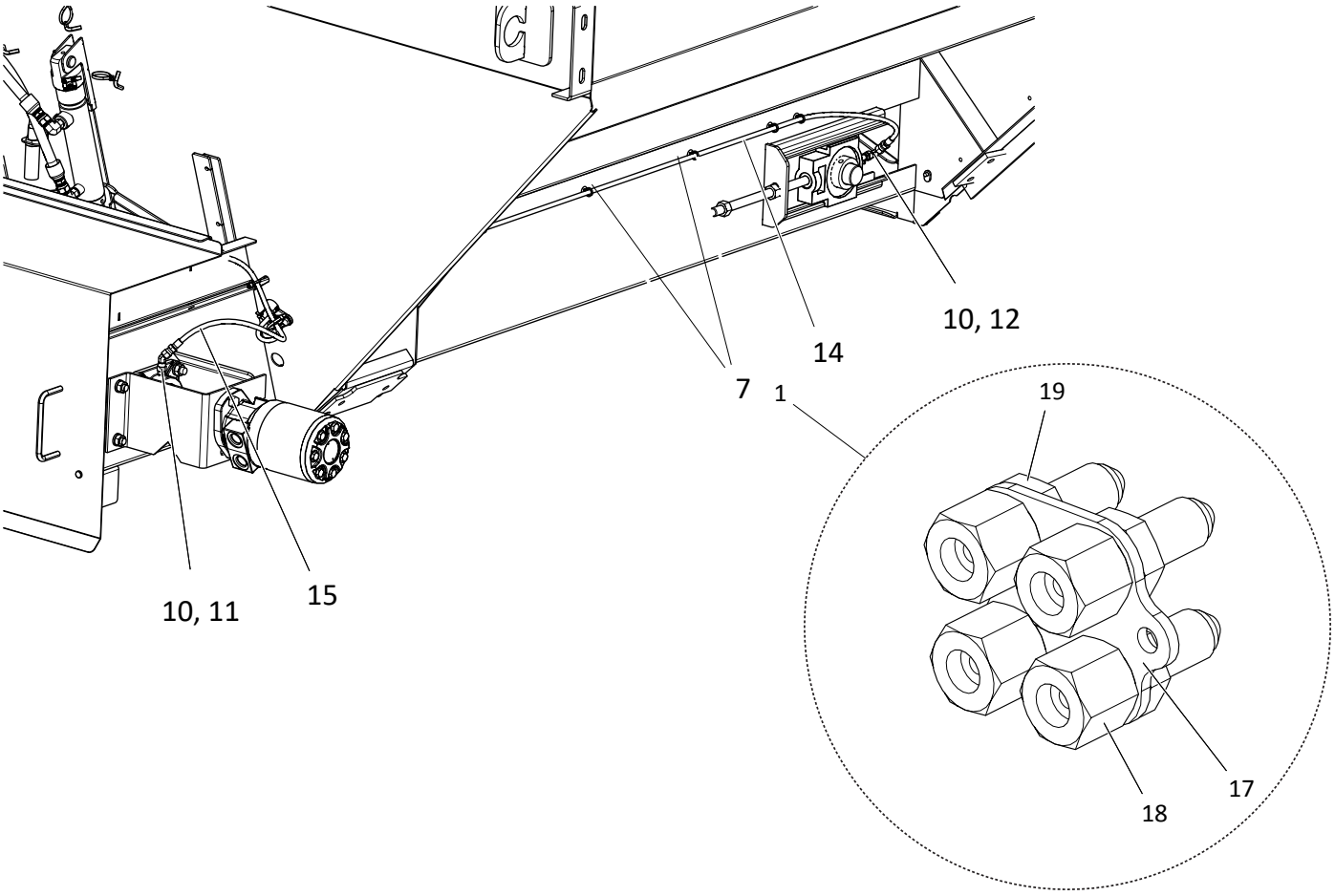

MultiBin

Lubrication Cont.

ITEM	PART NO.	DESCRIPTION	QTY
1	313915	Lube Bank - Assy 4 Position, Includes Items 17 - 19	1
2	44454	Screw - Socket Head @10-24NC x 1 SS	2
3	42221	Nut - Lock 5/16-18NC SS	3
4	56355	Nut - Lock #10-24NC SS	2
5	313917	Zerk - Grease 1/8-27 NPT SS	4
6	99674	Tie - Wire	9
7	311806	Tie - Wire Fir Tree	19
8	312964	Clip - Harness Mounting	3
9	34580	Cap Screw - 5/16-18NC x 1 SS	3
10	34787	Fitting - 4-2 070102	4
11	313501	Fitting - 4-4 070321	2
12	34868	Fitting - 4-4 070221	2
13	314430 313667	Hose - Assy LH Idler Bearing 5' MultApplier Hose - Assy LH Idler Bearing 7' MultApplier	1 1
14	314431 313668	Hose - Assy RH Idler Bearing 5' MultApplier Hose - Assy RH Idler Bearing 7' MultApplier	1 1
15	313669	Hose - Assy LH Drive Bearing	1
16	313670	Hose - Assy RH Drive Bearing	1
17	313912	Plate - Lube Bank 4 Position	1
18	313916	Fitting - 4-2 Non-Standard Bulkhead	4
19	311489	Fitting - 4 070118 Nut	4

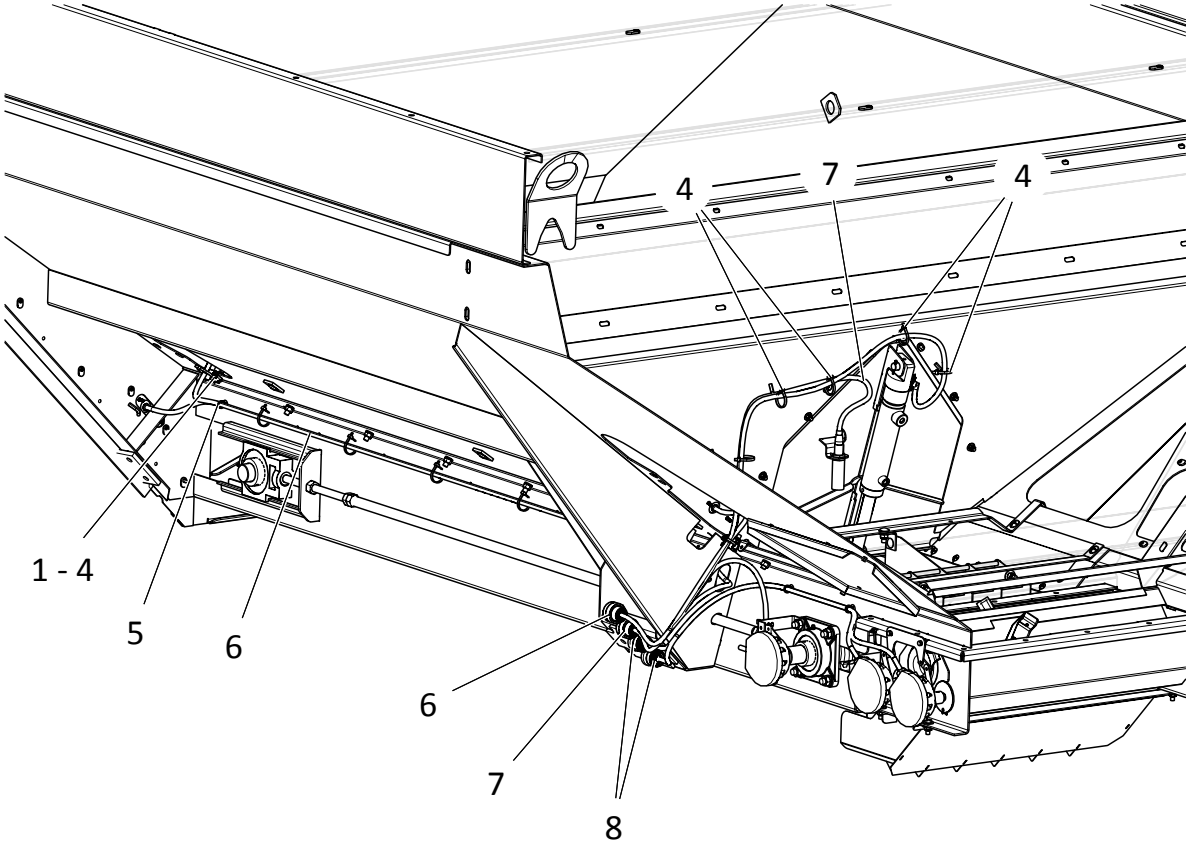

NOTE: MICRO BIN PANELS GHOSTED FOR CLARITY.

ITEM	PART NO.	DESCRIPTION	QTY	
			3 Bin	4 Bin
1	312964	Clip - Harness Mounting	2	2
2	34580	Cap Screw - 5/16-18NC x 1 SS	2	2
3	42221	Nut - Lock 5/16-18NC SS	2	2
4	99674	Tie - Wire	18	18
5	311806	Tie - Wire Fir Tree	4	4
6	313998	Harness - Bin 1 Insert Control	1	1
7	313999	Harness - Bin 2 Insert Control	1	1
8	316666	Harness - Bin 3/4 Insert Cntrl	1	2

This page is intentionally left blank.

MultiBin

Pads

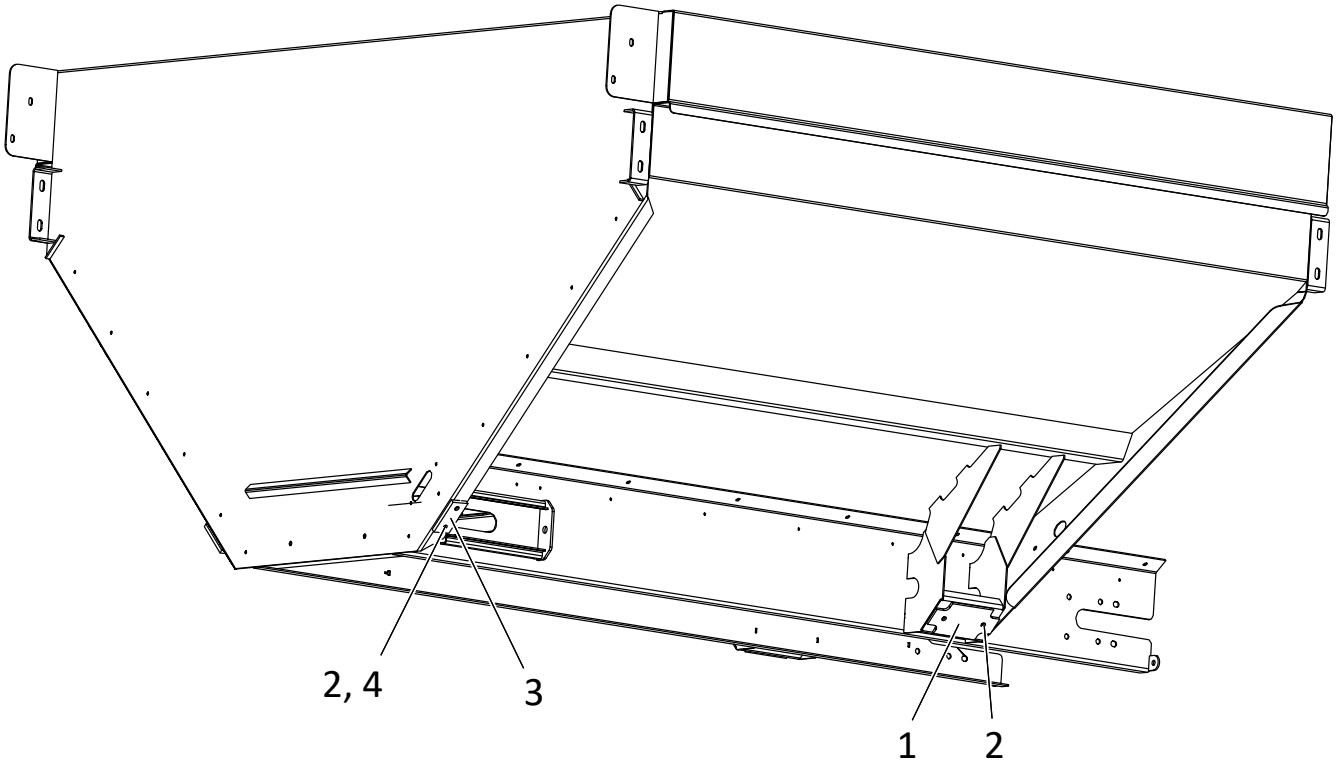

ITEM	PART NO.	DESCRIPTION	QTY
1	306924	Mount - Foot Pad	2
2	47268	Screw - Flathead 1/4-20 x 1 SS	8
3	307097	Mount - Pad	2
4	42034	Nut - Lock 1/4-20 SS	4

MultiBin

Decals

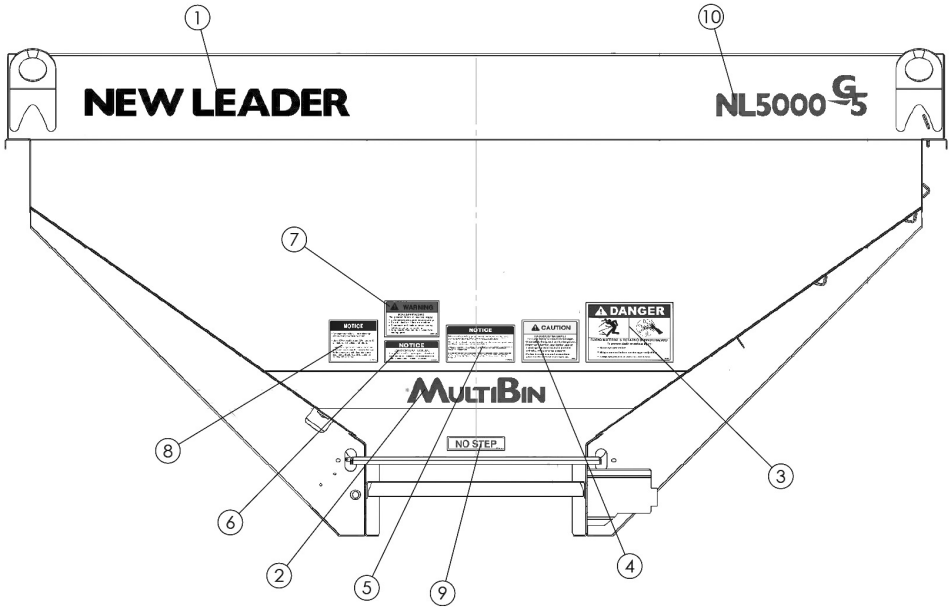

Note: See "Safety Decals" in Safety section for details.

ITEM	PART NO.	DESCRIPTION	QTY
1	312561	Decal - New Leader, Black	1
2	312971	Decal - MultiBin, Black	1
3	368	Decal - Danger, Flying Material Hazard	1
4	321	Decal - Caution, Hazardous Materials	1
5	312276	Decal - Notice, Spread Pattern	1
6	304206	Decal - Caution, Do Not Spread Herbicide	1
7	55631	Decal - Warning, Moving Part Hazard	1
8	21476	Decal - Notice, Chain Lubrication	1
9	39017	Decal - No Step	1
10	316502	Decal - NL5000 Black	1

Panel Group - Single Micro

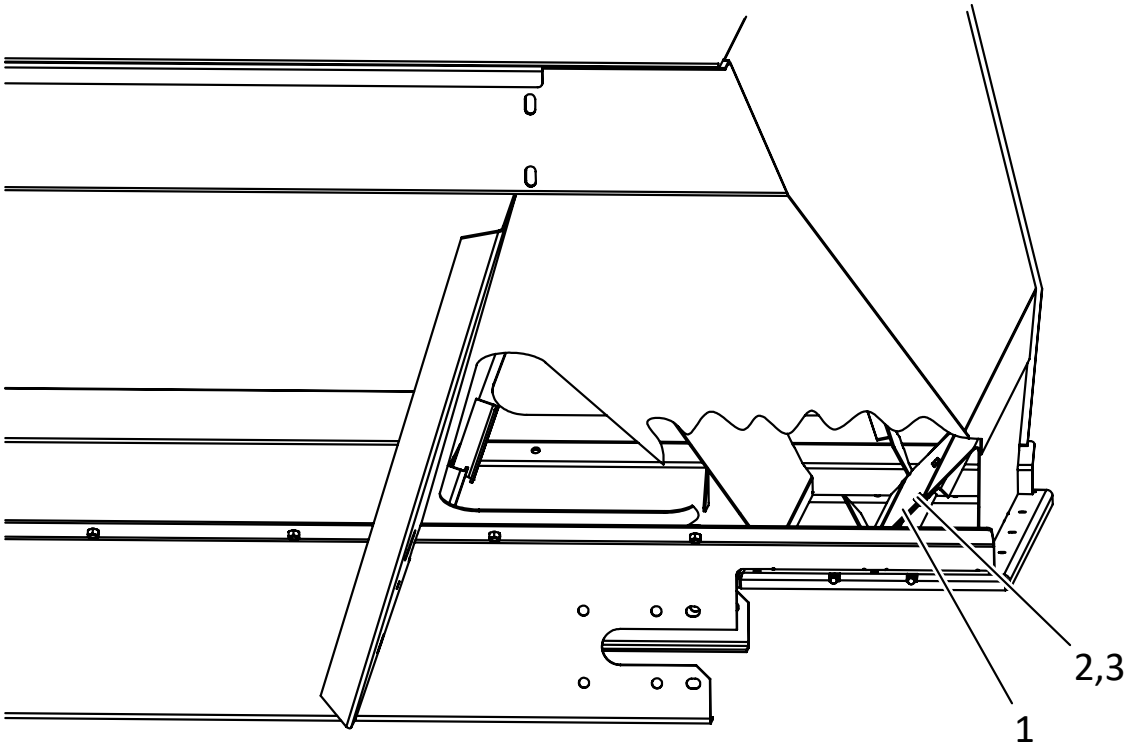

* - Parts removed for clarity.

ITEM	PART NO.	DESCRIPTION	QTY
1	306532	Panel - Wldmt Rear 304	1
2	36393	Cap Screw - 1/4-20 x 3/4 SS	3
3	36418	Washer - Lock	3

MultiBin

Divider Panel - Dual Micro

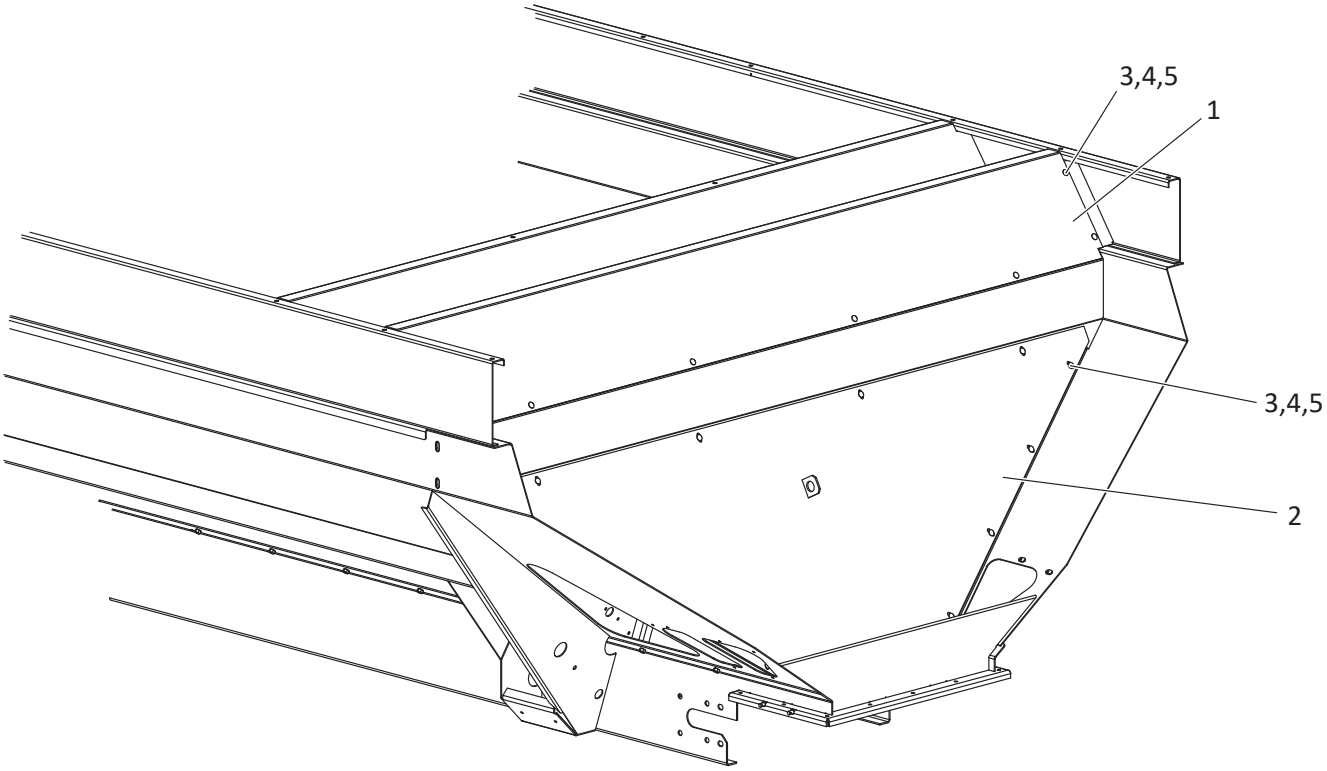

* - Rear Endgate removed for clarity.

ITEM	PART NO.	DESCRIPTION	QTY
1	306528	Panel - Insert Upper 304	1
2	306529	Panel - Wldmt Lower 304	1
3	42639	Bolt - Carriage 5/16 x 1 SS	26
4	36424	Washer - Flat 5/16	26
5	42221	Nut - Lock 5/16 SS	26

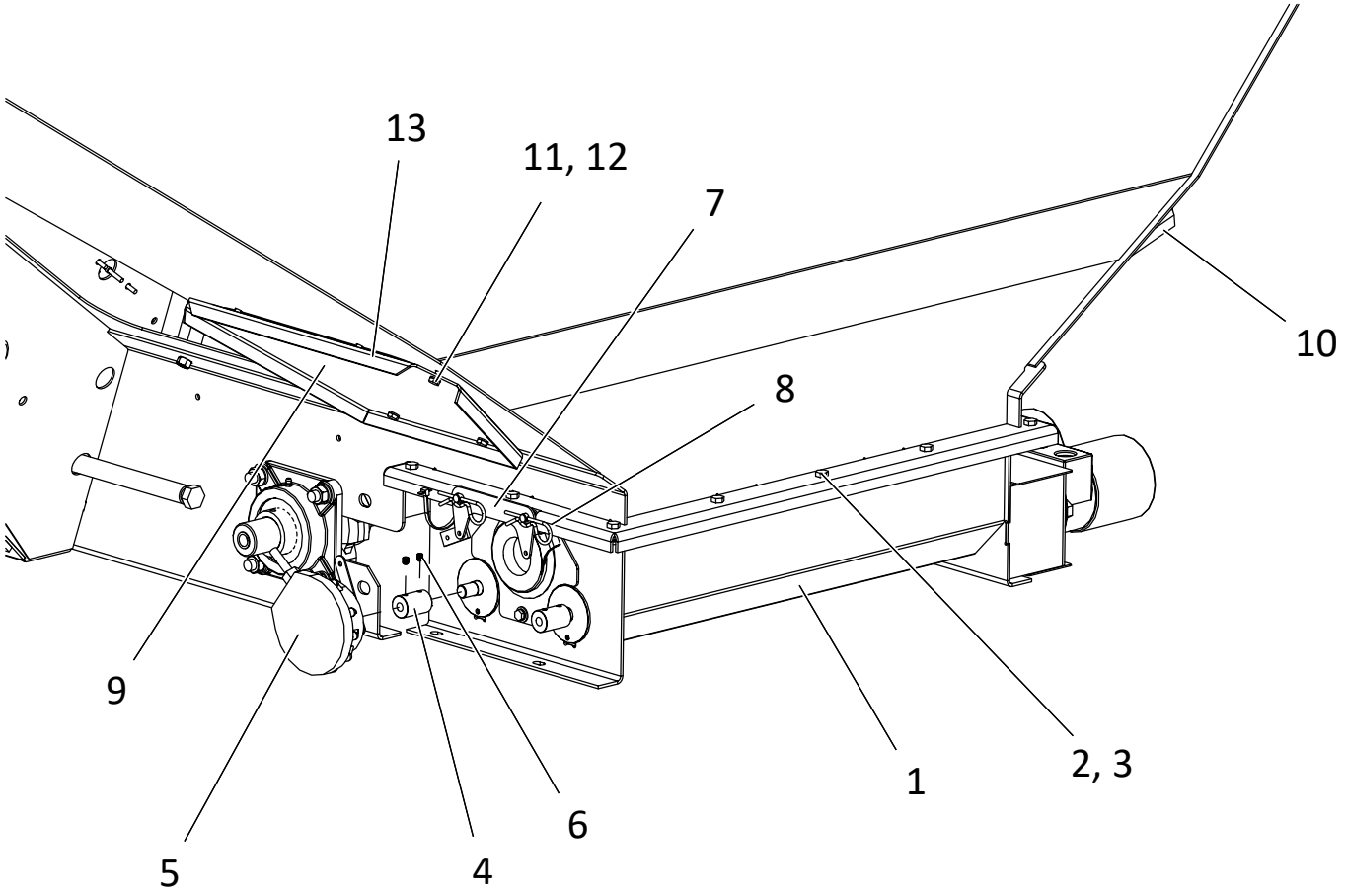
13
11, 12
7
10
8
9
1
2, 3
6
5
4

MultiBin

Micro Group Cont.

ITEM	PART NO.	DESCRIPTION	QTY	
			3 Bin	4 Bin
1	312254 312255	Micro - Assy Single Micro - Assy Dual	1 --	-- 1
2	56858	Cap Screw - 5/16 x 3/4	12	12
3	42221	Nut - Lock 5/16 SS	12	12
4	304170	Coupling - Encoder 5/8 Shaft	1	2
5	303994-AA 303994-AB	Encoder Mount - Kit	1 1	2 2
6	310603	Screw - Set 1/4-20NC x 5/16 SS	2	4
7	312963	Bracket - Torque Arm	1	1
8	36429	Pin - Hair	2	2
9	306706-AA	Cover - MultiBin Access LH 304	1	1
10	306706-AB	Cover - MultiBin Access RH 304	1	1
11	36418	Washer - Lock 1/4 SS	12	12
12	36393	Cap Screw - 1/4 x 3/4 SS	12	12
13	306819	Seal - Rubber	AR	AR

AR - As Required

Micro Assembly

3 BIN

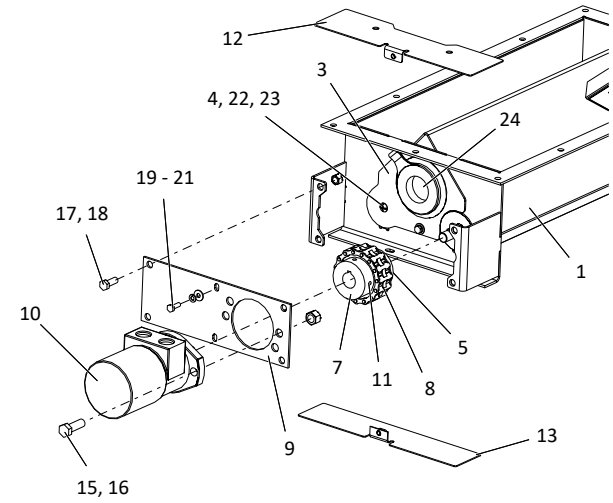

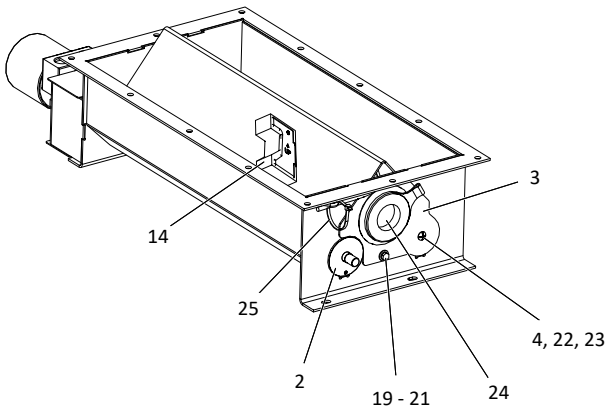

4 BIN

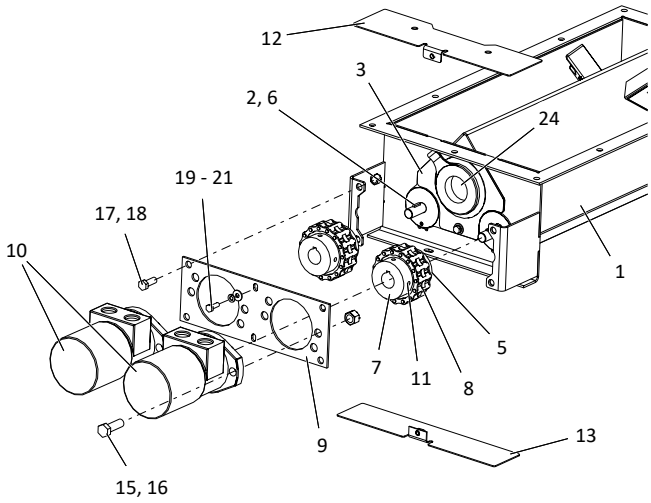

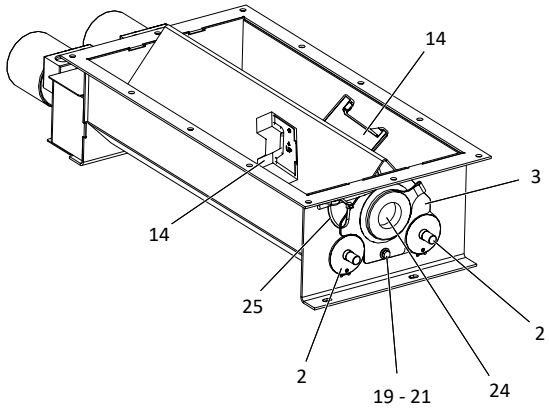

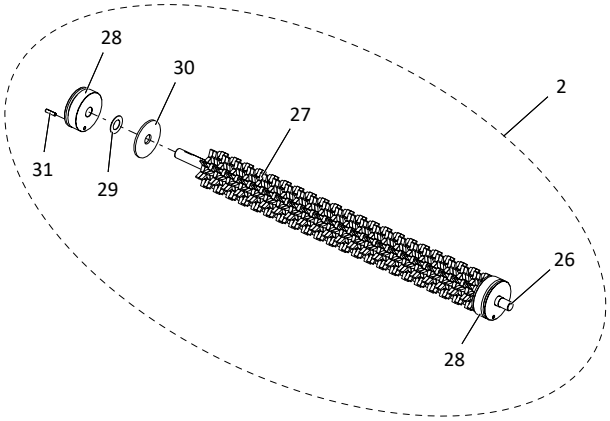

MultiBin

Micro Assembly Cont.

ITEM	PART NO.	DESCRIPTION	QTY 3 Bin	QTY 4 Bin
	312254	Micro - Assy Bottom Single 304, Includes Items 1 - 32	1	--
	312255	Micro - Assy Bottom Dual 304 Includes 1 - 3, 5 - 21, 24 - 32	--	1
1	306534	Micro - Wldmt Bottom 304	1	1
2	312253	Wheel - Assy Meter Wheel 304, Includes Items 27 - 32	1	2
3	306555 306556	Retainer - Cover Single 304 Retainer - Cover Dual 304	1 --	-- 1
4	306557	Guide Retainer 304	1	--
5	39685	Coupling - Chain, Half	1	2
6	34562	Key - Woodruff 5/32 x 5/8	1	2
7	11409	Coupling - Chain, Half	1	2
8	306865	Chain - Assembly 304	1	2
9	306547 306548	Mount - Motor Single 304 Mount - Motor Dual 304	1 --	-- 1
10	304129 313015	Motor - Hydraulic 11.9 CID Seal Kit	1 1	2 2
11	20737	Screw - Set 1/4 x 1/2	4	8
12	306549	Guard - Wldmt Upper 304	1	1
13	306551	Guard - Wldmt Lower 304	1	1
14	98787-AB	Sensor - Bin Level 18" Lead	1	2
15	36539	Cap Screw - 1/2-13NC x 1-1/2	2	4
16	39016	Nut - Lock 1/2-13NC SS	2	4
17	36398	Cap Screw - 3/8-16NC x 1 SS	4	4
18	72054	Nut - Lock 3/8-16NC SS	4	4
19	36393	Cap Screw - 1/4-20NC x 3/4 SS	4	4
20	36423	Washer - Flat 1/4 SS	4	4
21	36418	Washer - Lock 3/8	4	4
22	32446	Screw - Truss Head 1/4-20NC x 3/4	2	--
23	42034	Nut - Lock 1/4-20NC SS	2	--
24	306807	Plug - Inspection	2	2
25	99674	Tie - Wire	2	2
26	304130	Shaft - Meter Wheel	1	2

Micro Assembly Cont.

ITEM	PART NO.	DESCRIPTION	QTY	
			3 Bin	4 Bin
27	312252	Wheel - Meter Section 304	88	176
28	304125	Hub - Bearing	2	4
29	304133	Washer	2	4
30	96066	Washer - Rubber	2	4
31	56313	Pin - Roll	2	4

This page is intentionally left blank.

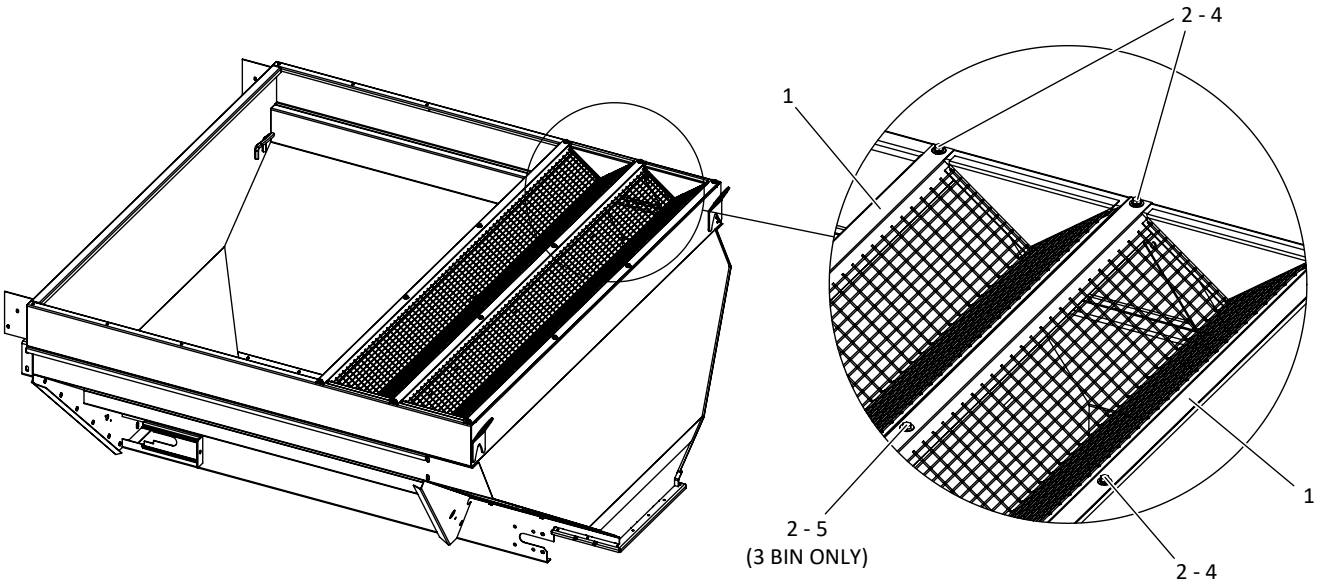

ITEM	PART NO.	DESCRIPTION	QTY	
			3 Bin	4 Bin
1	306931	Screen - Wldmt 304	2	2
2	36293	Cap Screw - 3/8-16NC x 3/4 SS	12	10
3	36425	Washer - Flat 3/8 SS	14	10
4	36420	Washer - Lock 3/8 SS	12	10
5	36414	Nut - Hex 3/8-16NC SS	2	--

MultiBin

Micro Cover Group

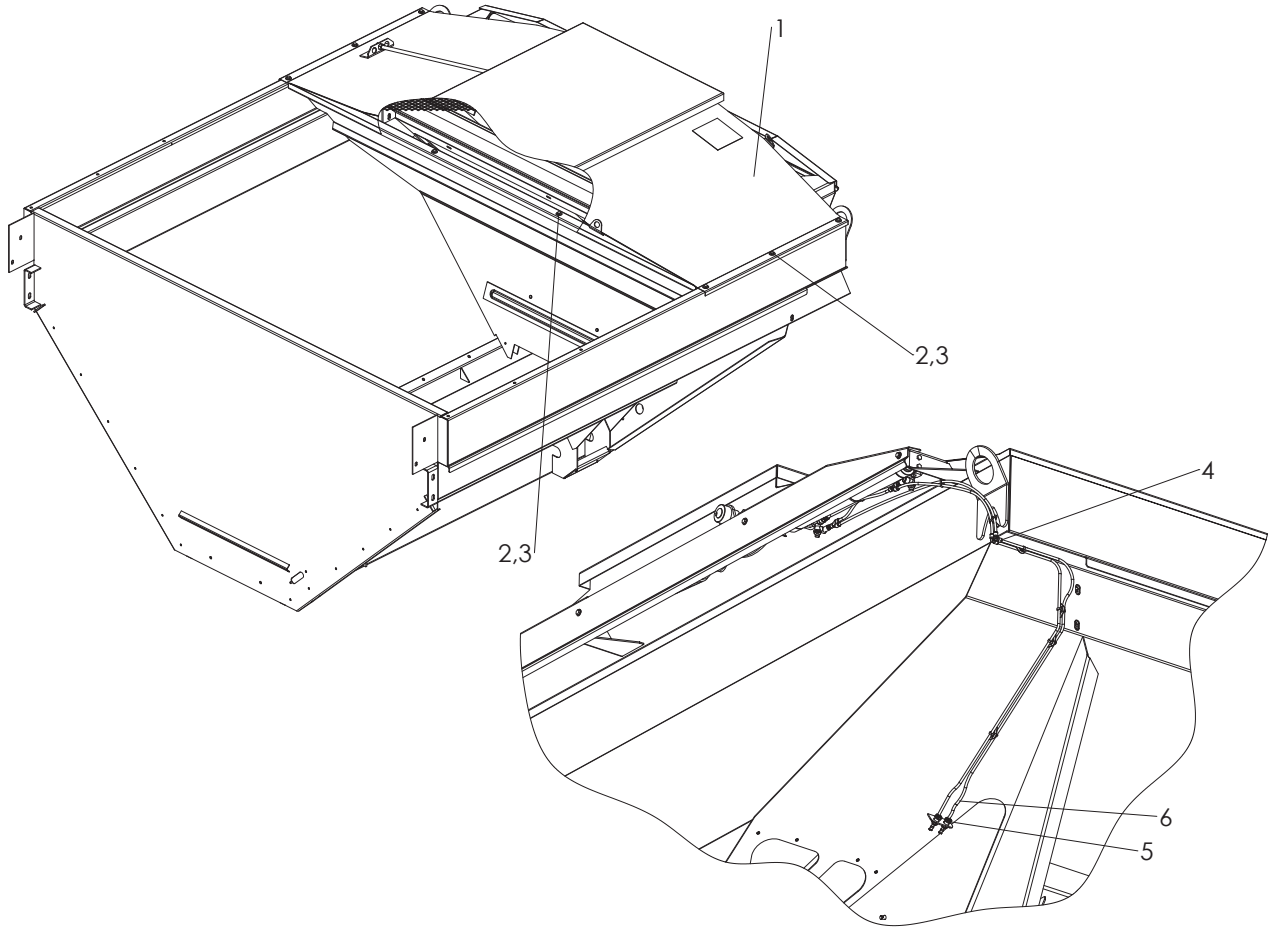

ITEM	PART NO.	DESCRIPTION	QTY
1	306629	Cover - Assy MultiBin 304	1
2	36398	Cap Screw - 3/8 x 1 SS	10
3	36425	Washer - Flat 3/8 SS	10
4	306833	Fitting	2
5	306829	Fitting	2
6	9005-0-7761	Tubing - 1/4 OD Airbrake Lock	ft. 11

MultiBin

Micro Cover Assembly

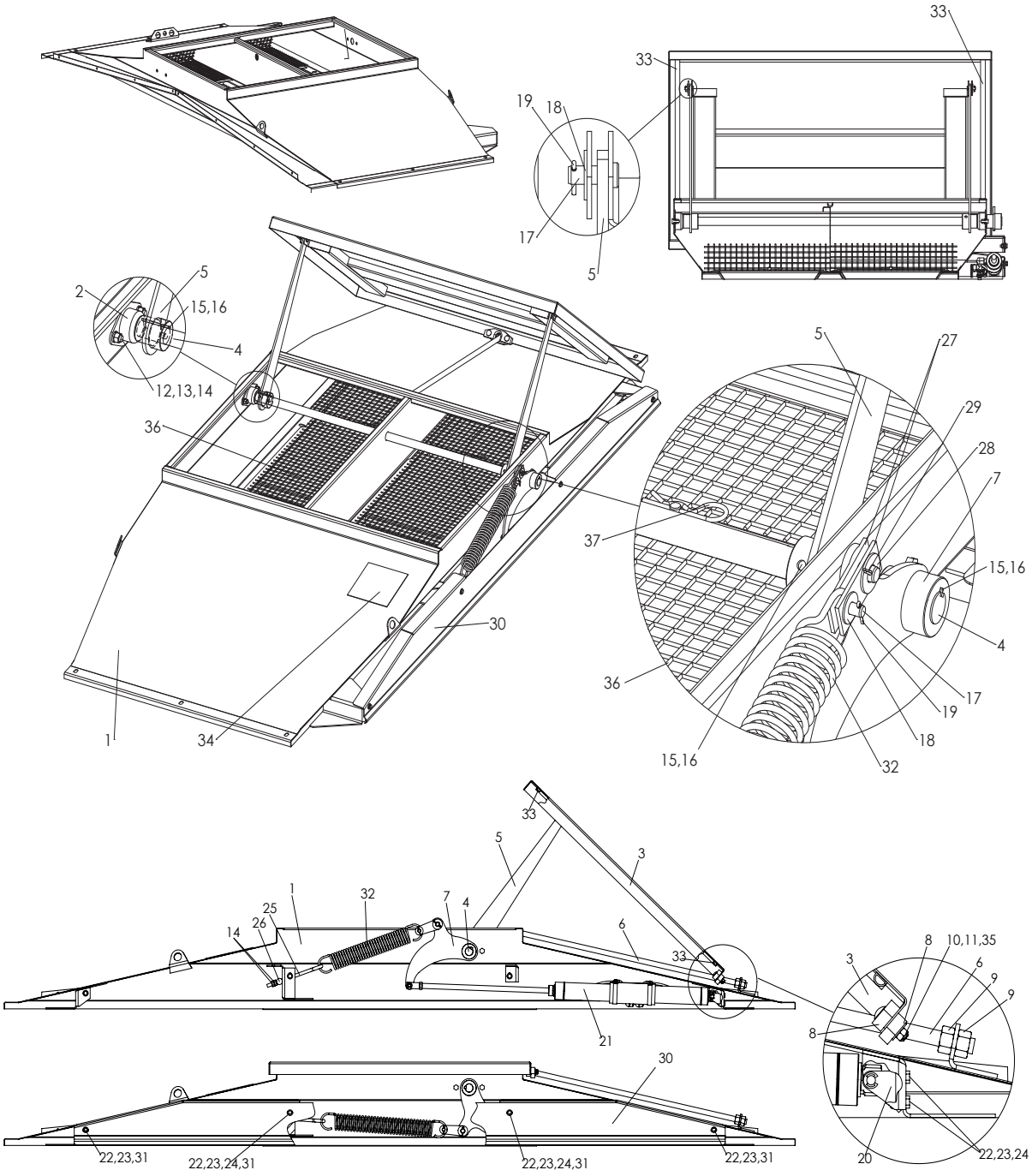

ITEM	PART NO.	DESCRIPTION	QTY
	306629	Cover - Assy	
1	306586	Cover - Wldmt	1
2	306711	Bearing - Flange 1"	2
3	306597	Lid - Wldmt 304	1
4	306710	Shaft - Pivot 304	1

MultiBin

Micro Cover Assembly Cont.

ITEM	PART NO.	DESCRIPTION	QTY
5	306709	Link - Wldmt 304	2
6	306607	Rod - Guide 304	1
7	306697	Pivot - Wldmt 304	1
8	306809	Block - Guide	2
9	36417	Nut - Hex 5/8 SS	2
10	42221	Nut - Lock 5/16 SS	2
11	36424	Washer - Flat 5/16	2
12	36293	Cap Screw - 3/8 x 3/4 SS	4
13	36420	Washer - Lock 3/8 SS	4
14	36414	Nut - Hex 3/8 SS	5
15	2212	Key - Square 1/4 x 1-1/2	3
16	20742	Screw - Set 5/16 x 5/16	6
17	306816	Pin - Clevis	3
18	36425	Washer - Flat 3/8 SS	3
19	306817	Pin - Cotter	3
20	306811	Clevis - Base Cylinder SS	1
21	311034	Cylinder - Assy	1
22	36393	Cap Screw - 1/4 x 3/4 SS	6
23	36418	Washer - Lock 1/4 SS	6
24	36412	Nut - Hex 1/4 SS	4
25	306814	Eyebolt - Wire 3/8 x 6 SS	1
26	306618	Pivot - 304	1
27	311040	Plate - Clevis Spring 304	2
28	36426	Washer - Flat 1/2 SS	1
29	36427	Pin - Cotter 1/8 x 1	1
30	306806	Guard - Rear 304	1
31	36423	Washer - Flat 1/4 SS	6
32	306813	Spring	1
33	306818	Seal - Rubber	ft. 12.25
34	55241	Decal - Danger Pinch Point	1
35	8804	Bolt - Carriage 5/16 x 1 SS	2
36	306870	Screen - Wldmt 304	2
37	36429	Pin - Hair	4

Micro Cover Lid Pneumatics

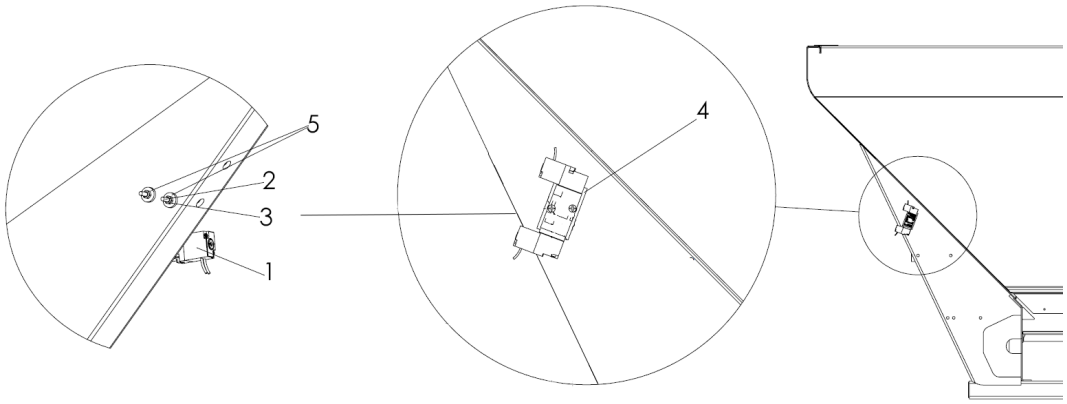

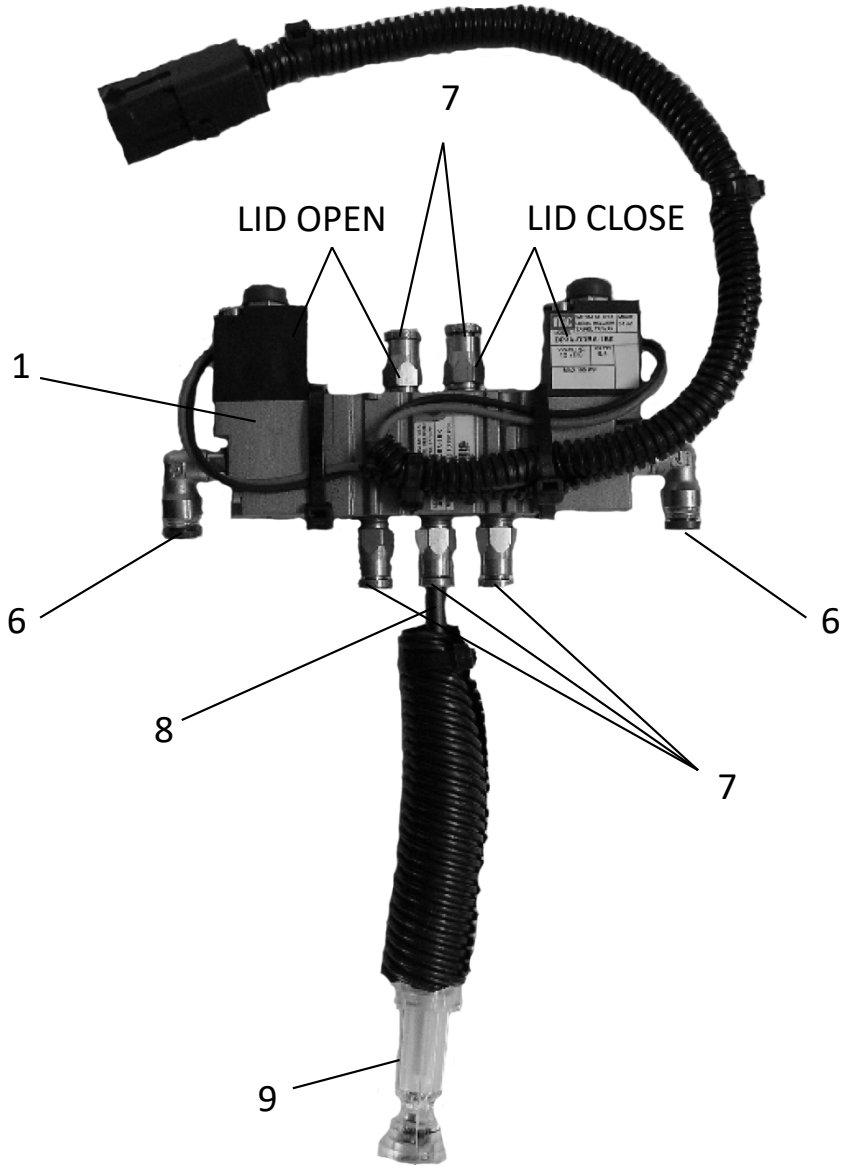

Micro Cover Lid Pneumatics Cont.

ITEM	PART NO.	DESCRIPTION		QTY
	307186	Valve - Assy, Includes Items 1, 6 - 14		1
	307189	Control - Kit Lid, Includes Items 13 & 14		1
1	307185	Valve - Assy, Includes Items 8 - 11		1
2	307598	Screw - Truss Head #8-32NC x 2 SS		2
3	45168	Nut - Lock #9-32NC		2
4	307596	Spacer - Air Valve Mntg		1
5	307597	Washer - Step		2
6	307187	Fitting - 4-0 630220B		2
7	9005-0-7833	Fitting - 4-2 630102B		5
8	9005-0-7761	Tubing - Air Brake	ft.	0.42
9	311039	Filter - In-Line		1
10	*306868	Switch - Cab Control		1
11	*306869	Harness - Switch 8’		1

AR - As Required * - Not Shown

Micro Cover Air Cylinder

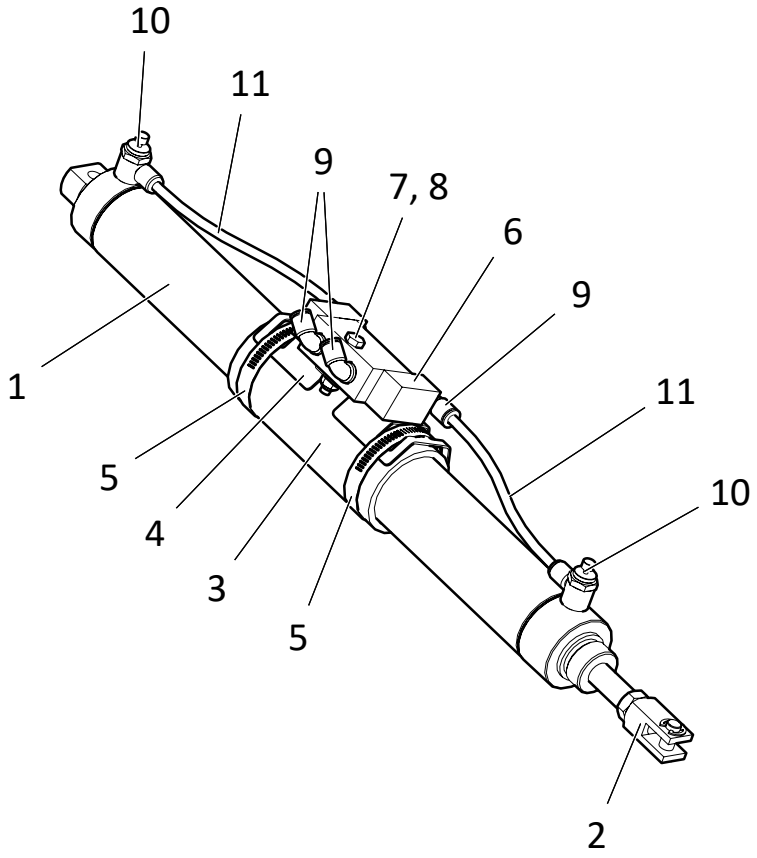

ITEM	PART NO.	DESCRIPTION		QTY
	311034	Cylinder Assy		1
1	306810	Cylinder - Air 2 x 16 SS		1
2	306812	Clevis - Rod Cylinder SS		1
3	311038	Isolator - Tube		1
4	311037	Mount - Valve 304		1
5	308029	Clamp - Hose SAE 36 SS		2
6	311035	Valve - Dual Pilot Check		1
7	42448	Cap Screw - 1/4-20NC x 1-1/2 SS		1
8	42034	Nut - Lock 1/4-20NC SS		1
9	308222	Fitting - 4-4 630202K		4
10	311036	Valve - Speed Control		2
11	9005-0-7761	Tubing -1/4 OD Airbrake Black	ft.	1.33
12	*306828	Fitting - Plug Composite 4 630101K		2

* - Not Shown (for shipping only)