MODEL SUPER P
Operator's Manual

UNIT SERIAL NUMBER _____

MANUAL NUMBER: 301321-AA-H

EFFECTIVE 06/2019

1330 76TH AVE SW
CEDAR RAPIDS, IA 52404-7052
PHONE (800) 363-1771 | FAX (319) 286-3350
www.newleader.com

Table of Contents

Table of Contents

NOTE:	This manual incorporates several interactive features to provide supplemental information and ease of navigation. The information below is to aid in the identification and use of these features.

Hyperlinks

Hyperlinks provide direct access to a specific destination when clicked. The entire Table of Contents of this manual is hyperlinked to provide quick access to all sections of this manual when viewing the electronic version.

Hyperlinks within the content are denoted by **blue, bold underlined text**. Electronic format viewers can click these links for direct access to New Leader online features. Internet access is required.

This page is intentionally left blank.

Insert Current HI-WAY Warranty

PLEASE ! ALWAYS THINK SAFETY FIRST !!

The purpose of this manual is to familiarize the person (or persons) using this unit with the information necessary to properly install, operate, and maintain this system. The safety instructions indicated by the safety alert symbol in the following pages supersede the general safety rules. These instructions cannot replace the following: the fundamental knowledge that must be possessed by the installer or operator, the knowledge of a qualified person, or the clear thinking necessary to install and operate this equipment. Since the life of any machine depends largely upon the care it is given, we require that this manual be read thoroughly and referred to frequently. If for any reason you do not understand the instructions, please call your authorized dealer or our Product Sales and Support Department at 1-888-363-8006.

It has been our experience that by following these installation instructions, and by observing the operation of the spreader, you will have sufficient understanding of the machine enabling you to troubleshoot and correct all normal problems that you may encounter. Again, we urge you to call your authorized dealer or our Product Sales and Support Department if you find the unit is not operating properly, or if you are having trouble with repairs, installation, or removal of this unit.

We urge you to protect your investment by using genuine NLM parts and our authorized dealers for all work other than routine care and adjustments.

New Leader Manufacturing reserves the right to make alterations or modifications to this equipment at any time. The manufacturer shall not be obligated to make such changes to machines already in the field.

This Safety Section should be read thoroughly and referred to frequently.

ACCIDENTS HURT !!!

ACCIDENTS COST !!!

ACCIDENTS CAN BE AVOIDED !!!

Important Safety Information

Figure 1.1 - The need for safety cannot be stressed strongly enough in this manual. At New Leader Manufacturing, we urge you to make safety your top priority when operating any equipment. We firmly advise that anyone allowed to operate this machine carefully read, learn and understand all messages and information in this manual and on machine's safety decals before operating machine, as well as familiarize themselves with the location and function of all machine controls.

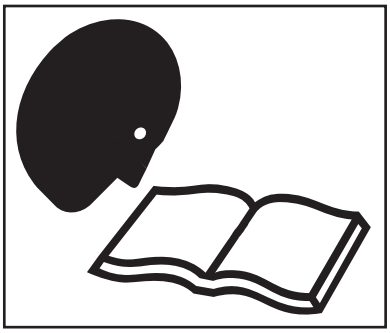

Figure 1.1

The following guidelines are intended to cover general usage and to assist you in avoiding accidents. There will be times when you will run into situations that are not covered in this section. At those times the best standard to use is common sense. If, at any time, you have a question concerning these guidelines, please call your authorized dealer or our Product Sales & Support Department at (800) 363-1771.

Safety Alert Symbols

TAKE NOTE! THIS SAFETY ALERT SYMBOL FOUND THROUGHOUT THIS MANUAL IS USED TO CALL YOUR ATTENTION TO INSTRUCTIONS INVOLVING YOUR PERSONAL SAFETY AND THAT OF OTHERS. FAILURE TO FOLLOW THESE INSTRUCTIONS CAN RESULT IN INJURY OR DEATH.

In this manual and on the safety signs placed on the unit, the words "DANGER," "WARNING," "CAUTION," and "NOTICE" are used to indicate the following:

DANGER	Indicates an imminently hazardous situation that, if not avoided, WILL result in death or serious injury. This signal word is to be limited to the most extreme situations and typically for machine components that, for functional purposes, cannot be guarded.
WARNING	Indicates a potentially hazardous situation that, if not avoided, COULD result in death or serious injury, and includes hazards that are exposed when guards are removed. It may also be used to alert against unsafe practices.
CAUTION	Indicates a potentially hazardous situation that, if not avoided, MAY result in minor or moderate injury. It may also be used to alert against unsafe practices.
NOTICE!	Is used for informational purposes in areas which may involve damage or deterioration to equipment but generally would not involve the potential for personal injury.
NOTE:	Provides additional information to simplify a procedure or clarify a process.

PREPARE FOR EMERGENCIES

Figure 1.2 - Be prepared if a fire starts. Keep a fully charged fire extinguisher and first aid kit in accessible place on the vehicle at all times.

Fire extinguisher must be Type ABC or Type BC.

Keep emergency numbers for doctors, ambulance service, hospital and fire department available at all times.

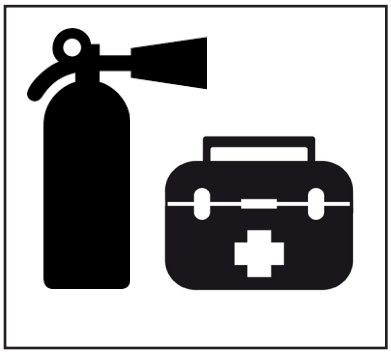

Figure 1.2

INSPECT HARDWARE BEFORE USE

Figure 1.3 - Inspect all bolts, screws, fasteners, keys, chain drives, body mounts and other attachments periodically. Immediately replace any missing or damaged parts immediately with proper specification parts.

Inspect spinner fins, spinner frame mounting and spinner fin hardware daily. Look for missing or loose fasteners, wear and cracks. Replace immediately if needed. Use only new SAE grade 5 or grade 8 screws and self-locking nuts.

Tighten all bolts, nuts and screws to specified torques. Refer to "Standard Torques" in Maintenance section of this manual.

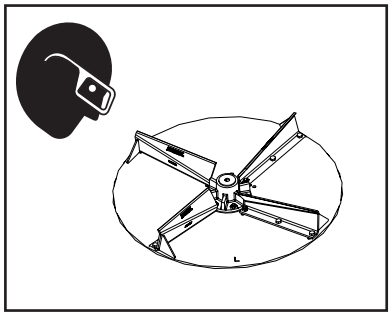

Figure 1.3

HANDLE FLAMMABLE MATERIALS SAFELY

Figure 1.4 - Handle fuel and hydraulic oil with care. They are highly flammable.

Always stop the engine before refueling machine or filling hydraulic reservoir.

Never smoke while adding fuel or oil to machine. Add fluids in a safe place away from open flame and sparks.

Do not allow overflow. Clean up spilled fuel and oil immediately.

Figure 1.4

Always have a multipurpose dry chemical fire extinguisher filled and available during machine operation and when adding fuel. Know how to use it.

HANDLE HAZARDOUS MATERIALS SAFELY

Figure 1.5 - Materials to spread can be dangerous.

Improper selection, application, use or handling may be a hazard to persons, animals, plants, crops or other property.

A Safety Data Sheet (SDS) provides specific details on chemical products: physical and health hazards, safety procedures and emergency response techniques.

Check the SDS before starting any job using a hazardous material. Follow all instructions and precautions given by the material manufacturer.

Figure 1.5

WORK IN WELL-VENTILATED AREAS

WARNING Never run machine engine inside a building unless adequate ventilation is provided to safely and properly remove exhaust fumes.

Figure 1.6 - Always work in a properly ventilated area.

Engine exhaust fumes can cause sickness or death. If it is necessary to run an engine in an enclosed area, use proper equipment to safely remove exhaust fumes from the working area.

Open building doors and get fresh air into the working area whenever possible.

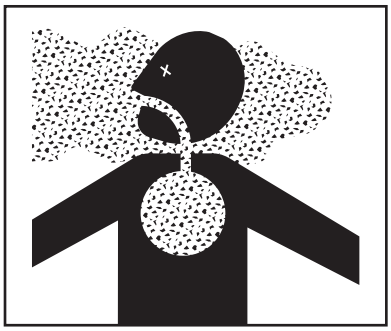

Figure 1.6

PROTECT AGAINST NOISE

Figure 1.7 - Long periods of exposure to high decibels or loud noise can cause hearing impairment or loss.

Wear proper hearing protection during periods of exposure to high decibels or loud noise.

Wear a proper hearing protective device such as earmuffs or earplugs to protect against high decibels and / or uncomfortable loud noises.

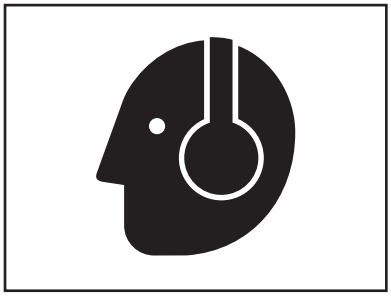

Figure 1.7

AVOID MOVING PART HAZARDS

Figure 1.8 - Entanglement in rotating drive lines or moving parts will cause serious injury or death.

Stay clear of all moving parts, such as shafts, couplings and universal joints.

Make sure all personnel are clear of machine before starting.

Figure 1.8

Figure 1.9 - Do not operate machine without all guards and shields closed and secured. Disconnect and lock out power source before removing guards.

Disconnect and lock out power source before adjusting or servicing.

Keep hands, feet, hair and clothing away from moving parts.

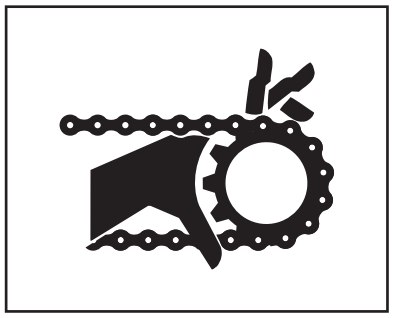

Figure 1.9

Figure 1.10 - Keep away from spinners while they are turning.

Rocks, scrap metal and other material can be thrown from the spinners violently. Stay away from discharge area.

Stop machine before servicing or adjusting. Wear eye protection.

Make sure discharge area is clear before spreading.

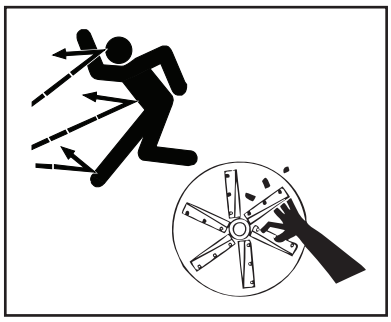

Figure 1.10

Figure 1.11 - Stay out of the spreader.

If it is necessary to enter the spreader, return to the shop, empty body, turn off all power, engage brakes, shut down engine and remove keys before entering.

Tag all controls to prohibit operation. Tags should only be placed, and later removed, by the person working in the body.

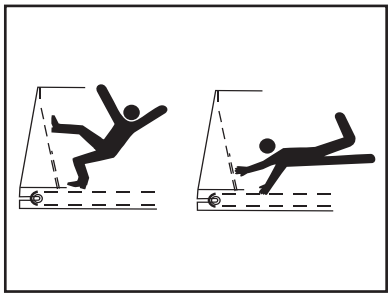

Figure 1.11

DO NOT CLIMB OR STAND ON MACHINE

Figure 1.12 - Never allow any personnel to ride in or on the machine.

Use only inspection ladder or portable ladder to view the unit. Use caution when getting on and off the ladder, especially in wet, icy, snowy or muddy conditions. Clean mud, snow and ice from steps and footwear.

Always maintain three-point contact with steps, ladders and handholds. Face the machine when mounting and dismounting inspection ladder. Do not jump off the machine.

Figure 1.12

OPERATE MACHINE SAFELY

Always walk around and visually inspect the machine before using. Check immediate vicinity of machine for people and obstructions. Ensure adequate visibility.

Avoid distractions such as reading, eating or operating personal electronics that take your attention away from operating the machine. Never operate the machine under the influence of alcohol, drugs or while otherwise impaired.

Always come to a complete stop before reversing. Be sure that all personnel are clear of machine path. Turn around and look directly for best visibility. Ensure all rear view mirrors are properly installed and adjusted. Use a signal person when backing if view is obstructed or when in close quarters.

Always disengage hydraulics before shutting down engine. DO NOT start engine with hydraulics engaged.

TRAVELING & TRANSPORTING ON PUBLIC ROADS

Always walk around and visually inspect the machine before traveling on public roads. Check for damage and/or faulty components that can fail and create a hazard or unsafe condition. Make sure all machine systems operate properly, including but not limited to: headlights, tail and brake lights, hazard warning lights, turn indicators, parking brake, horn and rear view mirrors. Repair or replace any component that is not in proper working order.

Never drive machine at a speed that causes it to bounce or cause loss of control.

Obey all traffic safety laws and regulations. Operate the machine with hazard warning lights on, unless prohibited by law. It is the operator's responsibility to activate and use road lights properly while traveling on public roads.

Cover all loads that may spill or blow away. Environmental damage may result. Do not spread dusty materials where dust may create pollution, visibility issues or interfere with traffic on public roads.

When transporting equipment or machine on a trailer, ensure it is properly secured. Be sure that SMV signs on equipment or machine are covered while in transport on a trailer.

Be aware of overhead structures and power lines. Make sure machine can safely pass under. Refer to "Dimensions & Capacities" pages in the Operations section of this manual.

NAVIGATING ROUGH & UNEVEN TERRAIN

Figure 2.1 - Turn slowly and be careful when traveling on rough surfaces and side slopes. Avoid holes, ditches and obstructions that may cause machine to roll over, especially with a loaded spreader.

Never drive near the edge of a gully or steep embankment.

Load may shift, causing vehicle to tip.

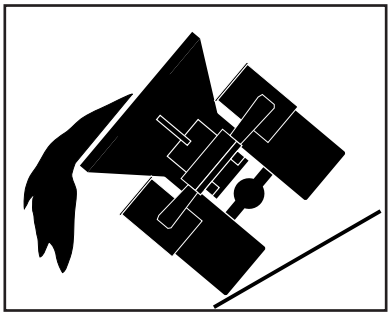

Figure 2.1

READ AND UNDERSTAND MAINTENANCE PROCEDURES

Figure 3.1 - Read the maintenance and safety instructions and understand them before performing any maintenance procedure.

Never perform any maintenance procedure or repair if the instructions and safety procedures are not fully understood. Only trained and qualified personnel should perform any maintenance procedure or repair.

Never modify any equipment or add attachments not approved by New Leader Manufacturing.

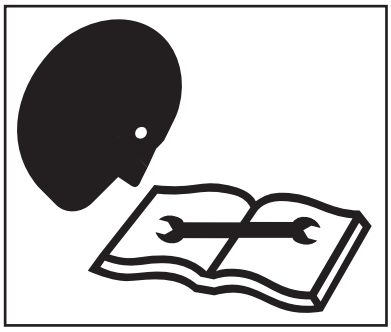

Figure 3.1

DO NOT SERVICE OR ADJUST MACHINE WHILE IN MOTION

Figure 3.2 - Never lubricate, service or adjust the machine or any of its components while they are moving.

Never wear loose clothing or jewelry when working near machine tools or moving parts.

Remove rings and other jewelry to prevent electrical shorts and other personal injury when in contact with machine tools or moving parts.

Close and secure all guards removed for service. Check all screws, bolts, nuts and fasteners for proper torques before operating machine.

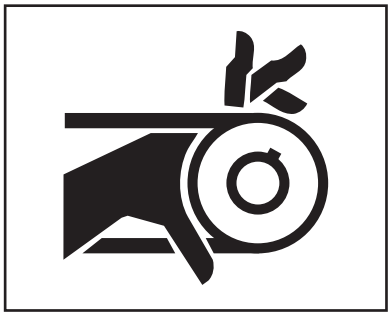

Figure 3.2

WEAR PROPER PROTECTIVE EQUIPMENT

Figure 3.3 - Wear close-fitting clothing and proper safety equipment for the job.

Always wear eye protection when working on or around the machine.

Wear a suitable hearing protection device such as earmuffs or earplugs to protect against high decibels or loud noises.

Prolonged exposure to high decibels or loud noise can cause hearing impairment or loss of hearing.

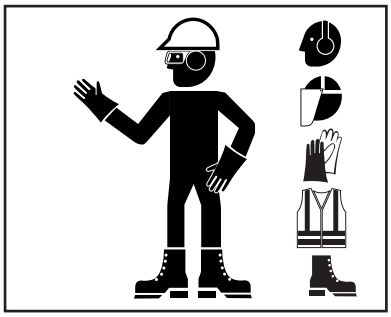

Figure 3.3

Wear protective gloves to protect hands from cuts, abrasions and minor burns.

HANDLE FLAMMABLE SOLVENTS SAFELY

Figure 3.4 - Never use diesel fuel, kerosene, gasoline or any flammable solvents for cleaning.

Perform work using flammable fluids and solvents in a safe place away from open flame and sparks. Do not smoke.

Do not weld, grind or flame cut on any tank containing oil, fuel, fumes or any other flammable material, or any container that contents or previous contents are unknown. Move all flammable materials and containers away from work area.

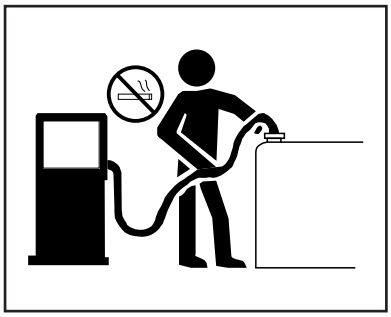

Figure 3.4

Clean up spilled fuel and oil immediately.

Always have a multipurpose dry chemical fire extinguisher filled and available. Know how to use it.

USE PROPER LIFTING EQUIPMENT

Figure 3.5 - Use only lifting devices that meet or exceed OSHA standard 1910.184 or ASME B30.20-2013.

Never lift equipment over people.

Never lift a loaded unit. Never lift unit with any loose objects or persons in the body. Loads may shift or fall if improperly supported, causing death, serious injury or machine damage.

Before unfastening heavy parts or assemblies, support with adequate hoist or other device to prevent falling, tipping, swinging or any other movement that may cause injury or damage.

Figure 3.5

USE PROPER TOOLS FOR THE JOB

Figure 3.6 - Use of improper tools (such as a screwdriver instead of a pry bar, pliers instead of a wrench, a wrench instead of a hammer) can cause serious injuries or machine damage.

Use power tools only to loosen threaded parts and fasteners. Using power tools to tighten may cause over-tightening and component damage.

Use only service parts meeting New Leader specifications.

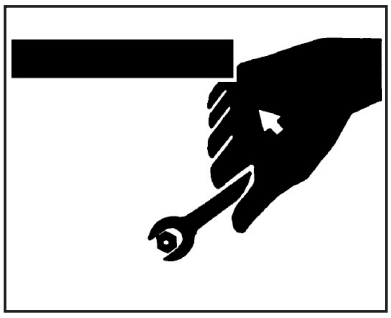

Figure 3.6

HIGH PRESSURE FLUID HAZARDS

Figure 3.7 - Escaping fluid under pressure can penetrate the skin causing serious injury.

Always stop machine, allow to cool and relieve pressure before servicing hydraulic system. Never open hydraulic lines under pressure. Make sure all connections are tight and all hoses are in good condition before pressurizing system.

Always use a piece of cardboard or wood to search for leaks instead of hand. Wear impervious gloves and eye protection when servicing system.

Seek medical attention immediately if fluid penetrates your skin. Gangrene may result if wound is left untreated.

Figure 3.7

AVOID HEATING NEAR HIGH PRESSURE FLUID LINES

Figure 3.8 - Flammable spray can be generated by heating near pressurized fluid lines, resulting in burns to yourself and bystanders.

Do not heat by welding, soldering or using a torch near pressurized fluid lines or other flammable materials.

Pressure lines can suddenly burst when heat goes beyond the immediate flame area.

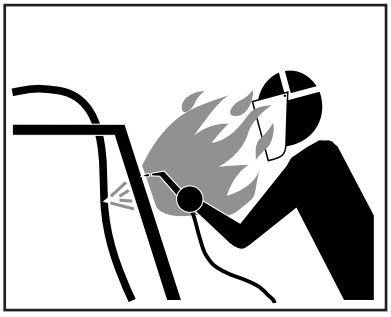

Figure 3.8

AVOID TOXIC FUMES & DUST

Figure 3.9 - Hazardous fumes can be generated when paint is heated from welding, soldering or using a torch.

Remove paint before heating:

- Remove a minimum of 4 in (100mm) from area to be affected by heating. If paint cannot be removed, wear an approved respirator while heating or welding.
- Avoid breathing dust from sanding or grinding on paint.
- If a solvent or paint stripper is used, wash stripper away with soap and water before heating or welding. Remove solvent or paint stripper containers and other flammable material from area. Allow fumes to disperse for at least 15 minutes before heating or welding.

Do not use chlorinated solvents in areas where welding will take place.

Perform all work in a well-ventilated area that willl carry all toxic fumes and dust away.

Figure 3.9

CLEAN MACHINE OF HAZARDOUS CHEMICALS

CAUTION	During application of hazardous chemicals, residue can build up on the inside or outside of the vehicle. Clean vehicle according to use instructions of hazardous chemical.

Figure 3.10 - When exposed to hazardous chemicals, clean exterior and interior of vehicle daily to keep free of the accumulation of visible dirt and contamination.

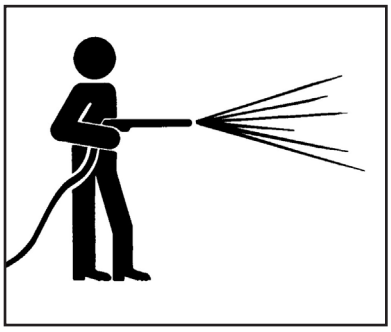

Figure 3.10

1. Clean operator's station to maintain unobstructed visibility of all windows and mirrors, and safe operation of all controls.

NOTICE!	Directing pressurized water at electronic/ electrical components, bearings and hydraulic seals or other sensitive parts and components may cause product malfunctions. Reduce pressure and spray at 45 to 90 degree angles.

2. Wash entire exterior of vehicle.
3. Dispose of any wash water with hazardous concentrations of active or non-active ingredients according to published regulations or directives.

HANDLE BATTERIES SAFELY

WARNING	Sulfuric acid in battery electrolyte is poisonous. It can burn skin, eat holes in clothing, and cause blindness if it contacts eyes.

Figure 3.11 - Lead acid batteries generate flammable and explosive gases. Keep sparks and flame away from batteries. Do not smoke.

If acid contacts eyes, skin or clothing, flush with water immediately. Seek immediate medical attention if acid contacts eyes.

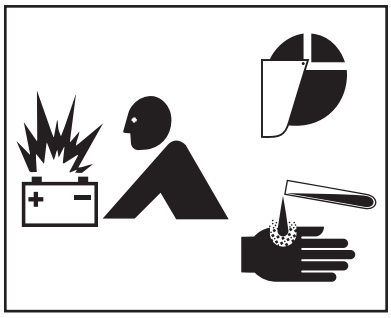

Figure 3.11

PROPER TIRE MAINTENANCE

Figure 3.12 - Never weld on a wheel or rim that has a tire on it.

Never attempt to mount or remove a tire unless using the proper equipment, tire safety cage, instructions, training, and you are qualified to perform the work safely. Failure to follow the correct procedures when mounting a tire on a wheel or rim can cause an explosion and serious injury.

Tire service procedures must be performed by trained and qualified personnel.

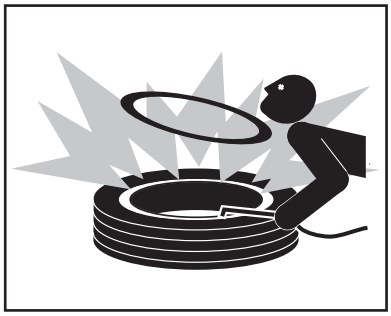

Figure 3.12

PARK VEHICLE SAFELY

Figure 4.1 - When leaving the vehicle unattended for any reason, be sure to:

- Shut down PTO.
- Shut off vehicle's engine, and unit's engine if applicable.
- Place vehicle transmission in "Neutral" or "Park".
- Set parking brake firmly.
- Remove ignition key and take it with you.
- Block wheels.

These actions are recommended to avoid unauthorized use, runaway, vandalism, theft and unexpected operation during startup.

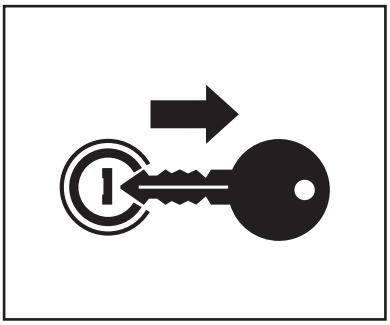

Figure 4.1

SUPPORT MACHINE PROPERLY

Figure 4.2 - When machine is removed from vehicle, always store on adequate supports on a firm level surface. Improper supporting or storage of spreader may cause machine to fall, resulting in serious injury or death.

Never use lifting device to free machine from a chassis, storage stands or frozen ground, or to lift the chassis in any way. Shock loading is prohibited and sudden accelerations must be avoided. Lifting in such a manner could result in injury or machine damage.

Figure 4.2

DISPOSE OF WASTE PROPERLY

Figure 4.3 - Improper disposal of waste can threaten the environment and ecology. Potentially harmful waste used with equipment include items such as fuel, oil, filters and batteries.

Use leakproof containers when draining fluids. Do not use food or beverage containers that may mislead someone into drinking from them. Do not pour waste onto the ground, down a drain, or into any water source.

Inquire on proper disposal methods from your local environmental or recycling center, or from your local dealer.

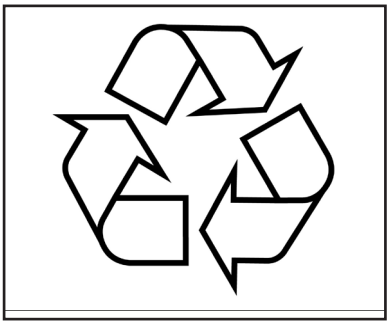

Figure 4.3

Safety Decal Maintenance

Keep safety decals and signs clean and legible at all times.

Replace safety decals and signs that are missing or have become illegible.

Replaced parts that displayed a safety sign should also display the current sign.

Safety decals or signs are available from your dealer's Parts Department or from New Leader Manufacturing by calling (800) 363-1771.

Safety Decal Installation

Clean Surface
Wash the installation surface with a synthetic, free-rinsing detergent. Avoid washing the surface with a soap containing creams or lotion. Allow to dry.

Position Safety Decal
Decide on the exact position before application. Application marks may be made on the top or side edge of the substrate with a lead pencil, marking pen, or small pieces of masking tape. NOTE: Do not use chalk line, china marker, or grease pencil. Safety decals will not adhere to these.

Remove the Liner
A small bend at the corner or edge will cause the liner to separate from the decal. Pull the liner away in a continuous motion at a 180-degree angle. If the liner is scored, bend at score and remove.

Apply Safety Decal
Tack decal in place with thumb pressure in upper corners. Using firm initial squeegee pressure, begin at the center of the decal and work outward in all directions with overlapping strokes. NOTE: Keep squeegee blade even—nicked edges will leave application bubbles. Pull up tack points before squeegeeing over them to avoid wrinkles.

Remove Pre-mask
If safety decal has a pre-mask cover remove it at this time by pulling it away from the decal at a 180 degree angle. NOTE: It is important that the pre-mask covering is removed before the decal is exposed to sunlight to avoid the pre-mask from permanently adhering to the decal.

Remove Air Pockets
Inspect the decal in the flat areas for bubbles. To eliminate the bubbles, puncture the decal at one end of the bubble with a pin (never a razor blade) and press out entrapped air with thumb moving toward the puncture.

Re-Squeegee All Edges


DANGER
MOVING PART HAZARD
To prevent death or serious injury:
• Stay out of box while conveyor is moving.
• Disconnect and lockout power source before adjusting or servicing.
• Do not ride on spreader.
364-C

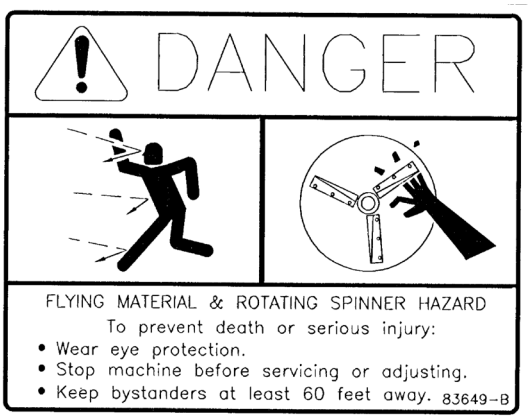
DANGER
FLYING MATERIAL & ROTATING SPINNER HAZARD
To prevent death or serious injury:
• Wear eye protection.
• Stop machine before servicing or adjusting.
• Keep bystanders at least 60 feet away.
83649-B


DANGER
EXPLOSION HAZARD
To prevent death or serious injury:
• Do not smoke while refueling.
• Keep smoking material, sparks and open flames away.
363-C

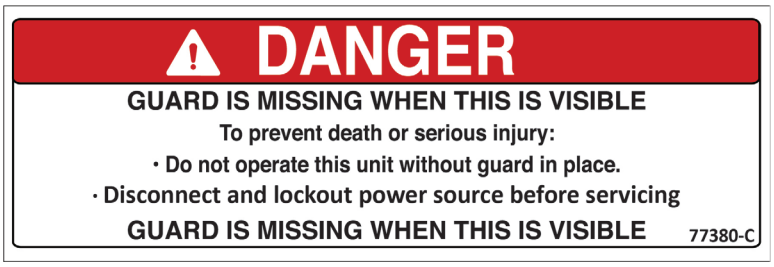
DANGER
GUARD IS MISSING WHEN THIS IS VISIBLE
To prevent death or serious injury:
· Do not operate this unit without guard in place.
· Disconnect and lockout power source before servicing
GUARD IS MISSING WHEN THIS IS VISIBLE
77380-C


WARNING
HIGH PRESSURE FLUID HAZARD
To prevent death or serious injury
• Do not check leaks with hands while system is operating as high pressure oil leaks can be dangerous!
• Relieve pressure before disconnecting hydraulic lines or working on system.
• Make sure all hydraulic fluid connections are tight and all hydraulic hoses and lines are in good condition before applying pressure to the system.
• Wear protective gloves and safety glasses or goggles when searching for leaks. Use wood or cardboard instead of hands.
• Do not use hydraulic lines for hand holds or steps.
• Components may be hot.
• Get immediate medical attention if skin is pierced with fluid as gangrene may result.
39138-D


WARNING
FALLING HAZARD
To prevent death, serious injury or machine damage:
• Do not stand or climb on guard.
55630-D

WARNING

MOVING PART HAZARD
To prevent death or serious injury:
- Close and secure guards before starting.
- Do not stand or climb on machine.
- Disconnect and lockout power source before adjusting or servicing.
- Keep hands, feet and hair away from moving parts.

55631-C

WARNING

MOVING PART HAZARD
To prevent death or serious injury:
- Close and secure guards before starting .
- Do not stand or climb on machine.
- Disconnect and lockout power source before adjusting or servicing.
- Keep hands, feet and hair away from moving parts.

79692-D

CAUTION

HAZARDOUS MATERIALS
To avoid injury or machine damage:
- Materials to be spread can be dangerous.
- Improper selection, application, use or handling may be a hazard to persons, animals, crops or other property.
- Follow instructions and precautions given by the material manufacturer.

321-C

CAUTION

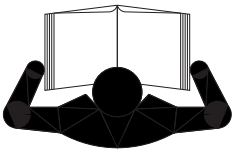

TO AVOID INJURY OR MACHINE DAMAGE:
- Do not operate or work on this machine without reading and understanding the operators manual.
- Keep hands, feet, hair and clothing away from moving parts.
- Do not allow riders on machine.
- Avoid unsafe operation or maintenance.
- Disengage power takeoff and shut off engine before removing guards, servicing or unclogging machine.
- Keep unauthorized people away from machine.
- Keep all guards in place when machine is in use.
- If manual is missing, contact dealer for replacement.

150034-C

NOTICE

- Use SAE 15W–40 for hydraulic fluid.
- Extreme operating temperatures may require a different viscosity oil range.
- Consult dealer for recommendation.

8665–D

NOTICE

Change filter element.

After the first 50 hrs.
and every 250 hrs. Thereafter

39378–F

NOTICE

Keep valve open
while pump is running.

8664–D

This page is intentionally left blank.

Recommended sequence of installation is:
1. Mounting of pump and pump drive.
2. Installation of spreader.
3. Installation of cab controls.
4. Connection of hydraulic and electrical systems.
5. Filling of hydraulic reservoir and initial lubrication.
6. Checking installation for leaks and proper functioning.
7. Installation of optional parts.

NOTICE! Pump and truck requirements must be determined prior to installation of the spreader.

Hydraulic Requirements

Hydraulics	GPM (LPM) (Gallons/Liters per Minute)	Maximum Pressure (PSI)
Super P (Single Hydraulics)	9 (34)	1500
Super P (Dual Hydraulics)	12(45)	

Truck Requirements

Before mounting the spreader on a truck, the following major questions must be considered:

1. Is the CA (Cab to Axle) dimension of the truck correct for the length of the spreader?

   The Dimensions and Capacities chart in the operator's manual will assist in matching spreader to truck.

2. Is the truck's GAWR (Gross Axle Weight Rating) and the GVWR (Gross Vehicle Weight Rating) adequate to carry the fully loaded spreader?

   Refer to your Hi-Way dealer to find the GAWR and GVWR for most trucks, and how to calculate the weight distribution on each axle and total loaded vehicle weight.

Truck Frame Length

Refer to "Dimensions & Capacities" section in the operator's manual for approximate length from the rear of the cab to the rear end of the frame. Shorten truck frame as necessary, making sure to follow truck manufacturer's specifications so as not to void truck warranty.

Lifting the Spreader

WARNING Use only lifting devices that meet or exceed OSHA standard 1910.84 or ASME B30.20-2006. Never lift equipment over people. Never lift unit with anything or anybody in the body. Loads may shift or fall if improperly supported, causing damage to unit, injury or even death.

CAUTION Do not use lifting device to free unit from a chassis, storage stands or frozen ground, or to lift the chassis in any way. Shock loading is prohibited and sudden accelerations should be avoided. Lifting in such a manner could result in damage to unit or injury.

Always inspect unit lift points for signs of wear, cracking, corrosion, gouges, alterations, or distortion.

Always use a sling, spreader bar, or lifting bar that attaches to the lifting points with a minimum of 60 degrees from horizontal. It is preferable to use an "H" style lifting bar that keeps the attaching chains in a near vertical orientation as shown in Figure 1. Operators of lifting devices must be qualified and knowledgeable in their use and application.

Position the truck with adequate room around the unit. Work in an environment that permits clear communication to others nearby. Keep area clear of persons when loads are to be lifted and suspended. Do not allow the lifted load to come in contact with any obstruction.

Store units on a solid surface using appropriate storage stands when not installed.

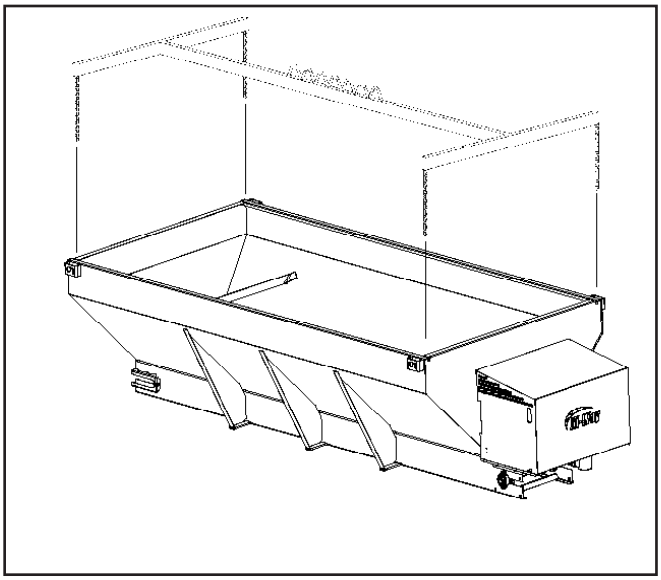

Figure 1 - Lifting Bar

Installing Body

CAUTION	Be careful when drilling so as to not damage truck frame, gas tank, or any other important components.

NOTICE!	DO NOT WELD ON VEHICLE FRAME! Such welding can lead to fatigue cracking and must be avoided.

NOTICE!	Connect welders ground directly to one of the items being welded anytime an arc welder is used on the vehicle or anything connected to the vehicle. Refer to Manufacturer's instructions.

IMPORTANT!	Disconnect electrical components from electrical system when welding on equipment to prevent component damage due to power surges or excessive current.

1. Lower the pickup or dump body tailgate. Remove the tailgate if it cannot be lowered into a horizontal position.
2. Carefully lift the spreader and set it in the truck box.
3. Center the spreader from side to side, and position it as far forward as possible, providing adequate clearance to mount spinner hopper.
4. Once spreader is positioned from front to rear, place wood blocks between the front of the spreader and the truck body to prevent spreader from sliding forward.
5. Using the four ratchet straps or chains and load binders supplied in the mounting kit, secure spreader to truck body at all four corners. Most truck bodies are built with standard anchor points for securing such loads. If truck body does not have sufficient mounting points, modify as necessary.

Spinner Hopper Installation

WARNING	Stay out from underneath spinner assembly when it is supported by hanger rod. Watch out for pinch points between the spinner assembly and the spreader or truck frame. They can cause injury to fingers or hands.

WARNING	Spinner must be in lowered and locked position when vehicle is moving. If the spinner lowers inadvertently, component damage or serious injury could occur.

Spinner disc should be approximately 18" (46cm) above the ground. If spinner is significantly higher than 18" (46cm), a 12" (31cm) extended hopper assembly is available. See "Spinner Hopper - Extended" parts page in parts manual.

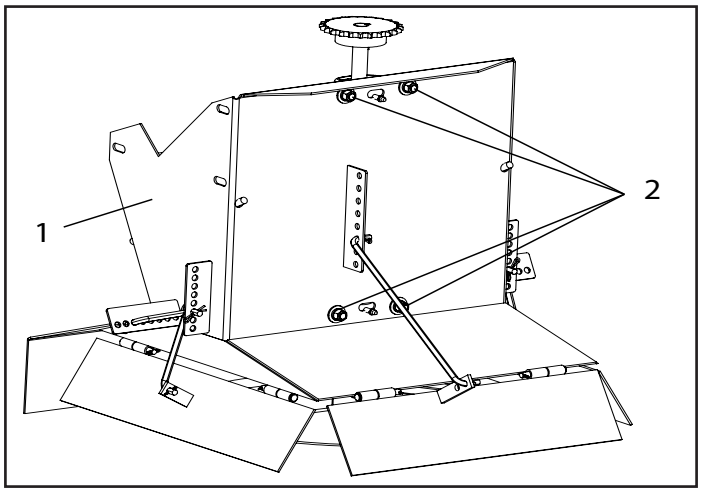

Figure 2 - Standard Spinner Hopper

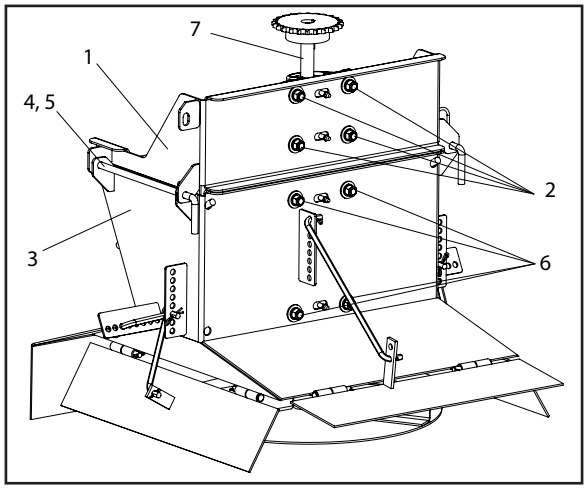

Figure 3 - Flip-Up Spinner Hopper

Standard Hopper

1. Position and install Spinner Hopper (1) to to rear of spreader using supplied hardware.
2. Loosen Bearing hardware (2) and and adjust shaft as necessary to install and tension Drive Chain. See Figure 4.

Flip-Up Hopper

1. Position and install Wrap Panel (1) to rear of spreader using supplied hardware.
2. Loosen Bearing hardware (2) and and adjust shaft as necessary to install and tension Drive Chain.
3. Align Mounting Ears of Hopper (3) with Wrap Panel (1) and secure by installing Spinner Rod (4) on one side and secure with Hairpin (5).
4. Loosen Lower Spinner Shaft Bearing hardware (6) and align Lower Spinner Shaft with Upper Shaft (7). Rotate Lower Shaft as necessary to couple shafts.
5. Secure opposite side of Spinner Hopper by inserting second Spinner Rod and secure with Hairpin.
6. Ensure Lower Spinner Shaft is vertical and properly aligned with Upper Shaft. Adjust bearings as necessary.

Chain Drive Tension

NOTICE!	Loose drive chain will cause shock loads, resulting in damage or failure of related components. Over-tightening of drive-chain causes excessive wear and heat, greatly reducing chain and sprocket life and may cause damage to other components.

Check drive chain tension between sprockets using a straight edge. When tensioned properly, one side of chain will deflect 5/16" (10 mm) between sprockets.

1. Adjust Spinner Shaft as necessary to tension chain. Moving shaft to left tightens chain; moving to right loosens.
2. Once properly tensioned, tighten all Spinner Shaft Bearing hardware to proper torque. Refer to "Standard Torques" in Maintenance section of operator's manual.

Cab Control Installation

When selecting a location for the spreader controls, consider the following:

1. Select a suitable location in the cab to mount the control, where it is easily accessible and visible to operator without obstructing normal driving view.
2. Check clearance with the driver's seat in all positions.
3. Check clearance with the transmission gear shift in all positions.
4. Check clearance with any other controls, such as parking brake or plow and wing controls.
5. For hydraulic control, check underneath cab for clearance with transmission and linkages, exhaust, etc.
6. Ensure that the control does not interfere with entering or leaving the cab.

CAUTION All holes in truck cab walls, floor and firewall are to be grommeted, plugged and sealed to prevent entrance of engine fumes, dust, dirt, water and noise.

Engine Drive

Control Panel

All wiring should be approved automotive insulated wire, secured adequately with insulating ties or straps, and located where it will not interfere with any control or access. Grommet all holes where wiring passes through cab floor or firewall to prevent wiring damage. Make sure wiring does not contact any moving parts or sharp edges and is kept away from hydraulic lines and heated parts.

7. Once control panel is properly mounted, route the engine control cable out of the cab to the left hand rear of the truck.
8. Install the supplied connector mounting bracket to the truck body where the engine harness can easily be connected.
9. Feed the cable from the cab control through the center hole of the mounting bracket, and trim to length as necessary.
10. Assemble connector to end of cab control harness as shown in Figure 4 and secure in mounting bracket.

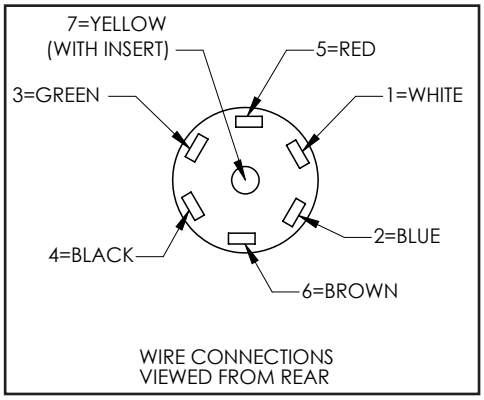

Figure 4

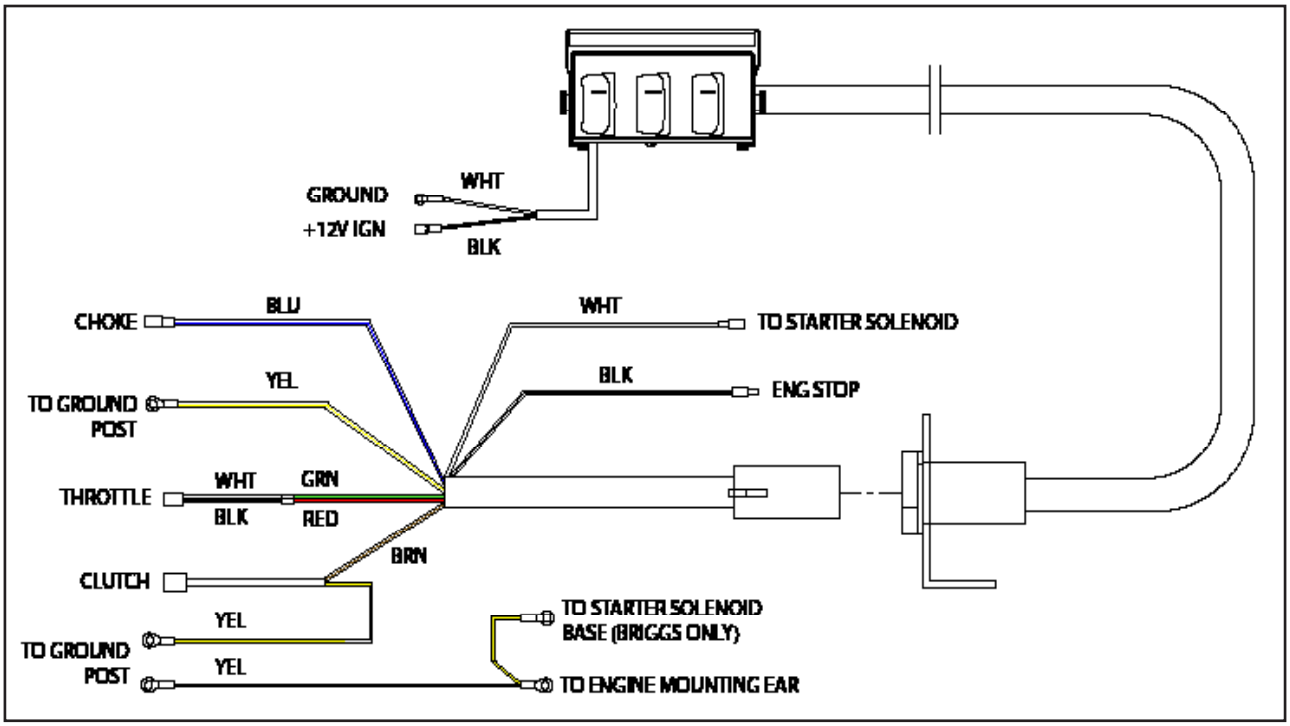

Figure 5

Engine Harness

1. Figure 4 - Connect the two-wire supply harness from the control panel to the truck.
   - Connect the black wire to a +12V switched ignition source. It is protected by a 10A fuse built into the control panel.
   - Connect the white wire to a clean chassis ground, or directly to the negative battery terminal.
2. Connect engine harness as shown in Figure 5. Connect 7 pin RV connector to control panel harness.

Hydraulic Drive

Control Valve

Mount the control valve in truck cab following considerations on previous page.

- Refer to "Hydraulics" section of parts manual for hydraulic system illustrations.
- An optional pedestal mount is available for the dual control valve. Refer to "Pedestal Mount Kit" in the parts manual for details.

Route Hydraulic Hoses from control valve as follows:

To/From	Dual Control Valve	Single Control Valve
Pressure	P	IN
Return to Reservoir	T	EX
Spinner Motor	S	CF
Conveyor Motor	A	

Hydraulic Hose Installation

CAUTION	If a threaded connection is tightened too tightly, the fitting or housing into which the fitting is placed could be distorted and an unstoppable leak could occur.

WARNING	Do not use one manufacturer's hose with another manufacturer's fittings! Such will void any warranty and may cause premature burst or leak of hydraulic fluids! Severe injury and/or fire could result!

Determine pressure port of pump. Install pressure hose into this port. Connect suction hose to opposite port and to tank outlet on hydraulic tank. Use plastic tie straps as necessary to support hoses so they will not catch on field obstructions or contact hot or moving parts.

Installation Guide

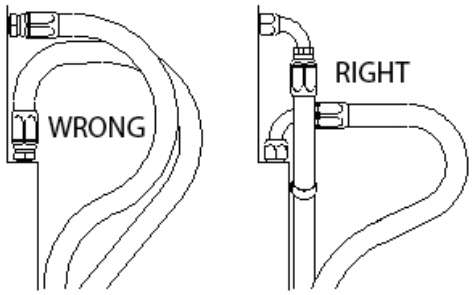	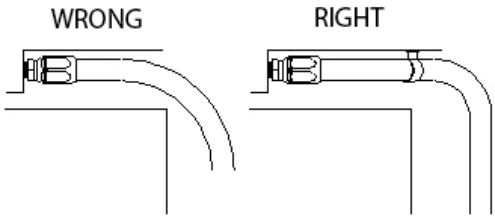
1. Use elbows and adapters in the installation to relieve strain on the assembly, and to provide easier and neater installations that are accessible for inspection and maintenance. Remember that metal end fittings cannot be considered as part of the flexible portion of the assembly.	2. Install hose runs to avoid rubbing or abrasion. Clamps are often needed to support long runs of hose or to keep hose away from moving parts. It is important that the clamps be of the correct size. A clamp that is too large will allow the hose to move in the clamp causing abrasion at this point.
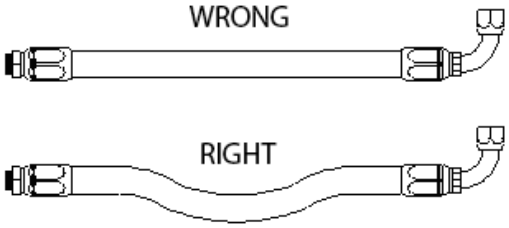	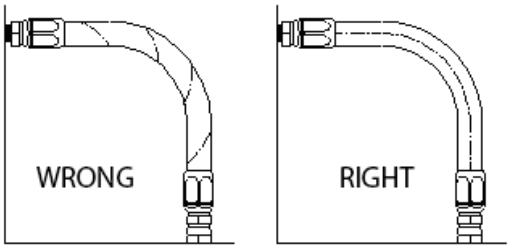
3. In straight hose installations allow enough slack in the hose line to provide for changes in length that will occur when pressure is applied. This change in length can be from +2% to -4%.	4. Do not twist hose during installation. This can be determined by the printed layline on the hose. Pressure applied to a twisted hose can cause hose failure or loosening of the connections.
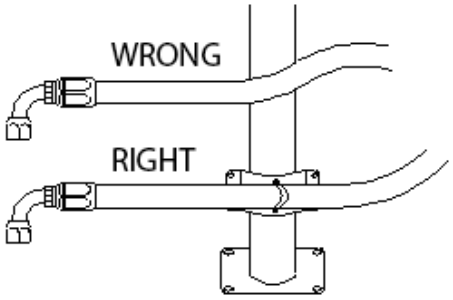	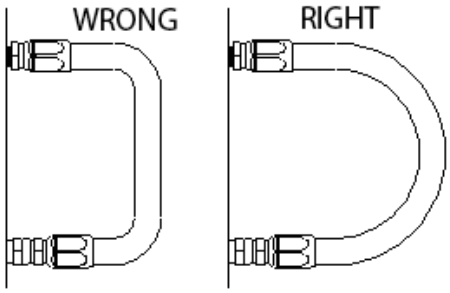
5. Keep hose away from hot parts. High ambient temperature will shorten hose life. If you cannot route it away from the heat source, insulate it.	6. Keep the bend radii of the hose as large as possible to avoid hose collapsing and restriction of flow. Follow catalog specs on minimum bend radii.

(Used with the permission of The Weatherhead Company.)

Filling Hydraulic System

NOTICE!	DO NOT attempt to run pump without first filling hydraulic oil tank and opening suction line valve, or damage to pump may occur.

Fill hydraulic reservoir with hydraulic oil as specified in the "Lubrication and Maintenance" section in the operator's manual. Be sure oil is clean, free from dirt, water and other contaminants.

Lubricate all points necessary per Lubrication Chart in "Lubrication and Maintenance" section of operator's manual.

Light Installation

CAUTION	All holes in truck cab walls, floor and firewall are to be grommeted, plugged and sealed to prevent entrance of engine fumes, dust, dirt, water and noise.

Light installation must comply with all applicable requirements prescribed by FMVSS/CMVSS 108, ASABE S279, state and local regulations. See "Lights" parts page in the operator's manual for illustrations if applicable.

Inverted "V"

Lower Inverted "V" into spreader hopper and install with supplied hardware. Refer to "Inverted "V"" parts page in parts manual for details.

Screens

Optional hopper screens are available to break up material chunks as hopper is loaded. See "Screens" parts pages for details.

Light Duty/Heavy Duty Screens

Light Duty/Heavy Duty screens require no hardware. Ensure that angles are tight against hopper side sheets and that screen is sitting flat and securely.

Flip-Up Screens

Install Pivot on top of side sheets and center from front to back. Install clamps (1) with supplied hardware to hold in place to side sheets as shown in Figure 6. Install screens to pivot using supplied hardware. See "Screens - Flip-Up" parts page for details.

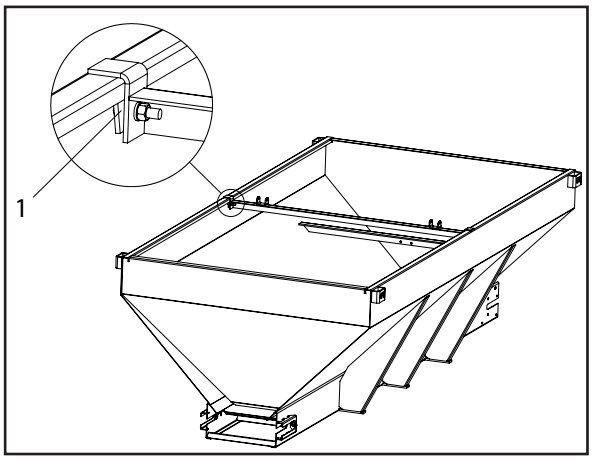

Figure 6

General Description

The Super P and Super P-HC are hopper-type spreaders and in many respects smaller versions of the Hi-Way Model E2020XT. They are intended for spreading abrasives and de-icing products for the control of snow or ice. The units can be mounted into a pick-up truck.

The Super P and Super P-HC are both offered with two different drive options, standard gas engine drive or optional hydraulic drive. Both spreaders are offered with two conveyor options, standard #1 bar chain conveyor, or optional Belt-Over-Chain (BOC) conveyor.

Options:

- The engine options are a 10.5 HP Briggs & Stratton (Super P ONLY) or 11 HP Honda (Super P or Super P-HC) four-cycle gasoline engine mounted at the rear. The engine drives a 20:1 worm gear case. The spinner is driven from the input shaft of the worm gear and the conveyor is driven from the output shaft. Variable speed control is obtained by the use of an electric throttle.
- The hydraulic options are single motor, dual motor or direct drive. The spinner is driven from the input shaft of a 20:1 worm gear case or directly driven by a hydraulic motor. The conveyor is driven from the output shaft of the worm gear or a hydraulic motor. Spinner and conveyor speed are adjusted by means of control valves.

The Super P with standard gas engine drive and #1 bar chain conveyor is designed to spread straight sand or a salt/sand mixture only. When applying straight salt, a BOC conveyor is required.

The Super P with optional dual hydraulic drive and #1 bar chain conveyor is designed to spread straight sand, a salt/sand mixture, or straight salt.

The conveyor runs the full length of the hopper bottom to deliver material through an adjustable feedgate to the spinner.

The spinner hopper has two internal baffles and three external baffles for adjusting the spread to the desired pattern.

This product is intended for commercial use only.

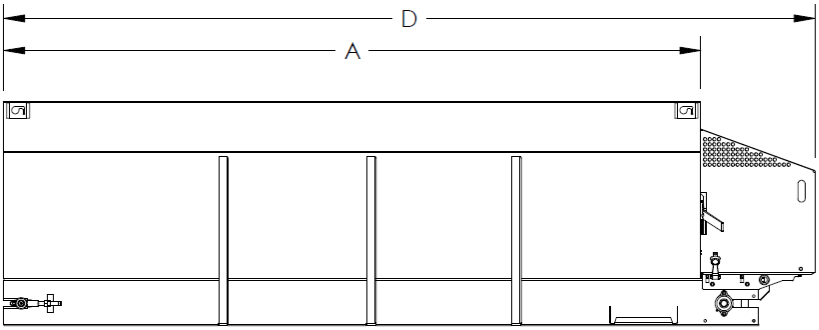

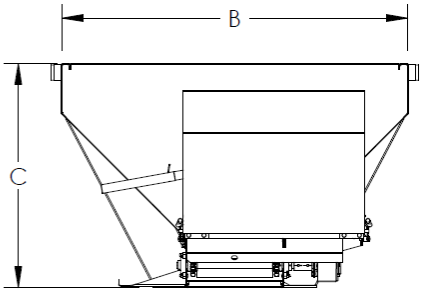

UNIT LENGTH Feet (m) A	INSIDE WIDTH Inches (mm) B	HEIGHT Inches (mm) C	OVERALL LENGTH Inches (mm) D	WEIGHT (EMPTY) Pounds (kg)	STRUCK CAPACITY cu ft (cu m)
7 (2.13)	59.5 (1511)	39 (991)	104 (2642)	795 (362)	64 (1.8)
8 (2.44)	59.5 (1511)	39 (991)	116 (2946)	895 (406)	74 (2.1)
9 (2.74)	59.5 (1511)	39 (991)	128 (3251)	995 (451)	81 (2.3)
9 (2.74)	80.0 (2032)	43 (1092)	128 (3251)	1105 (501)	109 (3.1)
10 (3.05)	59.5 (1511)	39 (991)	140 (3556)	1095 (497)	88 (2.5)
10 (3.05)	80.0 (2032)	43 (1092)	140 (3556)	1205 (547)	120 (3.4)
11 (3.35)	59.5 (1511)	39 (991)	152 (3861)	1200 (544)	98 (2.8)
11 (3.35)	59.5 (1511)	33 (838)	152 (3861)	1185 (538)	65 (1.8)
12 (3.66)	59.5 (1511)	39 (991)	164 (4166)	1305 (592)	104 (2.95)

Check over entire unit to be sure all fasteners are in place and properly tightened per "Standard Torques" in this manual. Check to ensure that load straps/chains are tight and that unit is securely mounted in the truck.

Prior to testing the unit, ensure the controller is in the off position. Do not load the hopper.

1. Check to be sure that no loose parts or other material is in the hopper body, spinner hopper or on the spinner disc.
2. Raise the feedgate until it is completely clear of the conveyor.

Auxiliary Engine Driven Units

3. Check the oil level in the auxiliary engine crankcase. Add oil if necessary. Refer to "Lubricant & Hydraulic Oil Specifications" in the Lubrication and Maintenance section of this manual, or the engine manufacturer's manual.
4. Be sure all bearings, shafts and gearcase are properly lubricated.
5. Check for proper alignment between conveyor and spinner sprockets and between engine and conveyor sprockets. Ensure sprocket set screws are properly tightened.

Ensure drive chain tension is correct. Refer to "Installation" section for details.

A loose drive chain will cause shock loads, resulting in damage or failure of related components. Over-tightening of drive chain causes excessive wear and heat, greatly reducing chain and sprocket life and may cause damage to other components of the drive system.

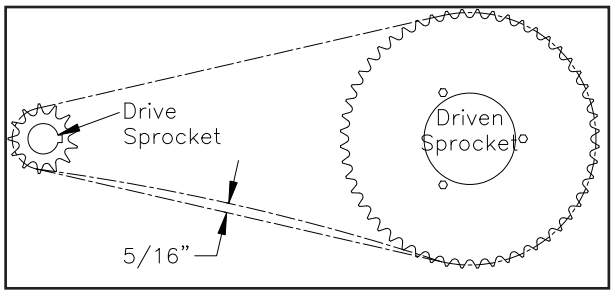

Figure 1 - Adjusting Chain Tension

WARNING Stay clear of moving machinery.

6. Start auxiliary engine and allow it to warm up to operating temperature at idle speed. Actuate electric clutch switch if so equipped.
7. Bring auxiliary engine up to speed. Conveyor and spinner should operate smoothly at normal operating speeds.

DANGER Stay clear of the spinner when it is operating. Contact with a moving spinner can cause serious injury.

WARNING Shut down engine before servicing unit. When making adjustments to the engine that require it to be running, remove the drive chain before performing the service.

Hydraulic Driven Units

1. Fill the hydraulic reservoir with oil. Refer to "Lubricant & Hydraulic Oil Specifications" section in this manual for proper oil. Open gate valve fully (rotate counterclockwise to open).
2. Be sure all bearings, shafts and gearcase are properly lubricated.
3. Check for proper alignment between spinner sprockets. Check to ensure sprocket set screws are tightened sufficiently.
4. Start engine. Engage PTO or actuate electric clutch (if applicable). Let engine run at about 1000 RPM for several minutes, allowing hydraulic oil to reach operating temperature. Allow greater warm-up time in colder weather.

5. Check for proper rotation of conveyor and spinner. The conveyor should move towards the rear. The spinner should rotate clockwise when viewed from the top. If unit runs backwards, the hydraulic system is assembled incorrectly. Shut unit down and determine problem. Correct the problem before further operation. Check reservoir and refill as necessary after unit has been running long enough to circulate oil through all lines.

DANGER	Stay clear of spinner when it is operating. Contact with a moving spinner can cause severe injury.

6. Move hydraulic control valve to position 3. Conveyor and spinner should run at low speed. Allow to run until they operate smoothly to indicate air has been purged from the system.

DANGER	Do not check leaks with hands while system is operating as high pressure leaks can be dangerous! If skin is pierced with hydraulic fluid at high pressure seek immediate medical attention as fluid injected into the skin could cause gangrene if left untreated. Relieve pressure before disconnecting hydraulic lines or working with system. Make sure all hydraulic fluid connections are tight and all hydraulic hoses and lines are in good condition before applying pressure to the system. Wear protective gloves and safety glasses or goggles when working with hydraulic systems.

WARNING	DO NOT check for hydraulic leaks adjacent to moving parts while system is operating as there may be danger of entanglement!

7. Bring engine speed up (about 3000 RPM) and move hydraulic control valve to position 5. Run a few minutes to be sure unit runs smoothly. Shut the system down. When all parts have come to rest, check all hydraulic system connections for leaks.
8. Check hydraulic oil level. Add oil as necessary. For units with NLM-supplied hydraulic reservoirs, oil should be visible in the bottom of the strainer basket when the reservoir cap is removed. Unit is now ready for road testing.

CAUTION To avoid spreader coming loose from truck: Be sure all fasteners are torqued to proper spec before operating unit. Periodically check ratchet straps to ensure they are tight and secure.

CAUTION Be careful where you spread materials. Avoid operating near or around personnel.

Before taking the unit out to use, make a walk-around inspection to assure that the spreader is not damaged, that all essential parts are in place, and that all fasteners are tight and all guards are in place. Check all controls to be sure they are operating correctly.

General Rules

When spreading straight salt, a minimum 2" (51mm) feedgate opening must be maintained.

Always use the highest feedgate setting and slowest conveyor speed to achieve desired application rate. Following this simple rule will reduce tension and duty cycles on the conveyor and conveyor drive components, resulting in maximum service life.

Using poor quality material with inconsistent particle size will cause an increased load on the conveyor and conveyor drive system. If poor quality material must be used, a BOC conveyor is recommended.

Spread Pattern Adjustments

Fill the body with material and start the engine. Before spreading, some preliminary adjustments are necessary to give an even spread pattern.

The spread pattern is adjusted by using the internal and external baffles. The spread pattern is dependant on the positions of the baffles.

For setting the desired spread pattern, consider the following:

- Direction of pattern - Right, left or centered.
- Pattern width.
- Nearby pedestrians, vehicles or other property in in the direct path of material spread.

For a centered spread pattern that provides sufficient coverage at intersections, while still limited to prevent injury to pedestrians or property damage, use of all spinner hopper baffles is required.

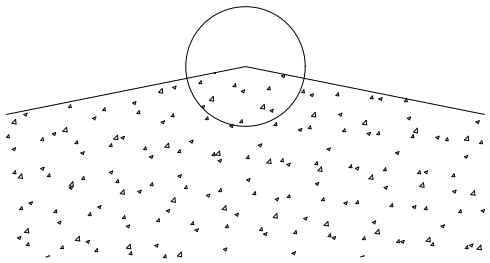

Internal Baffle Effect
Both internal baffles up. Pattern width depends on engine RPM. External baffles full up.

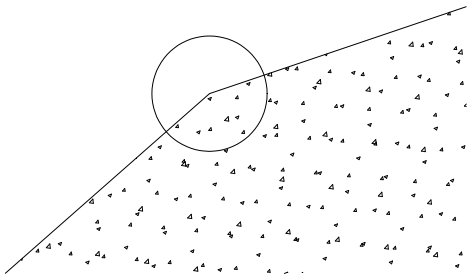

Internal Baffle Effect
Right baffle full up, left down. Pattern width depends on engine RPM. External baffles full up.

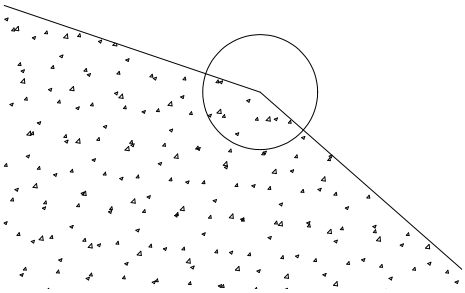

Internal Baffle Effect
Left baffle full up, right down. Pattern width depends on engine RPM. External baffles full up.

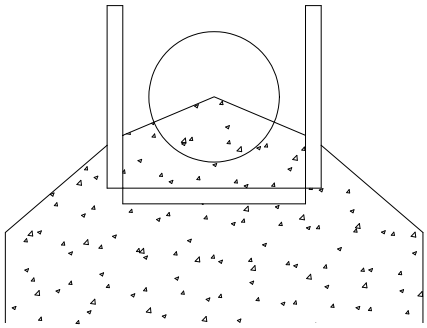

External Baffle Effect
All baffles properly adjusted for a confined spread pattern.

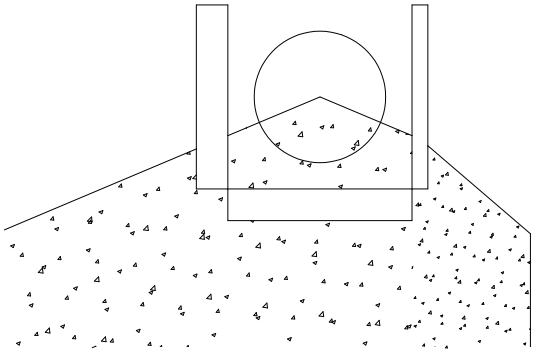

External Baffle Effect
Right-hand baffle deflects material down. Heavy application on RH side. Adjust internal baffles to minimize streaking.

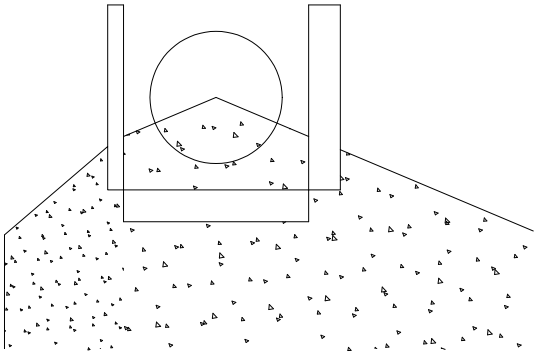

External Baffle Effect
Left-hand baffle deflects material down. Heavy application on LH side. Rear baffle is necessary to control double coverage area.

Auxiliary Engine Driven Units

Engine Preparation

CAUTION Never fill the tank with the engine running. Avoid spilling gasoline on a hot engine. This could cause an explosion and serious injury. Do not smoke while handling gasoline.

Release the two clamps holding the engine hood and swing the hood rearward and downward. Check the crankcase oil level. Refer to Lubrication Chart for details. Refer to engine manufacturer's manual for the proper amount and grade of oil. Fill crankcase as required.

Fill the fuel tank according to engine manual. Make sure the fuel shut-off valve is open if so equipped.

Starting Starter-Alternator-Type Engines

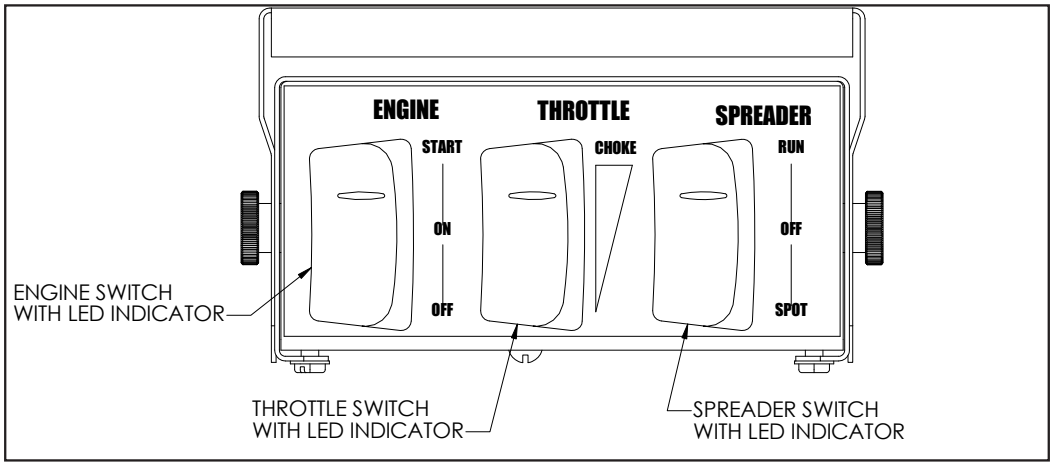

Figure 2 – Control Panel

Engine switch - Starts and stops engine.

Throttle switch - Controls engine speed.

Push top of switch to choke—light illuminates when engine in choke.

Back off from choke to run RPM.

Spreader switch - Controls conveyor and spinner function—light illuminates when spreading.

Run - Maintained switch for continuous spreading.

Off - Turns both conveyor and spinner off.

Spot - Momentary switch for "spot" spreading.

NOTICE! Do not run engine in choke.

1. Place engine switch in "On" position.
2. Press top of throttle switch 5–10 seconds for choke. Note: If switch has LED indicator, light will illuminate when unit is in choke.
3. Press engine "Start" until engine runs.
4. Press bottom of throttle switch to take engine out of choke. Note: If switch has LED indicator, light turns off when unit is out of choke.

Electric Clutch Operation

1. Set throttle to a fast idle, engage clutch, and bring engine RPM up to spreading speed. The clutch draws current only when engaged.
2. The clutch may be engaged or disengaged at any time. However, it is suggested that the clutch NOT be engaged with the engine operating at high speed. Component damage may occur from excessive shock loads to the system. Drive to the area to be spread.
3. Open the feedgate to give the desired amount of material. The unit will deliver one cubic foot per minute at 3600 engine RPM with the feedgate open only 1/2" (13mm). It will deliver at a rate of 6.3 cubic feet per minute with a 4-1/4" (108mm) feedgate opening at the same engine speed. The delivery rate of material is determined by engine RPM and feedgate opening together.
4. Adjust engine throttle to desired speed and drive ahead.
5. When the pass is completed return engine to an idle. Disengage electric clutch.

Hydraulic Driven Units

1. Engage hydraulic pump. Allow system to run for several minutes to bring hydraulic oil up to operating temperature.
2. When ready to spread, turn on the control valve. Set desired spinner and conveyor speed as applicable.
3. Begin spreading.
4. Turn off control valve and disengage PTO when finished spreading.

System Operating Parameters

Operating pressure:	900 - 1200 PSI (62-82.75 bar)
Relief at:	1500 PSI (103.42 bar)
Flow, Single:	8.25 GPM (31.23 LPM)
Flow, Dual:	12 GPM (45.42 LPM)

Preventative Maintenance Pays!

The handling and spreading of salt and sand is a highly severe operation with respect to metal corrosion. Establish a frequent, periodic preventative maintenance program to prevent rapid deterioration to equipment. Proper cleaning, lubrication and maintenance will yield longer life, more satisfactory service and more economical use of your equipment.

WARNING Shut off all power and allow all moving parts to come to rest before performing any maintenance operation.

WARNING Shut off all power and allow all moving parts to come to rest before performing any maintenance operation. Otherwise, you could be injured.

Drive Chains

CAUTION Make sure truck engine is shut down when working on drive chain. If drive chain moves, you could be injured.

Twice a year remove drive chains. Soak chain in a solvent to remove all old or contaminated oil. Check chain for any frozen links. Soak chain in SAE 10 oil. Soak chain until, when flexed, no bubbles appear on chain. Reinstall chains. Chain should be tensioned enough to prevent whipping at operating speed. Over-tensioning of chain will create excessive heat that will freeze chain or cause damage to other parts of drive system.

Engine

Refer to engine maintenance instructions furnished by engine manufacturer.

Hydraulic System

The use of proper oil in the hydraulic system is one of the most important factors for satisfactory operation. Utmost cleanliness in handling the oil cannot be stressed enough. Keep the hydraulic oil in original closed containers, clean top of container before opening and pouring, and handle in extremely clean measures and funnels.

Refer to the Lubricant and Hydraulic Oil Specifications section of the manual for selection of the proper hydraulic fluid for use in the hydraulic system.

DANGER Do not check leaks with hands while system is operating as high pressure leaks can be dangerous! If skin is pierced with hydraulic fluid at high pressure seek immediate medical attention as fluid injected into the skin could cause gangrene if left untreated. Relieve pressure before disconnecting hydraulic lines or working with system. Make sure all hydraulic fluid connections are tight and all hydraulic hoses and lines are in good condition before applying pressure to the system. Wear protective gloves and safety glasses or goggles when working with hydraulic systems.

WARNING DO NOT check for hydraulic leaks adjacent to moving parts while system is operating as there may be danger of entanglement!

Service Schedule

1. Check the hydraulic oil daily. Add oil if required. Periodically inspect the hoses and fittings for leaks.

NOTICE!	CHANGE THE HYDRAULIC OIL FILTER AFTER THE FIRST WEEK (OR NOT MORE THAN 50 HOURS) OF OPERATION ON A UNIT.

2. After first filter change, replace filter when indicator reaches Danger Zone.
3. The reservoir should be drained through drain plug (not through suction outlet), flushed, and refilled annually, or the oil should be changed if it shows any signs of breaking down under continued high-pressure operation. Discoloration of oil is one sign of breakdown.

Hydraulic Hose

Hose assemblies in operation should be inspected frequently for leakage, kinking, abrasion, corrosion or other signs of wear or damage. Worn or damaged hose assemblies should be replaced immediately.

WARNING	Testing should be conducted in approved test stands with adequate guards to protect the operator.

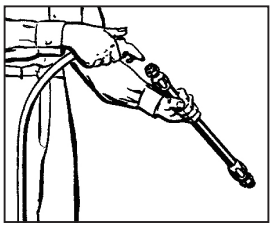

Clean
Clean assembly by blowing out with clean compressed air. Assemblies may be rinsed out with mineral spirits if the tube stock is compatible with oil, otherwise hot water at 150°F (65.55° C) maximum may be used.

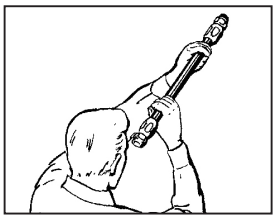

Inspect
Examine hose assembly internally for cut or bulged tube, obstructions, and cleanliness. For segment style fittings, be sure that the hose butts up against the nipple shoulder; band and retaining ring are properly set and tight, and segments are properly spaced. Check for proper gap between nut and socket or hex and socket. Nuts should swivel freely. Check the layline of the hose to be sure the assembly is not twisted. Cap the ends of the hose with plastic covers to keep clean.

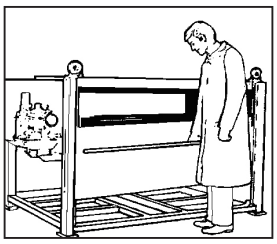

Test
The hose assembly should be hydrostatically tested at twice the recommended working pressure of the hose.
Test pressure should be held for not more than one minute and not less than 30 seconds. When test pressure is reached, visually inspect hose assembly for: 1. Any leaks or signs of weakness. 2. Any movement of the hose fitting in relation to the hose. Any of these defects are cause for rejection.

Storage and Handling

Hose should be stored in a dark, dry atmosphere away from electrical equipment, and the temperature should not exceed 90° F (32.22° C).

Conveyor Gearcase

Drain oil in a new unit after first two weeks (or not more than 100 hours) of operation, and flush gear case thoroughly with light oil. Refer to "Lubricant and Hydraulic Oil Specifications" section for proper grade oil and recommended amounts of lubricant. After initial change, oil should be changed every 2,000 hours of operation or annually, whichever occurs first.

Check gearcase oil level monthly.

Lubrication of Bearings

Grease in a bearing acts to prevent excessive wear of parts, protects ball races and balls from corrosion and aids in preventing excessive heat within the bearing. It is very important the grease maintains its proper consistency during operation. It must not be fluid and it must not channel.

Make sure all fittings are thoroughly cleaned before grease is injected. Points to be lubricated by means of a grease gun have standard grease fittings.

Lubricate bearings by pumping grease slowly until it forms a slight bead around the seals. This bead indicates adequate lubrication and also provides additional protection against the entrance of dirt.

Fasteners

Tighten all screw fasteners to recommended torques after first week of operation and annually thereafter. If loose fasteners are found at anytime, tighten to recommended torque. Replace any lost or damaged fasteners or other parts immediately. Check body mounting hardware every week.

Clean-Up

NOTICE!	High pressure wash can inject water and/or salt into bearing seals and control components, causing damage. Use caution when cleaning these areas.

Thoroughly wash unit every two to three days during the operating season to maintain minimal maintenance operation. Hose unit down under pressure to free all sticky and frozen material.

It is important the unit be thoroughly cleaned at the end of each operating season. All lubrication and maintenance instructions should be closely followed. Repaint worn spots to prevent formation of rust.

Conveyor Chain

Hose down unit and remove any material build-up on sprockets and under chain.

NOTICE!	The conveyor will move away from the bottom panel if material accumulates under the conveyor or on the sprockets. The more material that accumulates, the closer the chain will come to the chain shields. If the conveyor should catch a chain shield, it could permanently damage the conveyor, the chain shields or the unit. Do not remove material while conveyor or spinner is running!

Lubricate conveyor chain at least once a week. Shut down spinner and run conveyor slowly to lubricate chain. Use a mixture of 75% diesel fuel and 25% SAE 10 oil in a pressurized hand spray gun. Spray oil mixture between links of chain through openings provided at rear end of sill or from front outside body when clearance is adequate. Do this at least once a week and after each unit washing. Allow to dry before lubricating.

DANGER	Stay out of body when conveyor is running. Stay clear of all moving parts. Entanglement of clothes, any part of your body or anything you have in your hands can cause serious injury. Do not use bar, rod or hammer on conveyor while it is moving—if it gets caught it could cause injury!

Proper chain tension is also a factor in chain and sprocket life. The proper chain tension is illustrated in Figure 1. Be sure the chain is tensioned equally on both sides. This adjustment is made on each side of the unit at the idler bearings.

Figure 4 - Chain Tension to be Measured from Rear of Sill - Proper Tension 26" to 30" (660 to 762 mm).

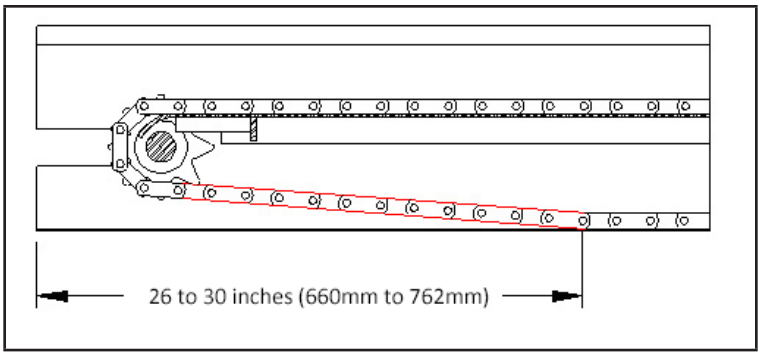

Figure 1 - Adjusting Chain Tension

Conveyor chains that are too tight will tend to stretch. This will cause excess sprocket wear and eventually cause breakage. Excess slack presents the possibility of the chain catching on sub-frame parts. Bent or distorted chain bars will cause damage to the body as well. Straighten or replace bent or distorted chain bars immediately.

Conveyor Replacement

Check drive and idler sprockets for wear and replace if necessary.

Removal

Remove spinner hopper from vehicle. Take spreader out of truck. Rotate conveyor so that connecting link pins, attached with cotter pins, can be accessed at rear of spreader. Loosen idler screws on both sides. If BOC, cut one end of lacing pin and remove spice pin. Remove cotter pins and connecting link pins at rear of unit. Take chain off rear sprockets and pull chain from front of unit.

Installation

1. Remove connecting link pins from the new chain. Lay the new chain at the front of the unit with the chain bars up/HI-WAY stamps down and the barrel end of the connecting link pointing towards the unit (See Figure 2).
   NOTE: Installation is easier if the new conveyor can be elevated so it is level with the spreader bottom.
2. Insert the conveyor between the bottom panel and the cross angles with the barrel end first. Pull conveyor to rear of unit.
3. Slide the remaining half of conveyor on top of the bottom panel with the open end of the master link first (See Figure 5).
4. Push the chain along the bottom panel until the connecting link reaches the rear of the unit so the ends meet at rear.
5. Make sure the chain is positioned on all the sprockets. Install the connector link pins previously removed.
   NOTE: you may have to rotate the sprockets by hand to align the link's pin holes.

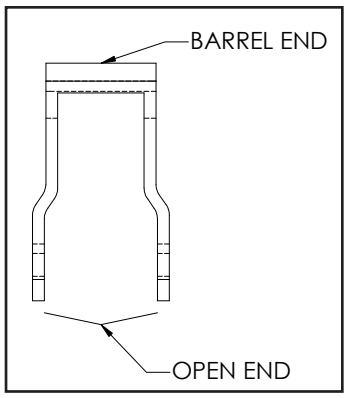

Figure 2 – Chain Link

Tension the chain by tightening the idler screws. Reinstall spinner assembly and install the spreader into the truck. Be sure to lubricate the idler bearings and chain before operation.

Make sure the drive sprocket drives against the barrel end of the links—Not against the connecting pins.

Open ends of chain links point towards rear of unit on top of bottom panel. Likewise, open ends point towards front of unit underneath bottom panel.

NOTICE!	The lubricant distributor and/or supplier is to be held responsible for the results obtained from their products. Procure lubricants from distributors and/or suppliers of unquestionable integrity, supplying known and tested products. Do not jeopardize your equipment with inferior lubricants. No specific brands of oil are recommended. Use only products qualified under the following oil viscosity specifications and classification recommended by reputable oil companies.

Engine

Refer to engine manufacturer's manual for oil recommendations.

Hydraulic System

The following are the recommended procedures for selecting the proper hydraulic fluid for use in the hydraulic system. Select a major brand industrial PREMIUM QUALITY (anti-wear type) hydraulic oil to provide viscosity between 100-200 SSU at operating temperature. Premium hydraulic oils with viscosity indexes of 95 or above will provide the following temperature ranges :

INDUSTRY IDENTIFICATION VISCOSITY GRADE	OPERATING TEMPERATURE	VISCOSITY
150 SSU	122° F (50° C) 84° F (28.9° C)	100 SSU 200 SSU
225 SSU	140° F (60° C) 107° F (41.7° C)	100 SSU 200 SSU
300 SSU	150° F (66.6° C) 116° F (46.1° C)	100 SSU 200 SSU
450 SSU	165° F (73.9° C) 130° F (54.5° C)	100 SSU 200 SSU
600 SSU	182° F (83.3° C) 145° F (62.8° C)	100 SSU 200 SSU

If, because of necessity or convenience, it is desirable to use an automotive engine oil, multi-viscosity oils of SC rating (formerly MS quality) which will provide between 100-200 SSU at operating temperature can be used. These will provide proper viscosity over a wide range. For example:

SAE VISCOSITY GRADE	OPERATING TEMPERATURE	VISCOSITY
10W-30	130° F (54.5° C)	100 SSU
	100° F (37.8° C)	200 SSU
10W-40	190° F (87.8° C)	100 SSU
	140° F (60° C)	200 SSU

Gearcase Lubricant

Gear cases are factory equipped with synthetic oil for best performance at high loads. Lubricate the gear case with multi-purpose gear lubricating oil conforming to MIL-L2105B according to the chart below:

Part	Refill Quantity	40° to 120° F (4.5° C)	Below 40° F (49° C)
Gearcase	.75 pints (.35 liters)	SAE 85W 140	SAE 88W 90

Grease Gun Lubricant

Use a waterproof ball and roller bearing lithium base lubricant with a minimum melting point of 300° F (149° C). This lubricant should have a viscosity which assures easy handling in the pressure gun at prevailing atmospheric temperatures. The grease should conform to NLGI No. 2 consistency.

Lubrication Chart

WARNING Shut off all power and allow all moving parts to come to rest before performing any maintenance operation.

The spreader should be regularly lubricated with the lubricants recommended in this manual in accordance with the following chart:

LOCATION	PLACES	METHOD	FREQUENCY
Hydraulic Pump Drive			
Transmission PTO - Slip Joint	1	Grease	Weekly
Transmission PTO - U-Joint	2	Grease Gun	Monthly
Hydraulic System			
Reservoir	1	Check Daily; Change Annually	
Filter	1	Check Daily; Change when indicator is red	
Drive Chains			
Main Drive Chain - Engine to Gearcase	1	Spray Oil	Daily
Spinner Drive Chain - Gearcase to Spinner	1	Spray Oil	Daily
Conveyor			
Dragshaft Bearings	2	Grease Gun	Weekly
Idler Adjuster	2	Hand Grease	Weekly
Idler Shaft Bearing	2	Grease Gun	Weekly
Chain	2 Strands	Spray Oil	Weekly
Input Shaft Bearing - Gearcase	1	Grease Gun	Weekly
Gearcase	1	Fill Through Vent Plug	Check monthly; Change annually.
Spinner			
Shaft Bearings	2	Grease Gun	Weekly

NOTE: Unusual conditions, such as excessive dust, temperature extremes or excessive moisture may require more frequent lubrication of specific parts.

* See "Lubricant and Hydraulic Oil Specifications" for types of lubricants and oil to be used.

SYMPTOM	REASON/CORRECTION
Unit speed does not increase with the dial setting.	a. Increase truck engine speed. b. Check condition of pump. c. Check for adequate PTO percentage.
Unit stalls under load.	Check circuit pressure. 900 - 1200 PSI (62 - 83 bar) maximum with relief valve dumping at 1500 PSI (103.5 bar).
Unit speed fluctuates momentarily when main control is first turned on.	a. Cold hydraulic oil. Wait until oil has reached operating temperature. b. Change to a lighter weight oil.
Pump blows seals at start-up.	Pump installed backwards. Replace seals and reverse pump in drive line (note directional arrow on pump).

Standard Torques

CAP SCREW GRADE IDENTIFICATION - MARKINGS ON HEAD

SAE GRADE 2 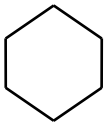 NO MARKINGS

SAE GRADE 5 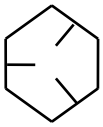 THREE MARKS - 120 DEGREES APART

SAE GRADE 8 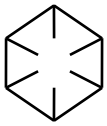 SIX MARKS - 60 DEGREES APART

USE GRADE 2 TORQUES FOR STAINLESS STEEL FASTENERS AND CARRIAGE BOLTS.

	TORQUE - FOOT-POUNDS					
CAP SCREW SIZE	GRADE 2		GRADE 5		GRADE 8	
	DRY	LUBE	DRY	LUBE	DRY	LUBE
1/4″	5	4	8	6	12	9
5/16″	11	8	17	13	25	18
3/8″	20	15	30	23	45	35
7/16″	30	24	50	35	70	55
1/2″	50	35	75	55	110	80
9/16″	65	50	110	80	150	110
5/8″	90	70	150	110	220	170
3/4″	100	120	260	200	380	280
7/8″	140	110	400	300	600	460
1″	220	160	580	440	900	650