Hi-Way XT3 TYPE III
Operator's Manual

UNIT SERIAL NUMBER _____

MANUAL NUMBER: 316536-A

EFFECTIVE 05/2019

NEW LEADER MANUFACTURING

1330 76TH AVE SW
CEDAR RAPIDS, IA 52404-7052
PHONE (800) 363-1771 | FAX (319) 286-3350
www.newleader.com

Copyright 2019 Highway Equipment Company, Inc.
Now doing business as New Leader Manufacturing

Table of Contents

Interactive Features 4
Warranty 6
Preface 7
Safety 8
- Important Safety Information 8
- Safety Alert Symbols 8

General Safety Rules 9
Safety Decals 19
- Safety Decal Maintenance 19
- Safety Decal Installation 19

Informational Decals 24
General Description 25
Dimensions & Capacities 26
Initial Startup 28
General Operating Procedures 29
- Adjustments 29
- Tailgate 30
- Rear Spinner 30
- Feedgate 30
- Dumping 31
- Metering With Coal Chute Feedgate 32
- Tailgate Air Kit 32
- Spreading 32

Lubrication & Maintenance 33
- Preventative Maintenance Pays! 33
- Hydraulic System 33
- Hydraulic Hose 34
  - Storage and Handling 34
- Conveyor Chain 34
  - Lubrication 35
  - Tension 36
  - Main Conveyor 36
- Tailgate & Tailgate Latch 37
- Bearings 37
- Bushings 37
- Hoist Cylinder 37
- Fasteners 37
- Clean-Up 37

Lubricant & Oil Specifications 38
- Hydraulic System 38
- Gearcase Lubricant 38
- Grease Gun Lubricant 38

Lubrication & Maintenance Chart 39
Troubleshooting 40
Standard Torques 41

Table of Contents

Instructions for Ordering Parts 43
- Cradle 44
- Hinge 46
- Body Props 47
- Ladder 48
- Cab Shield 49
- Side Boards - Bolt-In 50
- Mounting 52
- Lighting & Visibility 53

Lubrication 54
- Body Lubrication 54

Tailgate 57
- Tailgate Latch 57
- Tailgate - w/ Feedgate 58
- Feedgate - Rear 60
- Single Lift 62
- Domed 64

Conveyor 66
- #4 Belt-Over-Chain Conveyor 66
- #3 Bar Chain Conveyor 67
- Drive/Idler 68
- Chain Shield - #4 BOC 72
- Chain Shield - #4 BOC Cont. 73
- Chain Shield - #3 Bar Chain 74
- Chain Shield - #3 Bar Chain Cont. 75
- Conveyor Cover 76
- Conveyor Chain Oiler 77
- Conveyor Pans 78

Rear Spinner 79
- Spinner Frame & Patch Pan 79
- Spinner Assembly - w/ Baffles 81
- Spinner Assembly - w/o Baffles 83

Decals 86

Pre-Wet 88
- Reservoir - Fender Mount 88

Accessories 90
- Side Discharge Chute 90
- Patch Pan 91
- Sand Bagger 92

NOTE:	This manual incorporates several interactive features to provide supplemental information and ease of navigation. The information below is to aid in the identification and use of these features.

Hyperlinks

Hyperlinks provide direct access to a specific destination when clicked. The entire Table of Contents of this manual is hyperlinked to provide quick access to all sections of this manual when viewing the electronic version.

Hyperlinks within the content are denoted by **blue, bold underlined text**. Electronic format viewers can click these links for direct access to New Leader online features. Internet access is required.

This page is intentionally left blank.

Insert Current HI-WAY Warranty

PLEASE ! ALWAYS THINK SAFETY FIRST !!

The purpose of this manual is to familiarize the person (or persons) using this unit with the information necessary to properly install, operate, and maintain this system. The safety instructions indicated by the safety alert symbol in the following pages supersede the general safety rules. These instructions cannot replace the following: the fundamental knowledge that must be possessed by the installer or operator, the knowledge of a qualified person, or the clear thinking necessary to install and operate this equipment. Since the life of any machine depends largely upon the care it is given, we require that this manual be read thoroughly and referred to frequently. If for any reason you do not understand the instructions, please call your authorized dealer or our Product Sales and Support Department at 1-888-363-8006.

It has been our experience that by following these installation instructions, and by observing the operation of the spreader, you will have sufficient understanding of the machine enabling you to troubleshoot and correct all normal problems that you may encounter. Again, we urge you to call your authorized dealer or our Product Sales and Support Department if you find the unit is not operating properly, or if you are having trouble with repairs, installation, or removal of this unit.

We urge you to protect your investment by using genuine NLM parts and our authorized dealers for all work other than routine care and adjustments.

New Leader Manufacturing reserves the right to make alterations or modifications to this equipment at any time. The manufacturer shall not be obligated to make such changes to machines already in the field.

This Safety Section should be read thoroughly and referred to frequently.

ACCIDENTS HURT !!!

ACCIDENTS COST !!!

ACCIDENTS CAN BE AVOIDED !!!

Important Safety Information

Figure 1.1 - The need for safety cannot be stressed strongly enough in this manual. At New Leader Manufacturing, we urge you to make safety your top priority when operating any equipment. We firmly advise that anyone allowed to operate this machine carefully read, learn and understand all messages and information in this manual and on machine's safety decals before operating machine, as well as familiarize themselves with the location and function of all machine controls.

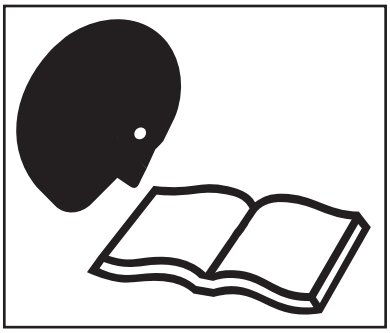

Figure 1.1

The following guidelines are intended to cover general usage and to assist you in avoiding accidents. There will be times when you will run into situations that are not covered in this section. At those times the best standard to use is common sense. If, at any time, you have a question concerning these guidelines, please call your authorized dealer or our Product Sales & Support Department at (800) 363-1771.

Safety Alert Symbols

TAKE NOTE! THIS SAFETY ALERT SYMBOL FOUND THROUGHOUT THIS MANUAL IS USED TO CALL YOUR ATTENTION TO INSTRUCTIONS INVOLVING YOUR PERSONAL SAFETY AND THAT OF OTHERS. FAILURE TO FOLLOW THESE INSTRUCTIONS CAN RESULT IN INJURY OR DEATH.

In this manual and on the safety signs placed on the unit, the words "DANGER," "WARNING," "CAUTION," and "NOTICE" are used to indicate the following:

DANGER	Indicates an imminently hazardous situation that, if not avoided, WILL result in death or serious injury. This signal word is to be limited to the most extreme situations and typically for machine components that, for functional purposes, cannot be guarded.
WARNING	Indicates a potentially hazardous situation that, if not avoided, COULD result in death or serious injury, and includes hazards that are exposed when guards are removed. It may also be used to alert against unsafe practices.
CAUTION	Indicates a potentially hazardous situation that, if not avoided, MAY result in minor or moderate injury. It may also be used to alert against unsafe practices.
NOTICE!	Is used for informational purposes in areas which may involve damage or deterioration to equipment but generally would not involve the potential for personal injury.
NOTE:	Provides additional information to simplify a procedure or clarify a process.

PREPARE FOR EMERGENCIES

Figure 1.2 - Be prepared if a fire starts. Keep a fully charged fire extinguisher and first aid kit in accessible place on the vehicle at all times.

Fire extinguisher must be Type ABC or Type BC.

Keep emergency numbers for doctors, ambulance service, hospital and fire department available at all times.

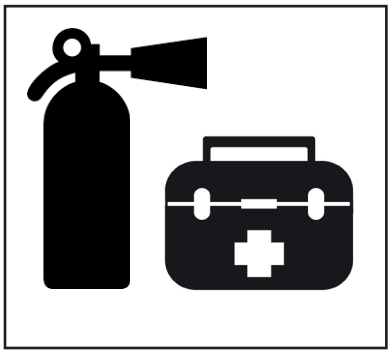

Figure 1.2

INSPECT HARDWARE BEFORE USE

Figure 1.3 - Inspect all bolts, screws, fasteners, keys, chain drives, body mounts and other attachments periodically. Immediately replace any missing or damaged parts immediately with proper specification parts.

Inspect spinner fins, spinner frame mounting and spinner fin hardware daily. Look for missing or loose fasteners, wear and cracks. Replace immediately if needed. Use only new SAE grade 5 or grade 8 screws and self-locking nuts.

Tighten all bolts, nuts and screws to specified torques. Refer to "Standard Torques" in Maintenance section of this manual.

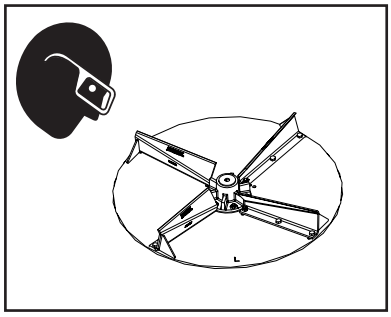

Figure 1.3

HANDLE FLAMMABLE MATERIALS SAFELY

Figure 1.4 - Handle fuel and hydraulic oil with care. They are highly flammable.

Always stop the engine before refueling machine or filling hydraulic reservoir.

Never smoke while adding fuel or oil to machine. Add fluids in a safe place away from open flame and sparks.

Do not allow overflow. Clean up spilled fuel and oil immediately.

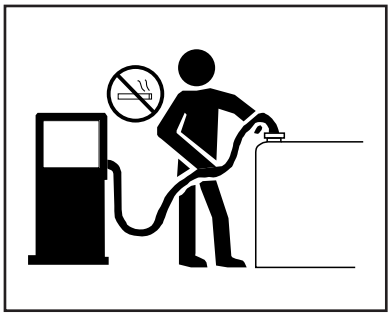

Figure 1.4

Always have a multipurpose dry chemical fire extinguisher filled and available during machine operation and when adding fuel. Know how to use it.

HANDLE HAZARDOUS MATERIALS SAFELY

Figure 1.5 - Materials to spread can be dangerous.

Improper selection, application, use or handling may be a hazard to persons, animals, plants, crops or other property.

A Safety Data Sheet (SDS) provides specific details on chemical products: physical and health hazards, safety procedures and emergency response techniques.

Check the SDS before starting any job using a hazardous material. Follow all instructions and precautions given by the material manufacturer.

Figure 1.5

WORK IN WELL-VENTILATED AREAS

WARNING Never run machine engine inside a building unless adequate ventilation is provided to safely and properly remove exhaust fumes.

Figure 1.6 - Always work in a properly ventilated area.

Engine exhaust fumes can cause sickness or death. If it is necessary to run an engine in an enclosed area, use proper equipment to safely remove exhaust fumes from the working area.

Open building doors and get fresh air into the working area whenever possible.

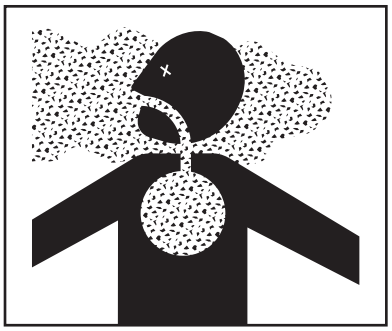

Figure 1.6

PROTECT AGAINST NOISE

Figure 1.7 - Long periods of exposure to high decibles or loud noise can cause hearing impairment or loss.

Wear proper hearing protection during periods of exposure to high decibels or loud noise.

Wear a proper hearing protective device such as earmuffs or earplugs to protect against high decibels and / or uncomfortable loud noises.

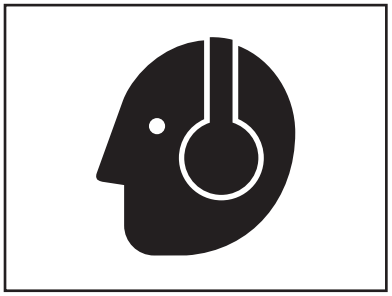

Figure 1.7

AVOID MOVING PART HAZARDS

Figure 1.8 - Entanglement in rotating drive lines or moving parts will cause serious injury or death.

Stay clear of all moving parts, such as shafts, couplings and universal joints.

Make sure all personnel are clear of machine before starting.

Figure 1.8

Figure 1.9 - Do not operate machine without all guards and shields closed and secured. Disconnect and lock out power source before removing guards.

Disconnect and lock out power source before adjusting or servicing.

Keep hands, feet, hair and clothing away from moving parts.

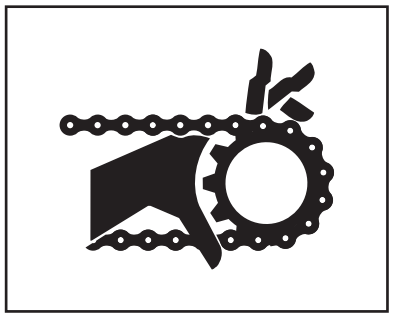

Figure 1.9

Figure 1.10 - Keep away from spinners while they are turning.

Rocks, scrap metal and other material can be thrown from the spinners violently. Stay away from discharge area.

Stop machine before servicing or adjusting. Wear eye protection.

Make sure discharge area is clear before spreading.

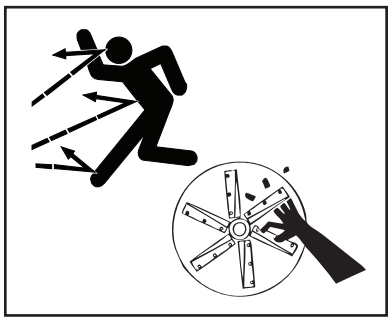

Figure 1.10

Figure 1.11 - Stay out of the spreader.

If it is necessary to enter the spreader, return to the shop, empty body, turn off all power, engage brakes, shut down engine and remove keys before entering.

Tag all controls to prohibit operation. Tags should only be placed, and later removed, by the person working in the body.

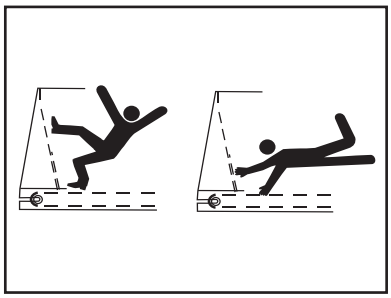

Figure 1.11

DO NOT CLIMB OR STAND ON MACHINE

Figure 1.12 - Never allow any personnel to ride in or on the machine.

Use only inspection ladder or portable ladder to view the unit. Use caution when getting on and off the ladder, especially in wet, icy, snowy or muddy conditions. Clean mud, snow and ice from steps and footwear.

Always maintain three-point contact with steps, ladders and handholds. Face the machine when mounting and dismounting inspection ladder. Do not jump off the machine.

Figure 1.12

OPERATE MACHINE SAFELY

Always walk around and visually inspect the machine before using. Check immediate vicinity of machine for people and obstructions. Ensure adequate visibility.

Avoid distractions such as reading, eating or operating personal electronics that take your attention away from operating the machine. Never operate the machine under the influence of alcohol, drugs or while otherwise impaired.

Always come to a complete stop before reversing. Be sure that all personnel are clear of machine path. Turn around and look directly for best visibility. Ensure all rear view mirrors are properly installed and adjusted. Use a signal person when backing if view is obstructed or when in close quarters.

Always disengage hydraulics before shutting down engine. DO NOT start engine with hydraulics engaged.

TRAVELING & TRANSPORTING ON PUBLIC ROADS

Always walk around and visually inspect the machine before traveling on public roads. Check for damage and/or faulty components that can fail and create a hazard or unsafe condition. Make sure all machine systems operate properly, including but not limited to: headlights, tail and brake lights, hazard warning lights, turn indicators, parking brake, horn and rear view mirrors. Repair or replace any component that is not in proper working order.

Never drive machine at a speed that causes it to bounce or cause loss of control.

Obey all traffic safety laws and regulations. Operate the machine with hazard warning lights on, unless prohibited by law. It is the operator's responsibility to activate and use road lights properly while traveling on public roads.

Cover all loads that may spill or blow away. Environmental damage may result. Do not spread dusty materials where dust may create pollution, visibility issues or interfere with traffic on public roads.

When transporting equipment or machine on a trailer, ensure it is properly secured. Be sure that SMV signs on equipment or machine are covered while in transport on a trailer.

Be aware of overhead structures and power lines. Make sure machine can safely pass under. Refer to "Dimensions & Capacities" pages in the Operations section of this manual.

NAVIGATING ROUGH & UNEVEN TERRAIN

Figure 2.1 - Turn slowly and be careful when traveling on rough surfaces and side slopes. Avoid holes, ditches and obstructions that may cause machine to roll over, especially with a loaded spreader.

Never drive near the edge of a gully or steep embankment.

Load may shift, causing vehicle to tip.

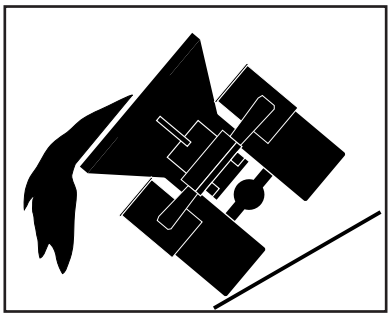

Figure 2.1

READ AND UNDERSTAND MAINTENANCE PROCEDURES

Figure 3.1 - Read the maintenance and safety instructions and understand them before performing any maintenance procedure.

Never perform any maintenance procedure or repair if the instructions and safety procedures are not fully understood. Only trained and qualified personnel should perform any maintenance procedure or repair.

Never modify any equipment or add attachements not approved by New Leader Manufacturing.

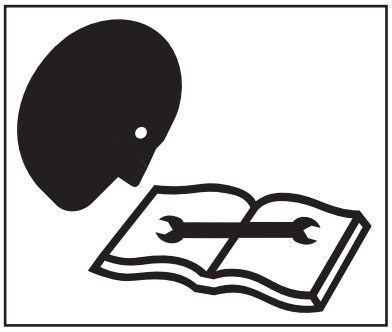

Figure 3.1

DO NOT SERVICE OR ADJUST MACHINE WHILE IN MOTION

Figure 3.2 - Never lubricate, service or adjust the machine or any of its components while they are moving.

Never wear loose clothing or jewelry when working near machine tools or moving parts.

Remove rings and other jewelry to prevent electrical shorts and other personal injury when in contact with machine tools or moving parts.

Close and secure all guards removed for service. Check all screws, bolts, nuts and fasteners for proper torques before operating machine.

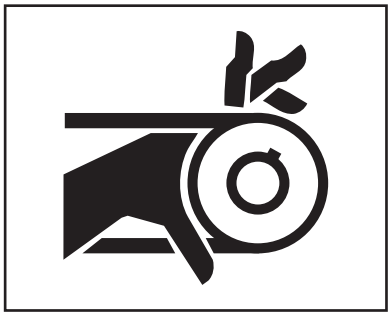

Figure 3.2

WEAR PROPER PROTECTIVE EQUIPMENT

Figure 3.3 - Wear close-fitting clothing and proper safety equipment for the job.

Always wear eye protection when working on or around the machine.

Wear a suitable hearing protection device such as earmuffs or earplugs to protect against high decibels or loud noises.

Prolonged exposure to high decibels or loud noise can cause hearing impairment or loss of hearing.

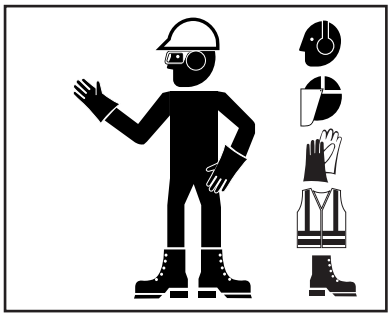

Figure 3.3

Wear protective gloves to protect hands from cuts, abrasions and minor burns.

HANDLE FLAMMABLE SOLVENTS SAFELY

Figure 3.4 - Never use diesel fuel, kerosene, gasoline or any flammable solvents for cleaning.

Perform work using flammable fluids and solvents in a safe place away from open flame and sparks. Do not smoke.

Do not weld, grind or flame cut on any tank containing oil, fuel, fumes or any other flammable material, or any container that contents or previous contents are unknown. Move all flammable materials and containers away from work area.

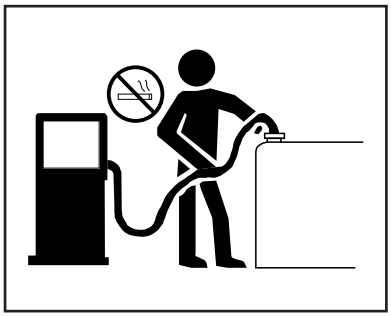

Figure 3.4

Clean up spilled fuel and oil immediately.

Always have a multipurpose dry chemical fire extinguisher filled and available. Know how to use it.

USE PROPER LIFTING EQUIPMENT

Figure 3.5 - Use only lifting devices that meet or exceed OSHA standard 1910.184 or ASME B30.20-2013.

Never lift equipment over people.

Never lift a loaded unit. Never lift unit with any loose objects or persons in the body. Loads may shift or fall if improperly supported, causing death, serious injury or machine damage.

Before unfastening heavy parts or assemblies, support with adequate hoist or other device to prevent falling, tipping, swinging or any other movement that may cause injury or damage.

Figure 3.5

USE PROPER TOOLS FOR THE JOB

Figure 3.6 - Use of improper tools (such as a screwdriver instead of a pry bar, pliers instead of a wrench, a wrench instead of a hammer) can cause serious injuries or machine damage.

Use power tools only to loosen threaded parts and fasteners. Using power tools to tighten may cause over-tightening and component damage.

Use only service parts meeting New Leader specifications.

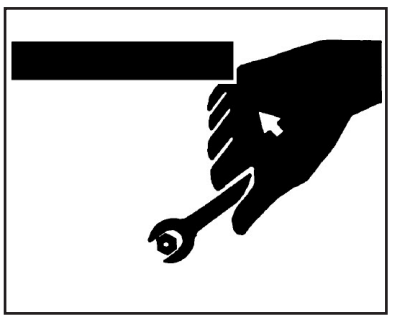

Figure 3.6

HIGH PRESSURE FLUID HAZARDS

Figure 3.7 - Escaping fluid under pressure can penetrate the skin causing serious injury.

Always stop machine, allow to cool and relieve pressure before servicing hydraulic system. Never open hydraulic lines under pressure. Make sure all connections are tight and all hoses are in good condition before pressurizing system.

Always use a piece of cardboard or wood to search for leaks instead of hand. Wear impervious gloves and eye protection when servicing system.

Seek medical attention immediately if fluid penetrates your skin. Gangrene may result if wound is left untreated.

Figure 3.7

AVOID HEATING NEAR HIGH PRESSURE FLUID LINES

Figure 3.8 - Flammable spray can be generated by heating near pressurized fluid lines, resulting in burns to yourself and bystanders.

Do not heat by welding, soldering or using a torch near pressurized fluid lines or other flammable materials.

Pressure lines can suddenly burst when heat goes beyond the immediate flame area.

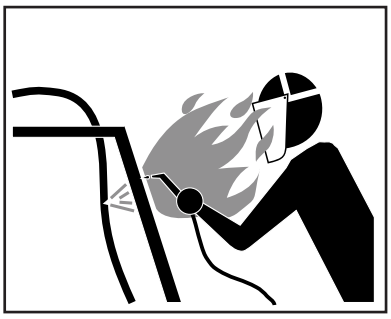

Figure 3.8

AVOID TOXIC FUMES & DUST

Figure 3.9 - Hazardous fumes can be generated when paint is heated from welding, soldering or using a torch.

Remove paint before heating:

- Remove a minimum of 4 in (100mm) from area to be affected by heating. If paint cannot be removed, wear an approved respirator while heating or welding.
- Avoid breathing dust from sanding or grinding on paint.
- If a solvent or paint stripper is used, wash stripper away with soap and water before heating or welding. Remove solvent or paint stripper containers and other flammable material from area. Allow fumes to disperse for at least 15 minutes before heating or welding.

Do not use chlorinated solvents in areas where welding will take place.

Perform all work in a well-ventilated area that willl carry all toxic fumes and dust away.

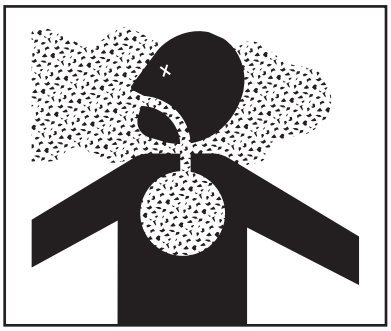

Figure 3.9

CLEAN MACHINE OF HAZARDOUS CHEMICALS

CAUTION	During application of hazardous chemicals, residue can build up on the inside or outside of the vehicle. Clean vehicle according to use instructions of hazardous chemical.

Figure 3.10 - When exposed to hazardous chemicals, clean exterior and interior of vehicle daily to keep free of the accumulation of visible dirt and contamination.

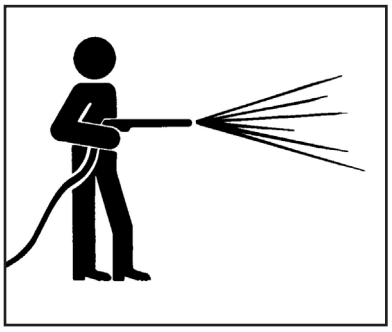

Figure 3.10

1. Clean operator's station to maintain unobstructed visibility of all windows and mirrors, and safe operation of all controls.

NOTICE!	Directing pressurized water at electronic/ electrical components, bearings and hydraulic seals or other sensitive parts and components may cause product malfunctions. Reduce pressure and spray at 45 to 90 degree angles.

2. Wash entire exterior of vehicle.
3. Dispose of any wash water with hazardous concentrations of active or non-active ingredients according to published regulations or directives.

HANDLE BATTERIES SAFELY

WARNING	Sulfiric acid in battery electrolyte is poisonous. It can burn skin, eat holes in clothing, and cause blindness if it contacts eyes.

Figure 3.11 - Lead acid batteries generate flammable and explosive gases. Keep sparks and flame away from batteries. Do not smoke.

If acid contacts eyes, skin or clothing, flush with water immediately. Seek immediate medical attention if acid contacts eyes.

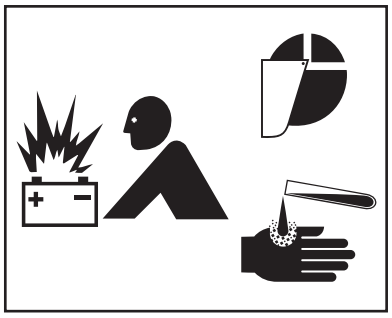

Figure 3.11

PROPER TIRE MAINTENANCE

Figure 3.12 - Never weld on a wheel or rim that has a tire on it.

Never attempt to mount or remove a tire unless using the proper equipment, tire safety cage, instructions, training, and you are qualified to perform the work safely. Failure to follow the correct procedures when mounting a tire on a wheel or rim can cause an explosion and serious injury.

Tire service procedures must be performed by trained and qualified personnel.

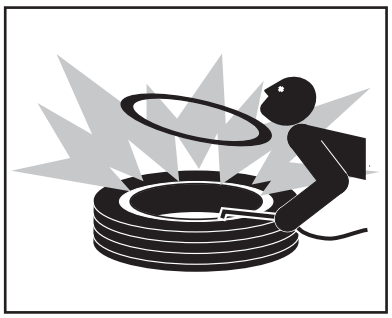

Figure 3.12

PARK VEHICLE SAFELY

Figure 4.1 - When leaving the vehicle unattended for any reason, be sure to:

- Shut down PTO.
- Shut off vehicle's engine, and unit's engine if applicable.
- Place vehicle transmission in "Neutral" or "Park".
- Set parking brake firmly.
- Remove ignition key and take it with you.
- Block wheels.

These actions are recommended to avoid unauthorized use, runaway, vandalism, theft and unexpected operation during startup.

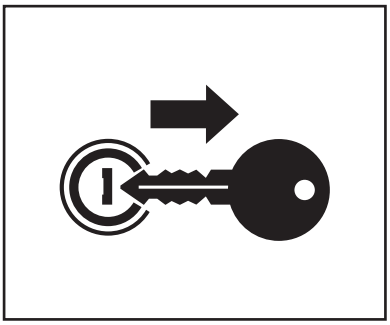

Figure 4.1

SUPPORT MACHINE PROPERLY

Figure 4.2 - When machine is removed from vehicle, always store on adequate supports on a firm level surface. Improper supporting or storage of spreader may cause machine to fall, resulting in serious injury or death.

Never use lifting device to free machine from a chassis, storage stands or frozen ground, or to lift the chassis in any way. Shock loading is prohibited and sudden accelerations must be avoided. Lifting in such a manner could result in injury or machine damage.

Figure 4.2

DISPOSE OF WASTE PROPERLY

Figure 4.3 - Improper disposal of waste can threaten the environment and ecology. Potentially harmful waste used with equipment include items such as fuel, oil, filters and batteries.

Use leakproof containers when draining fluids. Do not use food or beverage containers that may mislead someone into drinking from them. Do not pour waste onto the ground, down a drain, or into any water source.

Inquire on proper disposal methods from your local environmental or recycling center, or from your local dealer.

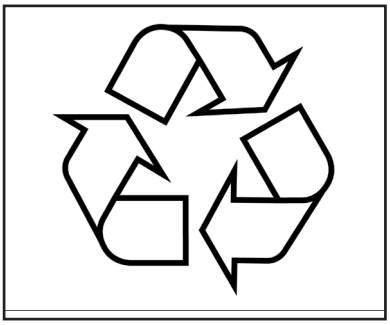

Figure 4.3

Safety Decal Maintenance

Keep safety decals and signs clean and legible at all times.

Replace safety decals and signs that are missing or have become illegible.

Replaced parts that displayed a safety sign should also display the current sign.

Safety decals or signs are available from your dealer's Parts Department or from New Leader Manufacturing by calling (800) 363-1771.

Safety Decal Installation

Clean Surface

Wash the installation surface with a synthetic, free-rinsing detergent. Avoid washing the surface with a soap containing creams or lotion. Allow to dry.

Position Safety Decal

Decide on the exact position before application. Application marks may be made on the top or side edge of the substrate with a lead pencil, marking pen, or small pieces of masking tape. NOTE: Do not use chalk line, china marker, or grease pencil. Safety decals will not adhere to these.

Remove the Liner

A small bend at the corner or edge will cause the liner to separate from the decal. Pull the liner away in a continuous motion at a 180-degree angle. If the liner is scored, bend at score and remove.

Apply Safety Decal

Tack decal in place with thumb pressure in upper corners. Using firm initial squeegee pressure, begin at the center of the decal and work outward in all directions with overlapping strokes. NOTE: Keep squeegee blade even—nicked edges will leave application bubbles. Pull up tack points before squeegeeing over them to avoid wrinkles.

Remove Pre-mask

If safety decal has a pre-mask cover remove it at this time by pulling it away from the decal at a 180 degree angle. NOTE: It is important that the pre-mask covering is removed before the decal is exposed to sunlight to avoid the pre-mask from permanently adhering to the decal.

Remove Air Pockets

Inspect the decal in the flat areas for bubbles. To eliminate the bubbles, puncture the decal at one end of the bubble with a pin (never a razor blade) and press out entrapped air with thumb moving toward the puncture.

Re-Squeegee All Edges

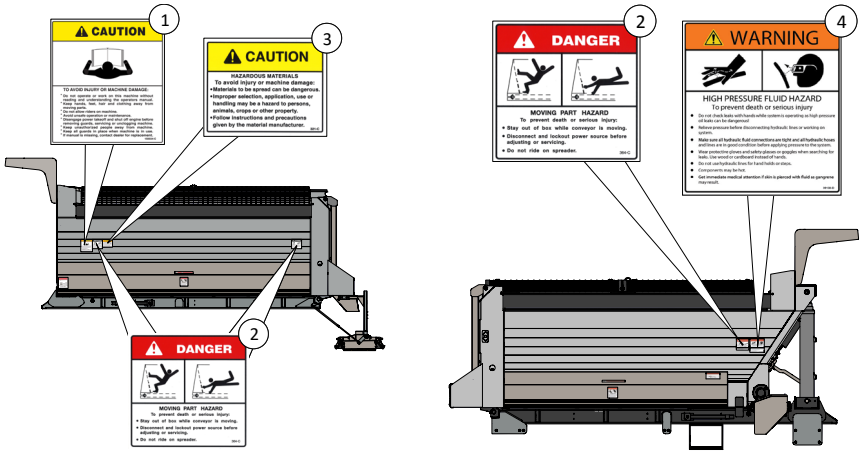
1
CAUTION
TO AVOID INJURY OR MACHINE DAMAGE:
3
CAUTION
HAZARDOUS MATERIALS
To avoid injury or machine damage:
2
DANGER
MOVING PART HAZARD
To prevent death or serious injury:
2
DANGER
MOVING PART HAZARD
To prevent death or serious injury:
4
WARNING
HIGH PRESSURE FLUID HAZARD
To prevent death or serious injury

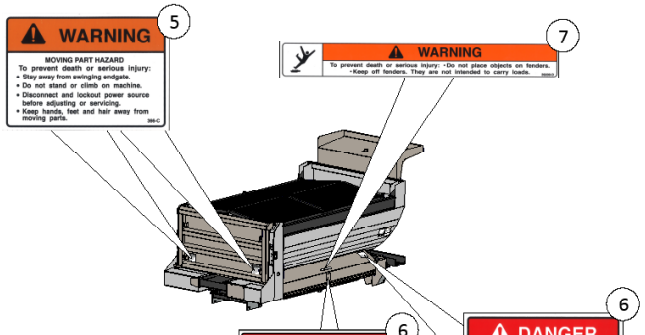
5
WARNING
MOVING PART HAZARD
To prevent death or serious injury:
7
WARNING
To prevent death or serious injury: • Do not place objects on fenders.
• Keep off fenders. They are not intended to carry loads.
6
DANGER
CRUSHING HAZARD
To prevent death or serious injury:
6
DANGER
CRUSHING HAZARD
To prevent death or serious injury:

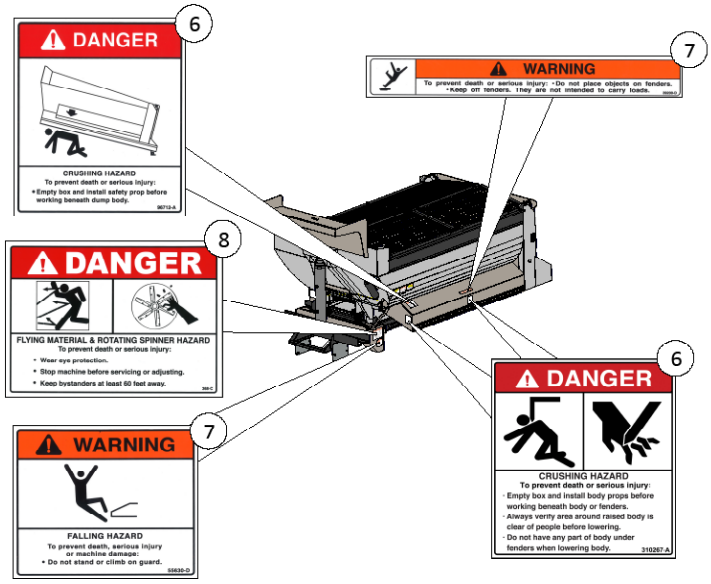
6
DANGER
CRUSHING HAZARD
To prevent death or serious injury:
7
WARNING
To prevent death or serious injury: • Do not place objects on fenders.
• Keep off fenders. They are not intended to carry loads.
8
DANGER
FLYING MATERIAL & ROTATING SPINNER HAZARD
To prevent death or serious injury:
7
WARNING
FALLING HAZARD
To prevent death, serious injury or machine damage:
6
DANGER
CRUSHING HAZARD
To prevent death or serious injury:

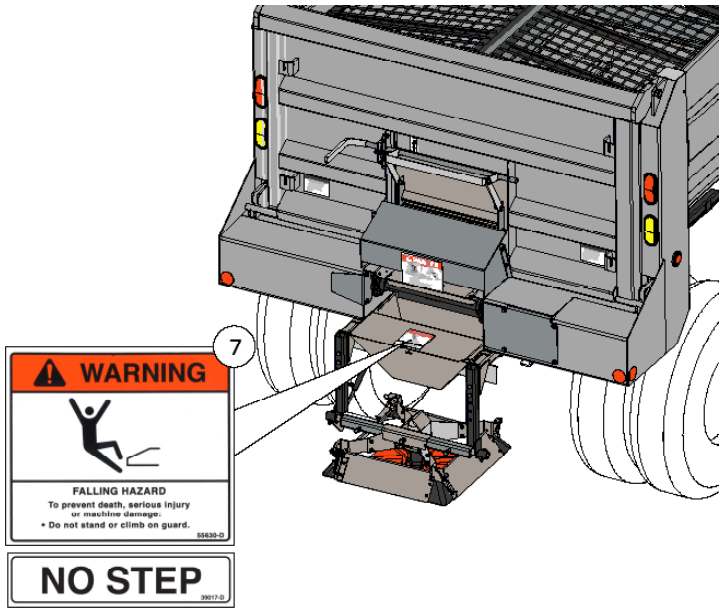
7
WARNING
FALLING HAZARD
To prevent death, serious injury or machine damage:
• Do not stand or climb on guard.
NO STEP

1. CAUTION: TO AVOID INJURY OR MACHINE DAMAGE:

- Do not operate or work on this machine without reading and understanding the operator's manual.
- Keep hands, feet, hair and clothing away from moving parts.
- Do not allow riders on machine.
- Avoid unsafe operation or maintenance.
- Disengage power takeoff and shut off engine before removing guards, servicing or unclogging machine.
- Keep unauthorized people away from machine.
- Keep all guards in place when machine is in use.
- If operator's manual is missing, contact your local New Leader dealer or print a new copy from **www.newleadermanufacturing.com**.

2. DANGER: MOVING PART HAZARD

To prevent death or serious injury:

- Stay out of box while conveyor (or auger) is moving.
- Disconnect and lock out power source before adjusting or servicing.
- Do not ride on the spreader.

3. CAUTION: HAZARDOUS MATERIALS

To avoid injury or machine damage:

- Materials to be spread can be dangerous.
- Improper selection, application, use or handling may be hazardous to persons, animals, crops or other property.
- Follow instructions and precautions given by material manufacturer.

4. WARNING: HIGH-PRESSURE FLUIDS

To prevent death or serious injury:

- Do not check for leaks with hands while system is operating as high pressure oil leaks can be dangerous!
- Relieve system pressure before disconnecting hydraulic lines or working on system.
- Make sure all hydraulic fluid connections are tight and all hydraulic hoses and lines are in good condition before applying pressure to the system.
- Wear protective gloves and safety glasses or goggles when searching for leaks. Use wood or cardboard instead of hands.
- Do not use hydraulic lines for hand holds or steps.
- Components may be hot.
- Get immediate medical attention if skin is pierced with fluid as gangrene may result.

5. WARNING: MOVING PART HAZARD

To prevent death or serious injury:

- Stay away from swinging endgate.
- Close and secure guards before operating machine.
- Do not stand or climb on machine.
- Disconnect and lockout power source before adjusting or servicing.
- Keep hands, feet and hair away from moving parts.

6. DANGER: CRUSHING HAZARD

To prevent death or serious injury:

- Empty box and install body props before working beneath body or fenders.
- Always verify area around raised body is clear of people before lowering.
- Do not have any part of body under fenders when lowering body.

7. WARNING: FALLING HAZARD

To prevent death, serious injury or machine damage:

- Do not climb or stand on machine.
- Do not place objects on fenders.
- Keep off fenders. They are not intended to carry loads.

8. DANGER: FLYING MATERIAL AND ROTATING SPINNER HAZARD

To prevent death or serious injury:

- Wear eye protection.
- Stop machine before servicing or adjusting.
- Keep bystanders at least 60 feet away.

Safety Decals
In-Cab & Truck Frame

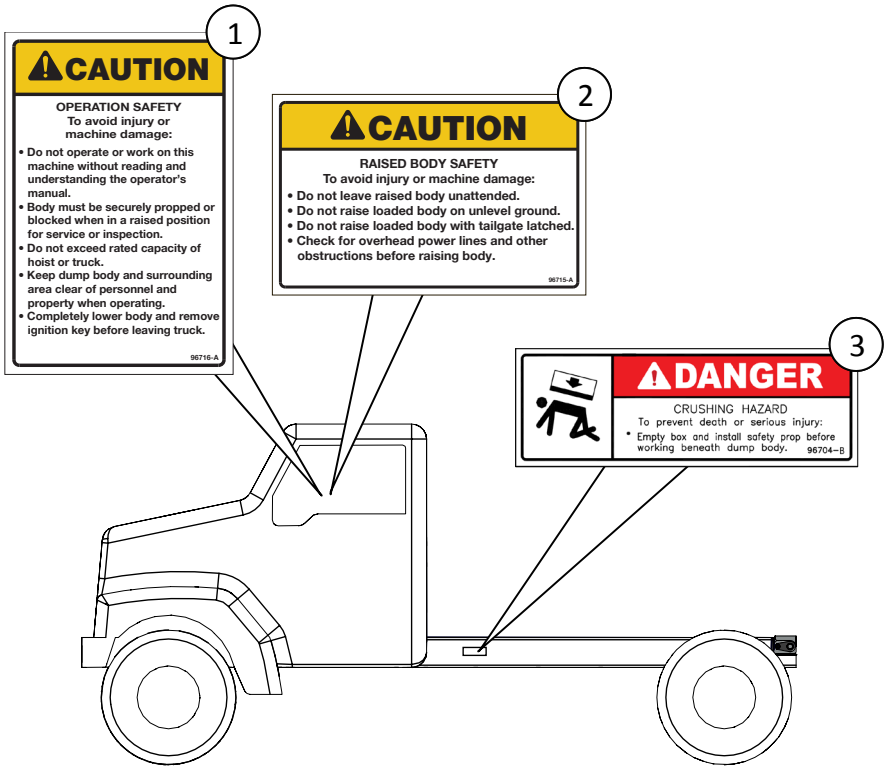

NOTE: Apply decals 1 and 2 in a conspicuous location in the cab of the truck. Apply Decal 3 in a conspicuous location the truck frame, behind the cab.

1. CAUTION: OPERATION SAFETY

To avoid injury or machine damage:

- Do not operate or work on this machine without reading and understanding the operator's manual.
- Body must be securely propped or blocked when in a raised position for service or inspection.
- Do not exceed rated capacity of hoist or truck.
- Keep dump body and surrounding area clear of personnel and property when operating.
- Completely lower body and remove ignition key before leaving truck.

2. CAUTION: RAISED BODY SAFETY

To avoid injury or machine damage:

- Do not leave raised body unattended.
- Do not raise body on unlevel ground.
- Do not raise body with tailgate latched.
- Check for overhead power lines and other obstructions before raising body.

3. DANGER: CRUSHING HAZARD

To prevent death or serious injury:

- Empty box and install safety prop before working beneath dump body.

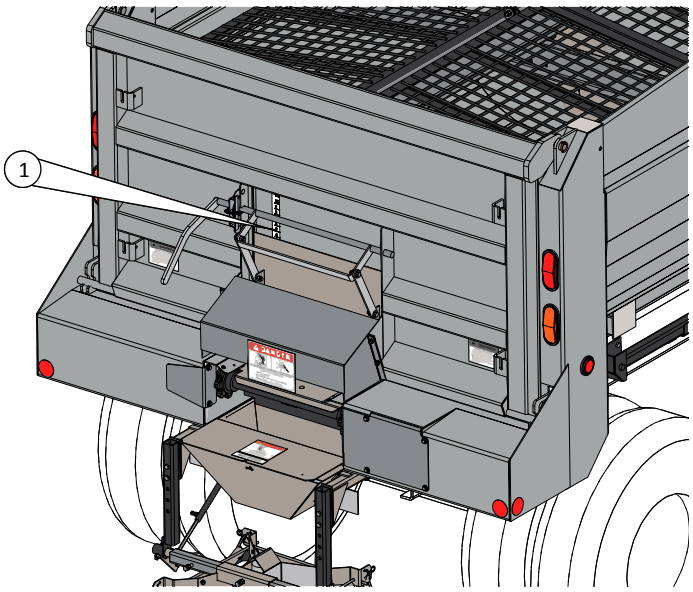

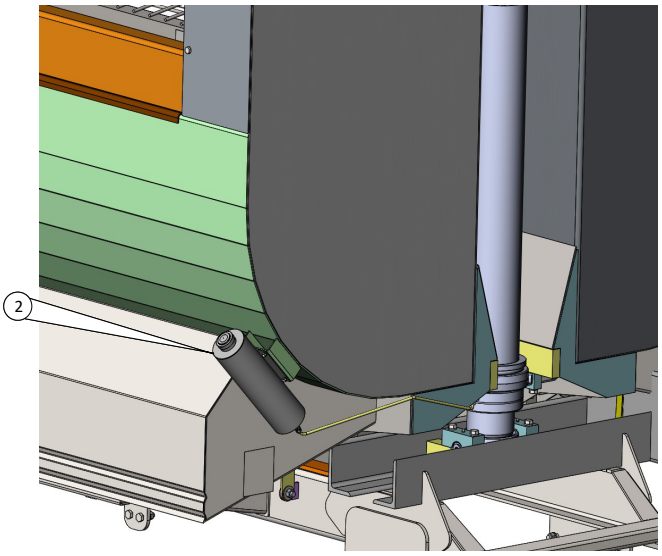

1. FEEDGATE OPENING INDICATOR

To avoid machine damage and premature wear:

- Set feedgate for correct rate of material to be spread. Refer to "Operations" section of this manual for details.

2. NOTICE: CONVEYOR CHAIN LUBRICATION

To avoid machine damage and premature wear:

- Conveyor chain life will be noticeably extended by periodic lubrication.
- See "Lubricant & Hydraulic Oil Specifications" in this manual for details.
- Failure to keep the chain links loose and free running can result in severe damage to the conveyor chain, drag shaft, gearcase and body structure, and is cause for voiding the warranty.

The XT3 is designed to haul, dump and spread. The flat dump body floor allows hauling of pallets and barrels. The front telescopic hoist provides a low center of gravity and eliminates the need for a sub-frame.

Heavy-duty 409 or 304 stainless steel inner and outer sills are fully welded to the XT3 floor to resist corrosion and improve strength. One-piece construction of the floor and sides with a radius design reduces material build-up.

The XT3 is comes with a 24-inch (610mm) conveyor bottom. Conveyor options include a #2 bar chain conveyor, consisting of parallel strands of pintle chain joined by cross bars every other link, a #3 bar chain conveyor with cross bars at every link, or a #4 belt-over-chain conveyor, consisting of moderately oil-resistant (MOR) belting fastened to joining cross bars at every other link.

The quick-detach spinners move up/down, right/left and fore/aft for precise spread pattern control.

This product is intended for commercial use only.

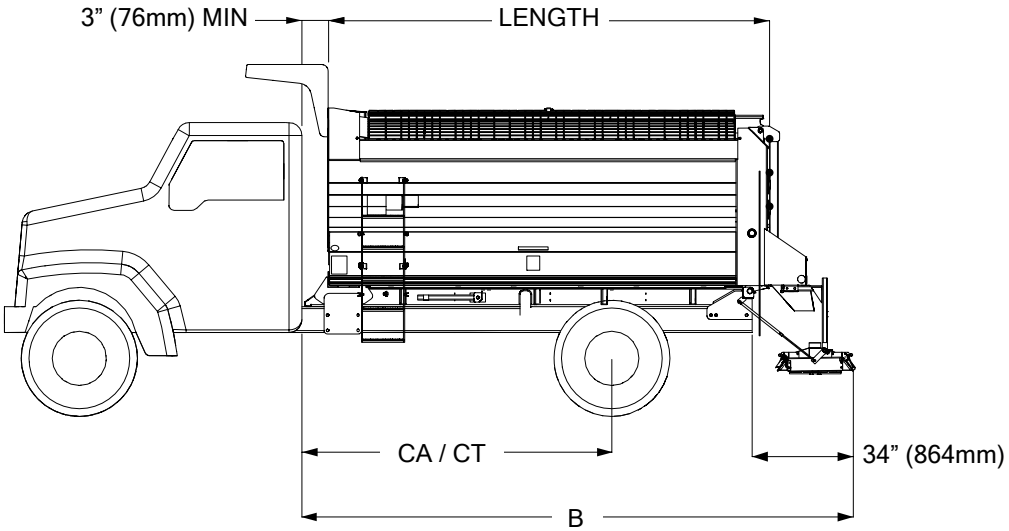

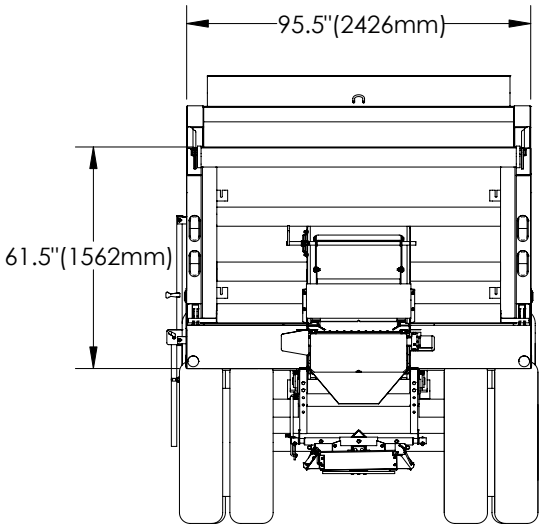

BODY LENGTH feet	REQUIRED FRAME LENGTH inches (mm)	CA/CT* inches (mm)	LENGTH inches (mm)
10	123.5 (3137)	84 (2134)	108 (2743)
11	135.5 (3442)	96 (2438)	119 (3023)
12	147.5 (3747)	108 (2743)	129 (3277)
13	159.5 (4051)	108 (2743)	140 (3556)
14	173.0 (4394)	120 (3048)	190 (4826)
15	185.0 (4699)	132 (3353)	203 (5156)
16	195.5 (4966)	144 (3658)	

NOTICE! The Cab to Axle/Tandem dimensions are only guidelines. Consult federal, state and local weight laws and chassis manufacturer’s ratings to ensure neither government weight restrictions, nor GVWR and GAWRs are exceeded.

BODY LENGTH feet	WEIGHT (APPROX.) Pounds (kg)	STRUCK CAPACITY cu ft (cu m)	STRUCK CAPACITY W/SIDEBOARDS cu ft (cu m)
10	4323 (1961)	205 (5.8)	302 (8.6)
11	4513 (2047)	227 (6.4)	335 (9.5)
12	4703 (2133)	248 (7.0)	367 (10.4)
13	4893 (2219)	270 (7.6)	400 (11.3)
14	5083 (2306)	292 (8.3)	429 (12.2)
15	5273 (2392)	316 (8.9)	464 (13.2)
16	5463 (2478)	338 (9.6)	381 (14.1)

PART	WEIGHT (APPROX.) Pounds (Kilograms)
TAILGATE	425 – 500 (192.8-226.8)
CRADLE	300 (136.1)
HOIST CYLINDER	275 – 550 (124.7-249.5)
CROSS CONVEYOR	200 (90.7)
FRONT SPINNER	75 (34)
REAR SPINNER	125 (56.7)
CAB SHIELD	150 – 275 (68-124.7)
SIDEBOARDS	75 – 125 (34-56.7)
RESERVOIR	275 (124.7)

Before taking the unit out to use, make a walk-around inspection to assure that the dump body is not damaged, that all essential parts are in place, and that all fasteners are tight and all guards are in place. Check all controls to be sure they are operating satisfactorily.

Before testing the unit, make sure the controls should be off. Do not load dump body.

1. Make sure that no loose parts or other material are in the body or on the spinner.
2. Raise feedgate until it is completely clear of conveyor.
3. Fill the hydraulic reservoir with oil. Refer to the Lubricant and Hydraulic Oil Specifications section for proper oil.
4. Start engine and engage PTO. Let engine run for a few minutes, allowing oil to circulate through the pump and back to the reservoir. In cold weather, allow more warm-up time.
5. Make sure pins are installed and jam nuts are tightened. Open spinner control and run unit until the spinner is running smoothly and air has been purged from the circuit. Close spinner control.

WARNING Stand clear of moving machinery. Entanglement of clothes, any part of your body or anything in your hands can cause serious injury or even death.

6. Open conveyor control and let unit run until conveyor is running smoothly. Close conveyor control. Open tailgate latch air control and make sure tailgate latch releases.
7. Make sure spinner hopper will not contact any truck frame component before lifting dump body. Open hoist control and slowly lift and lower dump body to check lift angle and range of motion. Make sure tailgate opens and closes correctly.
8. Check all connections in the hydraulic system to make sure there are no leaks.
9. Check hydraulic reservoir and refill.

WARNING DO NOT check leaks with hands while system is operating as high pressure oil leaks can be dangerous! If skin is pierced with hydraulic fluid at high pressure seek immediate medical attention as fluid injected into the skin could cause gangrene if left untreated. Relieve pressure before disconnecting hydraulic lines or working system. Make sure all hydraulic fluid connections are tight and all hydraulic hoses and lines are in good condition before applying pressure to the system. Wear protective gloves and safety glasses or goggles when working with hydraulic systems.

WARNING DO NOT check for leaks adjacent to moving parts while system is operating as there may be danger of entanglement!

CAUTION Open tailgate before hoisting dump body with material in it. TRUCK COULD TIP, causing serious injury or death, if body is raised with material in it and the tailgate closed

CAUTION Always disengage tailgate air with body completely down and make sure latches are closed before filling dump body.

WARNING Tailgate latch springs must be in place during operation. Springs keep the latch closed if air pressure drops. If springs are not in place, tailgate could open inadvertently and drop load.

Adjustments

CAUTION Tag, lock or disconnect latch from air supply to prevent operation. Keep hands clear during adjustment, especially area between yoke joint and cap screw (Figure 1, Item 5).

Tailgate Latch

ITEM	DESCRIPTION
1	Spring
2	Clevis Pin
3	Hairpin
4	Yoke
5	Cap Screw
6	Nut
7	Eyebolt Nut
8	2nd Eyebolt Nut
9	Pivot Arm

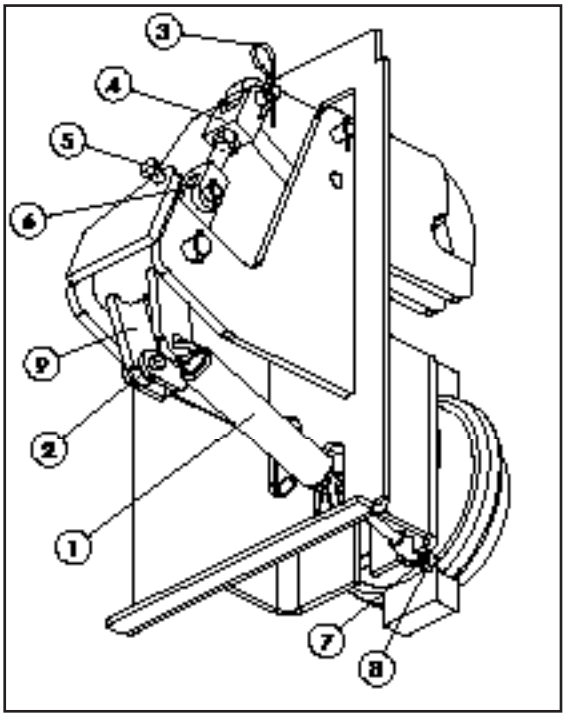

Figure 1 - Latch Adjustment

Test tailgate latch mechanism by opening latch with about 85 PSI. Release air pressure and latch should close and toggle over-center with spring tension. Adjust according to the following (using Figure 1):

1. Close tailgate, lower body and disconnect air brakes from air supply before making any adjustments.
2. Detach spring (1) and remove clevis pin (2) from air brake yoke.
3. Push yoke joint off of over-center to open latch.
4. Remove hairpin (3) and disconnect yoke (4).
5. Turn upper yoke half a turn to adjust latch force.
6. Connect yoke (4) and secure with hairpin (3).
7. Push mechanism over-center. Latch should be tight enough to close tailgate with a good seal, but not so tight that it can't be manually pushed over-center. Adjust as necessary.
8. Make sure mechanism is over-center and tighten cap screw (5) until latch opens.
9. Loosen screw (5) one-and-a-half turns and secure with nut (6).
10. Attach spring (1) and tighten eyebolt nut (7) until finger tight. Tighten two more turns and secure with additional nut (8).
11. Adjust air brake yoke and attach to pivot arm (9).
12. Connect latch to air supply. Test latch with air pressure to make sure it operates properly.

Tailgate

NOTICE!	Laying the tailgate flat is not recommended. New Leader Manufacturing is not responsible for damage caused by such use.

Tailgate latches must be locked closed with clevis pins (not supplied) to prevent tailgate from dropping. Attach chains from tailgate lift hooks to dump body lift hooks. With tailgate supported by a suitable lifting device, remove lynch pins and hinge pins at top of tailgate to lay tailgate flat. Use suitable lifting device to carefully lower tailgate. Do not let tailgate hang below horizontal.

Rear Spinner

Change spread pattern by adjusting spinner location. Loosen Hanger/Spinner hardware to move spinner right/left as necessary. Remove Frame hardware to move spinner up/down as necessary. Loosen Frame/Tube Mount hardware and slide spinner forward/rearward as necessary. Make only one adjustment between spread pattern tests.

Feedgate

Adjust opening by removing pin near feedgate handle. Turn handle to adjust opening as necessary and replace pin.

Make sure unit has been properly serviced and is in good operating condition.

CAUTION	Disengage tailgate air with dump body completely down and make sure latches are closed before filling body with material.

DANGER	Open tailgate before hoisting dump body with material in it. TRUCK COULD TIP if body is raised with the tailgate closed, causing serious injury or death if dump body is hoisted with a closed tailgate.

DANGER	Check for overhead power lines and other obstructions before raising body. Lower dump body before leaving job site.

CAUTION	Make sure tailgate latch is open before lowering dump body. Close latch when tailgate is closed. If tailgate does not latch shut, tailgate will swing loose and material may be lost or injury could occur.

NOTICE!	Do not operate conveyor when raising dump body. Do not operate conveyor with conveyor cover installed.

Dumping

1. Fold down rear spinner cover.
2. Open tailgate latch.
3. Engage pump drive PTO.
4. Raise dump body as necessary.

Metering With Coal Chute Feedgate

DANGER Raise dump body slowly—only enough for metering with coal chute feedgate. If material is raised in the dump body, the center of gravity will rise and move rearward, causing instability. TRUCK COULD TIP backwards, causing serious injury or death.

1. Fold down rear spinner cover.
2. Open coal chute feedgate.
3. Engage pump drive PTO.
4. Slowly raise dump body.

Tailgate Air Kit

Pull knob up to open tailgate; press knob down to close tailgate. Place knob in center position for no pressure (neutral position).

Spreading

CAUTION Drive only at speeds which permit safe control of vehicle.

1. Adjust conveyor or augers to setting required for material used.
2. Adjust spinner to setting required for material used to give spread width and pattern desired.
3. Set feedgate opening to obtain the yield desired.
4. Make sure hydraulic reservoir shut-off valve is fully opened.
5. Engage pump drive PTO.
6. Drive at speeds that will allow engine to turn at proper RPM.

Preventative Maintenance Pays!

The handling and spreading of salt and sand is a highly severe operation with respect to metal corrosion. Establish a frequent, periodic preventative maintenance program to prevent rapid deterioration to equipment. Proper cleaning, lubrication and maintenance will yield longer life, more satisfactory service and more economical use of your equipment.

WARNING Shut off all power and allow all moving parts to come to rest before performing any maintenance operation.

Hydraulic System

Proper oil in the hydraulic system is one of the most important factors for satisfactory operation. Utmost cleanliness in handling the oil cannot be stressed enough. Keep hydraulic oil in original closed containers, clean top of container before opening and pouring, and handle in extremely clean measures and funnels.

Check hydraulic oil level and filter condition regularly.

Refer to "Lubricant and Hydraulic Oil Specifications" for selection of the proper hydraulic fluid for use in the hydraulic system.

WARNING DO NOT check leaks with hands while system is operating as high pressure oil leaks can be dangerous! If skin is pierced with hydraulic fluid at high pressure seek immediate medical attention as fluid injected into the skin could cause gangrene if left untreated. Relieve pressure before disconnecting hydraulic lines or working system. Make sure all hydraulic fluid connections are tight and all hydraulic hoses and lines are in good condition before applying pressure to the system. Wear protective gloves and safety glasses or goggles when working with hydraulic systems.

WARNING DO NOT check for leaks adjacent to moving parts while system is operating as there may be danger of entanglement!

Periodically inspect hydraulic hoses and fittings for leaks. Repair and replace components as necessary.

Hydraulic Hose

Hose assemblies in operation should be inspected frequently for leakage, kinking, abrasion, corrosion or other signs of wear or damage. Worn or damaged hose assemblies should be replaced immediately.

WARNING Testing should be conducted in approved test stands with adequate guards to protect the operator.

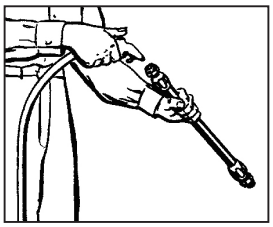

Clean
Clean assembly by blowing out with clean compressed air. Assemblies may be rinsed out with mineral spirits if the tube stock is compatible with oil, otherwise hot water at 150°F (65.55° C) maximum may be used.

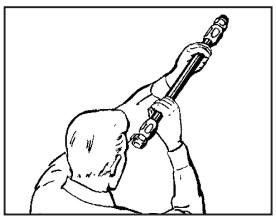

Inspect
Examine hose assembly internally for cut or bulged tube, obstructions, and cleanliness. For segment style fittings, be sure that the hose butts up against the nipple shoulder; band and retaining ring are properly set and tight, and segments are properly spaced. Check for proper gap between nut and socket or hex and socket. Nuts should swivel freely. Check the layline of the hose to be sure the assembly is not twisted. Cap the ends of the hose with plastic covers to keep clean.

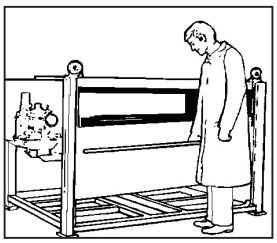

Test
The hose assembly should be hydrostatically tested at twice the recommended working pressure of the hose.
Test pressure should be held for not more than one minute and not less than 30 seconds. When test pressure is reached, visually inspect hose assembly for: 1. Any leaks or signs of weakness. 2. Any movement of the hose fitting in relation to the hose. Any of these defects are cause for rejection.

Storage and Handling

Hose should be stored in a dark, dry atmosphere away from electrical equipment, and the temperature should not exceed 90° F (32° C).

Conveyor Chain

WARNING Stay out of the hopper body. If it's necessary to enter the hopper, return to the shop, empty body, turn off all power, set vehicle brakes, lock engine starting switch and remove keys before entering. Tag all controls to prohibit operation. Tags should be placed, and later removed, only by person working in the body.

Hose down unit and remove any material build-up on sprockets and under chain.

NOTICE! The conveyor will move away from the bottom panel if material accumulates under the conveyor or on the sprockets. The more material that accumulates, the closer the chain will come to the chain shields. If the conveyor should catch a chain shield, it could permanently damage the conveyor, the chain shields or the unit. Do not remove material while conveyor or spinner is running!

Lubrication

DANGER	When conveyor is running, stay out of body. Stay clear of all moving parts. Entanglement of clothes, any part of your body or anything in your hands can cause serious injury. Do not use a bar, rod or hammer on conveyor while it is moving—if it gets caught it could cause injury. With spinner shut down and conveyor running slowly, spray oil mixture between links of chain by spraying through openings at the rear end of sill or from front outside body when access clearance is adequate. Do this at least once a week and after each time the unit is washed. Allow to dry before lubricating.

Lubricate the conveyor chain at least once a week. Fill the oiler reservoir daily with a mixture of 75% diesel fuel and 25% SAE 10 oil. Before each filling of the dump body with material to be spread, open petcock and run the conveyor until the full length of chain has been oiled, then shut petcock.

If unit is not equipped with a chain oiler, Use a mixture of 75% diesel fuel and 25% SAE 10 oil in a pressurized hand spray gun.

Tension

NOTICE! Do not over-tighten conveyor chains. Proper chain tension is a factor in chain and sprocket life.

NOTICE! Tensioning conveyor with gear case mounting screws tight will cause pressure on gear case output shaft. Failure to loosen screws could result in damage to gear case, bearings or other parts.

Conveyor chains that are too tight will tend to stretch. This will cause excess sprocket wear and eventually cause breakage. Excess slack presents the possibility of the chain catching on sub-frame parts. Bent or distorted chain bars will cause damage to the body as well. Straighten or replace bent or distorted chain bars immediately.

Main Conveyor

Loosen cap screws located under gear case mounting weldment to avoid pressure on gear case shaft as shown in Figure 2 prior to adjusting chain tension for main conveyor.

The adjustment bolts are under the fenders at the rear of the unit. The proper chain tension for the main conveyor is 36" to 40" from the rear of the sill, as illustrated in Figure 3. Be sure the chain is tensioned equally on both sides.

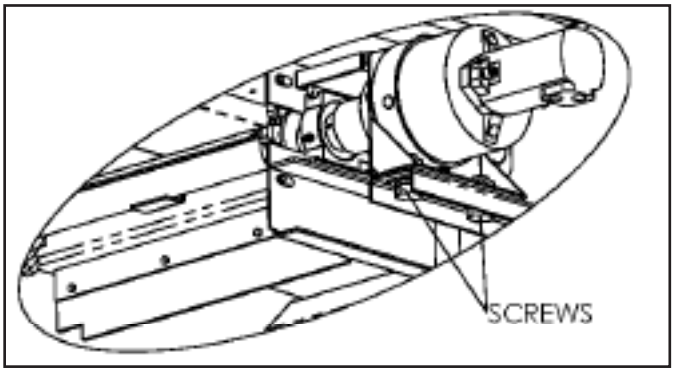

Figure 2 - Gear Case Mounting Bolts

Chain Tension to be Measured
from
Rear of Sill.

Proper Tension:

36" - 40"
(914mm - 1016mm)

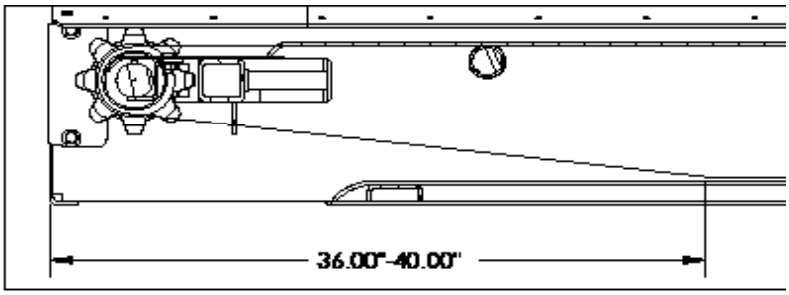

Figure 3 - Main Conveyor Chain Tension

Tailgate & Tailgate Latch

Pump multi-purpose grease into zerks. Oil all pivots and yoke threads monthly with heavy oil.

Bearings

Grease in a bearing acts to prevent excessive wear of parts, protects ball races and balls from corrosion and aids in preventing excessive heat within the bearing. It is very important the grease maintains its proper consistency during operation. It must not be fluid and it must not channel.

Make sure that all fittings are thoroughly cleaned before grease is injected. Points to be lubricated by means of a grease gun have standard grease fittings.

Bearings should be lubricated by pumping grease in slowly until a slight bead forms around the seals. This bead indicates adequate lubrication and also provides additional protection against the entrance of dirt.

Bushings

Do not grease hinge or hoist cylinder self-lubricating bushings. Check bushings monthly to make sure they are secure and not worn. Make sure hoist cylinder bolts are tightened to recommended torque.

Hoist Cylinder

Cylinder should be lubricated by pumping grease into the zerk slowly until slight bead forms around the seals. This bead indicates adequate lubrication and also provides additional protection against the entrance of dirt.

Be sure that all fittings are thoroughly cleaned before grease is injected. Points to be lubricated by means of a grease gun have standard grease fittings.

Fasteners

Tighten all screw fasteners to recommended torques after first week of operation and annually thereafter. If loose fasteners are found at anytime, tighten to recommended torques. Replace any lost or damaged fasteners or other parts immediately upon finding such damage or loss.

Clean-Up

Maintain a minimum maintenance operation by washing this equipment thoroughly every two or three days during the operating season. Hose the unit down under pressure to free all sticky and frozen material.

It is important that the machine be thoroughly cleaned at the end of each operating season. All lubrication and maintenance instructions listed in this section should be closely followed. For longer body life, repaint worn spots to prevent the formation of rust.

NOTICE!	The lubricant distributor and/or supplier is to be held responsible for the results obtained from their products. Procure lubricants from distributors and/or suppliers with unquestionable integrity, supplying known and tested products. Do not jeopardize your equipment with inferior lubricants. No specific brands of oil are recommended. Use only products qualified under the following oil viscosity specifications and classifications and recommended by reputable oil companies.

Hydraulic System

The following are the recommended procedures for selecting the proper hydraulic fluid for use in the hydraulic system. Select a major brand industrial PREMIUM QUALITY (anti-wear type) hydraulic oil to provide viscosity between 100-200 SSU at operating temperature. Premium hydraulic oils with viscosity indexes of 95 or above will provide the following temperature ranges :

INDUSTRY IDENTIFICATION/ SAE VISCOSITY GRADE	OPERATING TEMPERATURE	VISCOSITY
150 SSU	122° F (50° C)/84° F (28.9° C)	100 SSU/200 SSU
225 SSU	140° F (60° C)/107° F (41.7° C)	100 SSU/200 SSU
300 SSU	150° F (66.6° C)/116° F (46.1° C)	100 SSU/200 SSU
450 SSU	165° F (73.9° C)/130° F (54.5° C)	100 SSU/200 SSU
600 SSU	182° F (83.3° C)/145° F (62.8° C)	100 SSU/200 SSU

If, because of necessity or convenience, it is desirable to use an automotive engine oil, multi-viscosity oils of SC rating (formerly MS quality) which will provide between 100-200 SSU at operating temperature can be used. These will provide proper viscosity over a wide range. For example:

SAE VISCOSITY GRADE	OPERATING TEMPERATURE	VISCOSITY
10W-30	130° F (54.5° C)	100 SSU
	100° F (37.8° C)	200 SSU
10W-40	190° F (87.8° C)	100 SSU
	140° F (60° C)	200 SSU

Gearcase Lubricant

Fill each gearcase with non-corrosive type extreme pressure (E.P.) gear oil conforming to MIL-L2105 B multi-purpose gear lubricating oil requirements (API Service GL 4) based on ambient temperatures listed below. Refill capacities as follows:

- Conveyor gearcase: 24 oz (0.5 L) each
- Auger gearcase: 10 oz (0.3 L) each

Grease Gun Lubricant

Use a waterproof ball and roller bearing lithium base lubricant with a minimum melting point of 300°F (150° C). This lubricant should have a viscosity which assures easy handling in the pressure gun at prevailing atmospheric temperatures. The grease should conform to NLGI No. 2 consistency.

WARNING Shut off all power and allow all moving parts to come to rest before performing any maintenance operation.

The spreader should be regularly lubricated with the lubricants recommended in this manual in accordance with the following chart:

LOCATION		PLACES	METHOD	FREQUENCY
Pump Drive				
Transmission PTO	Slip Joint	1	Grease Gun	Weekly
	U-Joint	2	Grease Gun	Monthly
Crankshaft PTO	Sliding Spline	1	Grease Gun	Weekly
	U-Joint	2	Grease Gun	Monthly
Hydraulics				
Reservoir		1	Oil	Check Daily; Change Annually
Filter		1	Check Daily; Change Element when Indicated (Red)	
Tailgate				
Hinge Pins		2	Oil	Monthly
Latch Pivots		2	Grease Gun	Monthly
Latch Yoke Threads		2	Oil	Monthly
Hoist Cylinder				
Cylinder		2	Grease Gun	Weekly
Hinge Point Fittings		2	Grease Gun	Daily
Hoist Mount Fittings		2	Grease Gun	Every 50 Hours of Operation
Conveyor				
Rear Bearings - Lube Bank		2	Grease Gun	Weekly
Front Bearings - Lube Bank		2	Grease Gun	Weekly

NOTE: Unusual conditions, such as excessive dust, temperature extremes or excessive moisture may require more frequent lubrication of specific parts.

* See Lubricant and Hydraulic Oil Specifications for types of lubricants and oil to be used.

Symptom:	See Reasons:
Hoist will not raise body.	1, 2, 3
Conveyor won't run.	5, 6,7
Conveyor runs in jerks.	14
Spinner won't run.	4, 11
Spinner speed is not constant.	3, 8, 9
Hydraulic oil overheats	1, 10, 11, 12, 13

REASON	CORRECTION
1. Hydraulic oil level low.	Add hydraulic oil to reservoir to maintain level around mid-point of sight gauge.
2. Hydraulic Pump is not rotating.	1. PTO is disengaged. Shift into engagement. 2. Drive line has failed. Repair or replace. 3. Key in pump shaft has failed. Replace key. 4. U-joint pin or key has failed. Replace pin or key.
3. Worn pump.	Replace pump.
4. Jammed or frozen spinner motors.	Free up. If not possible, replace as required.
5. Jammed or frozen conveyor.	Free up conveyor.
6. Jammed or frozen conveyor hydraulic motor.	Replace motor.
7. Hydraulic motor shaft key sheared.	Replace key.
8. Pump speed is not adequate to provide sufficient flow to maintain spinner speed.	Increase engine speed.
9. Insufficient hydraulic oil flow at normal driving speeds.	Install higher percent PTO or use larger pump.
10. Excessive oil is being pumped.	1. PTO percentage too high. Change PTO to smaller percentage or use smaller pump. 2. Pump is too large. Do not exceed 25 GPM pumping rate. Change to smaller pump or use smaller percentage PTO. 3. Pressure drop in control valve is sufficient to run lightly loaded conveyor motor. Shut off pump drive by disengaging PTO shaft.
11. Worn motor (spinner or conveyor).	Motor heats up at an excessive rate (check for this heating when system is cold). Replace motor.
12. Improper or deteriorated hydraulic oil.	Replace hydraulic oil with proper specification oil and replace filter.
13. Pinched or obstructed hose, hydraulic line or fitting.	Clear obstruction or replace part. Straighten kinked hoses.
14. Driving too fast for application rate.	Shift truck transmission to a lower gear. Will not normally occur if within maximum application rates.

CAP SCREW GRADE IDENTIFICATION - MARKINGS ON HEAD

SAE GRADE 2 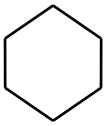 NO MARKINGS

SAE GRADE 5 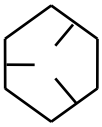 THREE MARKS - 120 DEGREES APART

SAE GRADE 8 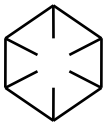 SIX MARKS - 60 DEGREES APART

USE GRADE 2 TORQUES FOR STAINLESS STEEL FASTENERS AND CARRIAGE BOLTS.

	TORQUE - FOOT-POUNDS					
CAP SCREW SIZE	GRADE 2		GRADE 5		GRADE 8	
	DRY	LUBE	DRY	LUBE	DRY	LUBE
1/4″	5	4	8	6	12	9
5/16″	11	8	17	13	25	18
3/8″	20	15	30	23	45	35
7/16″	30	24	50	35	70	55
1/2″	50	35	75	55	110	80
9/16″	65	50	110	80	150	110
5/8″	90	70	150	110	220	170
3/4″	100	120	260	200	380	280
7/8″	140	110	400	300	600	460
1″	220	160	580	440	900	650

This page is intentionally left blank.

Order from the **AUTHORIZED DEALER** in your area.

Always give the pertinent model and serial number.

Give part name, part number and the quantity required.

Give the correct address to where the parts are to be shipped, and the carrier if there is a preference.

Unless claims for shortages or errors are made immediately upon receipt of goods they will not be considered. Any part returns should be directed through the dealer from which they were purchased.

When broken goods are received, a full description of the damage should be made by the carrier agent on the freight bill. If this description is insisted upon, full damage can always be collected from the transportation company.

No responsibility is assumed for delay or damage to merchandise while in transit. Our responsibility ceases upon delivery of shipment to the transportation company from whom a receipt is received showing that shipment was in good condition when delivered to them, therefore, claims (if any) should be filed with the transportation company and not with New Leader Manufacturing.

If your claims are not being handled (by the transportation company) to your satisfaction, please call the Parts Manager at New Leader Manufacturing (319-363-8281) for assistance.

In the parts list the following symbols and abbreviations stand for:

* - Not Shown
AR – As Required
CS – Carbon Steel
SS – Stainless Steel

The parts listed under the different steel types (CS, 409 SS and 304 SS) are for that type of unit and do not necessarily mean the part is made of that type of steel.

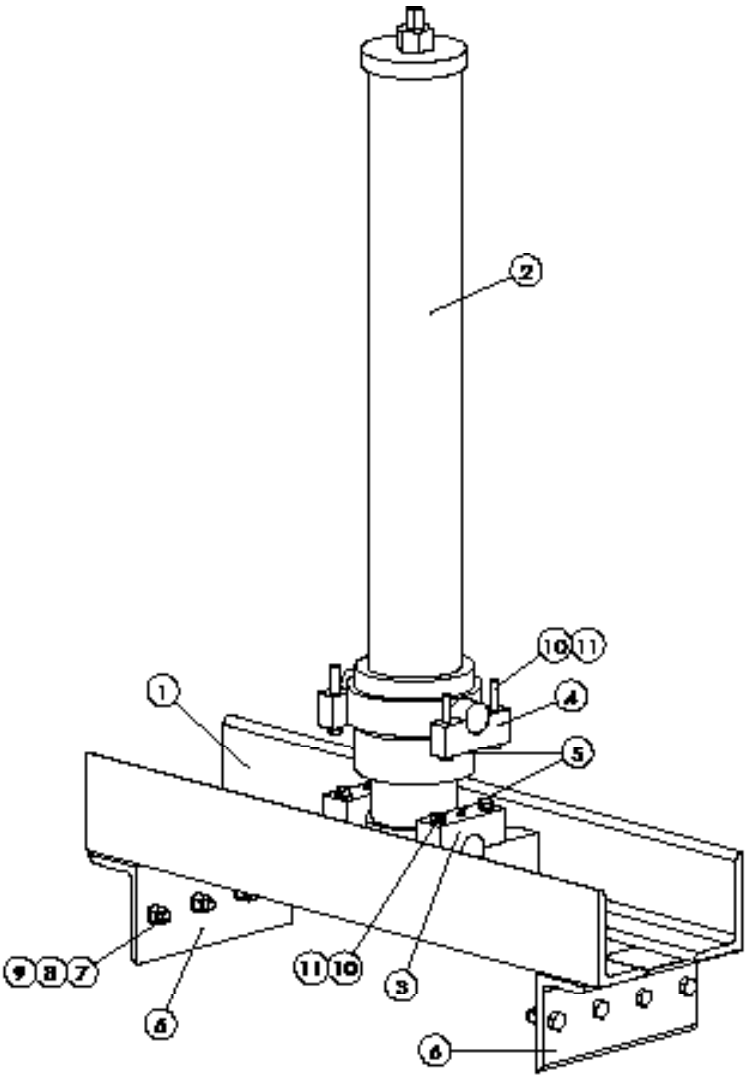
2
10
11
1
4
5
9
8
7
6
11
10
3
6

Body
Cradle Cont.

ITEM	PART NO.	DESCRIPTION	QTY
1	300370-AA	Cradle – Wldmt III 10′	1
	300370-AB	Cradle – Wldmt III 11′–12′	1
	300370-AC	Cradle – Wldmt III 13′–15′	1
2	300334-AA	Cylinder – Hydraulic Hoist 10′	1
	300334-AB	Cylinder – Hydraulic Hoist 11′	1
	300334-AC	Cylinder – Hydraulic Hoist 12′	1
	300334-AE	Cylinder – Hydraulic Hoist 13′,14′	1
	300334-AF	Cylinder – Hydraulic Hoist 15′	1
	300359-AA	Cylinder - Hydraulic Hoist Double 10′	1
	300359-AB	Cylinder - Hydraulic Hoist Double 11″	1
	300359-AC	Cylinder - Hydraulic Hoist Double 12′	1
	300359-AD	Cylinder - Hydraulic Hoist Double 13′	1
	300359-AE	Cylinder - Hydraulic Hoist Double 14′	1
	300359-AF	Cylinder - Hydraluic Hoist Double 15′	1
3	300649-AC	Block – Cap Lower 10′–12′	2
	300649-AD	Block – Cap Lower 13′–15′	2
4	300649-AA	Block – Cap Upper 10′–12′	2
	300649-AB	Block – Cap Upper 13′–15′	2
5	34874	Zerk – Drive	4
6	88828	Angle – Mount 6 x 4	2
7	89526	Cap Screw – 5/8 x 2 GR 8	8
8	20716	Washer – Lock 5/8	AR
9	89591	Nut – Hex 5/8	8
10	300644	Cap Screw - 5/8 x 3-1/2 10′-12′	8
	300645	Cap Screw - 3/4 x 3-1/2 13′-15′	8
11	20717	Washer – Lock 3/4	AR

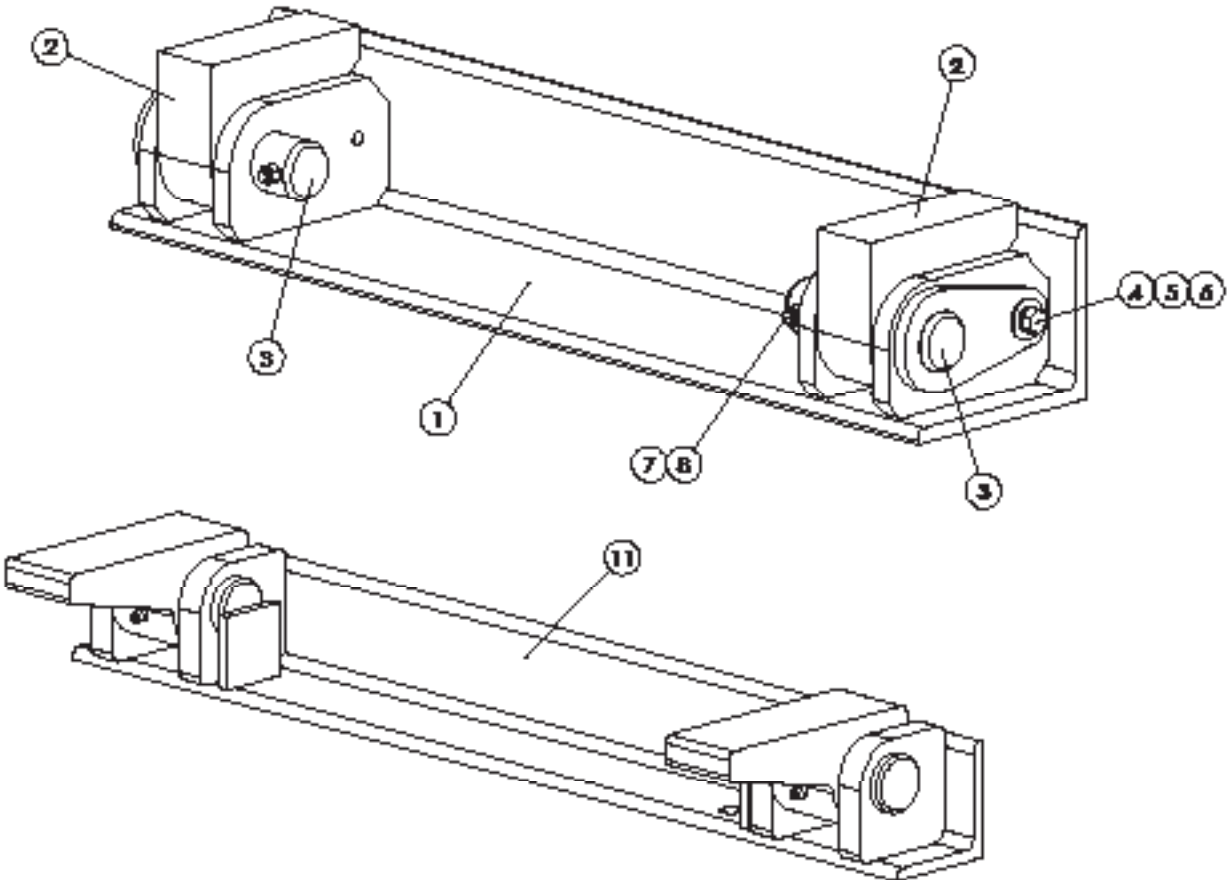

ITEM	PART NO.	DESCRIPTION	QTY
	88613	Hinge – Assy 2" Greaseless, Includes 1–9	
	300398	Hinge – Assy 2" Relubeable 6 x 8, Includes 1,2,4–10	
1	88608	Hinge – Wldmt Angle	1
2	88609	Block – Hinge, Greaseless	2
	300399	Block – Hinge, Greaseable	2
3	88605	Bearing – Sleeve, Greaseless Hinge	2
4	88612	Pin – Wldmt Hinge	2
5	20695	Cap Screw – 1/2 x 1-1/2	2
6	20714	Washer – Flat 1/2	2
7	20129	Washer – Lock 1/2	2
8	20073	Cap Screw – 3/8 x 2-1/2	2
9	20678	Nut – Lock 3/8	2
10	* 6072	Zerk – Grease, Greaseable Hinge	2
11	302315	Hinge – Assy 2" Greaseable 4 x 4	1

* - Not Shown

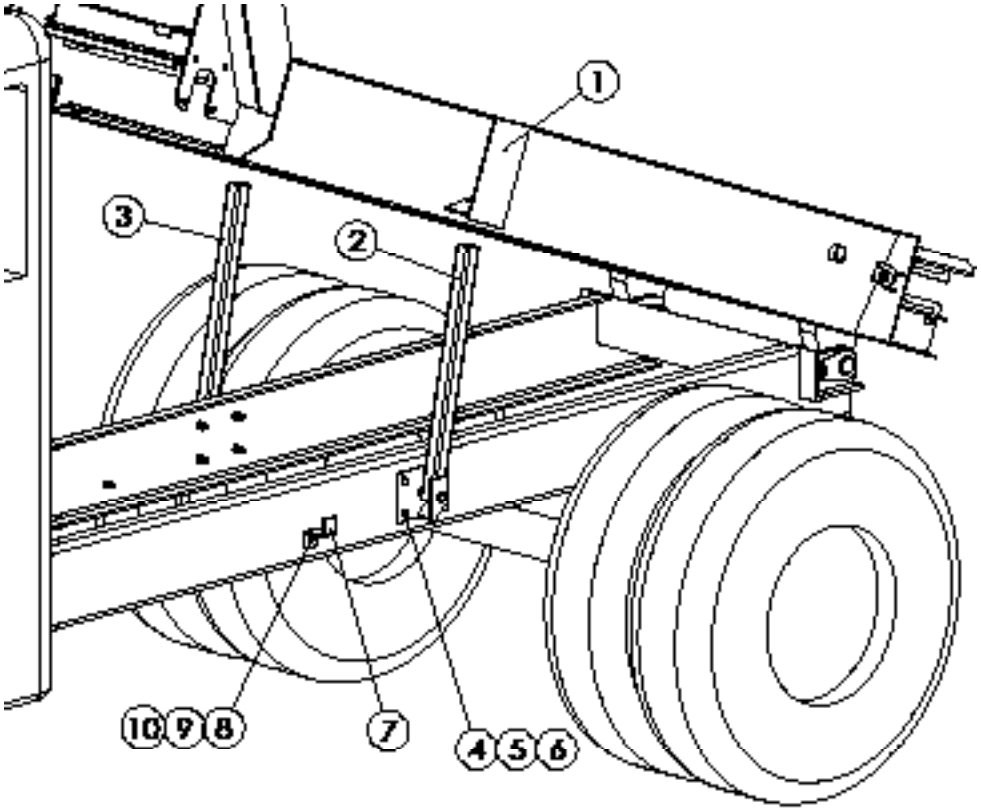

ITEM	PART NO.		DESCRIPTION	QTY
	CS	SS		
1	88917	97593	Prop – Wldmt Body Upper	2
2	88923-AA	88923-AA	Prop – Wldmt Body Lower LH	1
3	88923-AB	88923-AB	Prop – Wldmt Body Lower RH	1
4	89522	89522	Cap Screw – 1/2 x 1-3/4 GR 8	8
5	20714	20714	Washer – Lock 1/2	8
6	89643	89643	Nut – Hex 1/2	8
7	89970	89970	Plate – Rest Body Prop	2
8	20069	20069	Cap Screw – 3/8 x 1-1/2	2
9	20712	20712	Washer – Lock 3/8	2
10	20644	20644	Nut – Hex 3/8	2

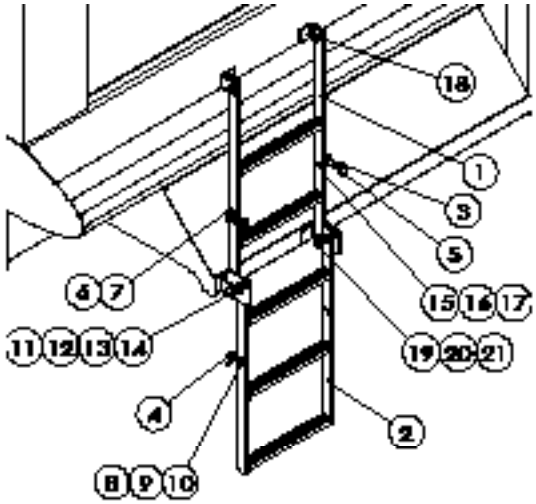

ITEM	PART NO.		DESCRIPTION	QTY
	CS	SS		
	89041	300453	Ladder – Kit Inspection	
1	89043	300454	Ladder – Wldmt Upper	1
2	89044	300456	Ladder – Wldmt Lower	1
3	73344	73344	Bracket – Anchor	2
4	150043	150043	Bracket – Hood	2
5	73343	73343	Hook – Rubber	2
6	20007	42448	Cap Screw – 1/4 x 1-1/2	2
7	20676	42034	Nut – Lock 1/4	2
8	20572	44483	Screw - #10 x 3/4	4
9	20709	44451	Washer – Lock #10	4
10	20641	47295	Nut – Hex #10	4
11	20366	36411	Bolt – Carriage 1/2 x 1-1/2	2
12	20695	36426	Washer – Flat 1/2	2
13	88638	88638	Tube – 3/4 x 3/8	2
14	20680	39016	Nut – Lock 1/2	2
15	20035	300458	Cap Screw – 5/16 x 7/8	2
16	20711	36419	Washer – Lock 5/16	2
17	20643	36413	Nut – Hex 5/16	2
18	89040	97535	Angle – Mount Ladder	4
19	20129	36539	Cap Screw – 1/2 x 1-1/2	4
20	20714	36422	Washer – Lock 1/2	4
21	20646	36416	Nut – Hex 1/2	4

Body

Cab Shield

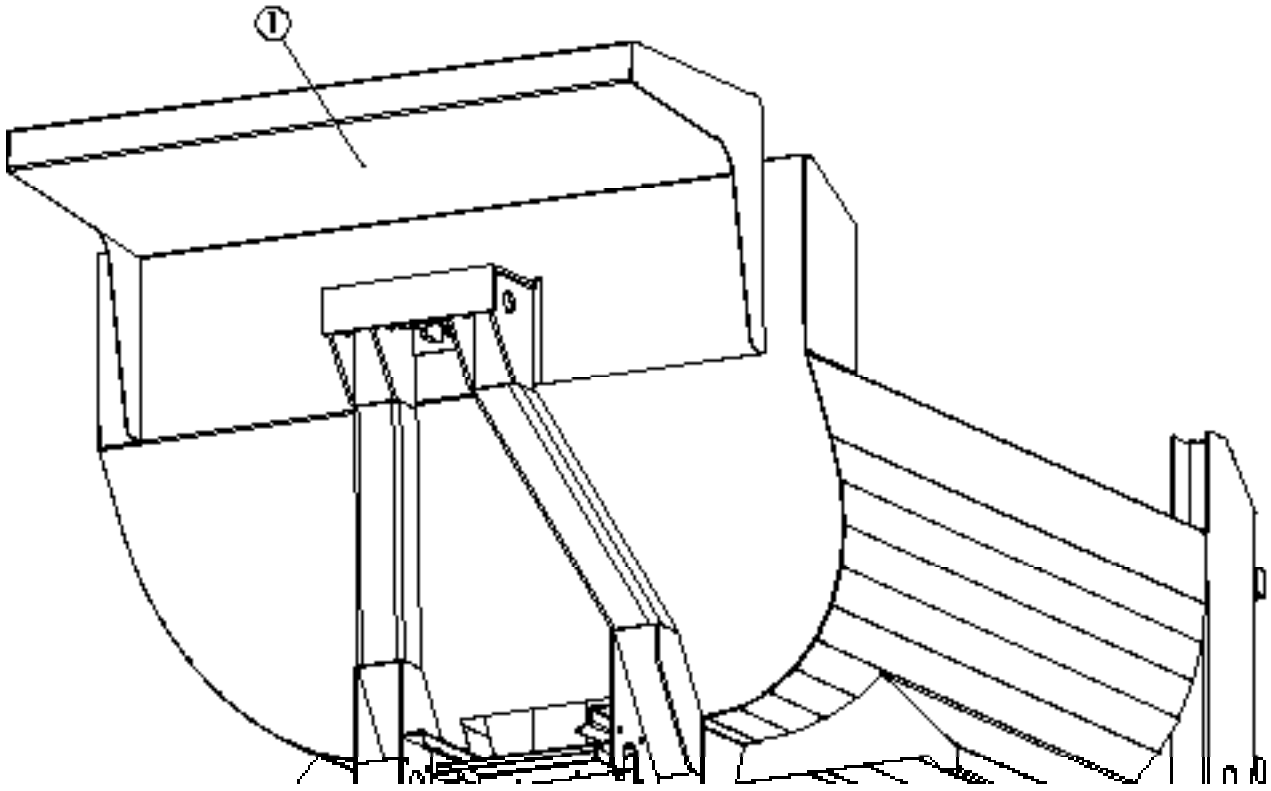

ITEM	PART NO.			DESCRIPTION	QTY
	CS	304 SS	201 SS		
1	306261-AA	306262-AA	309449-AA	Cab Shield – Wldmt 78" x 16"	1
	306261-AB	306262-AB	309449-AB	Cab Shield – Wldmt 78" x 22"	1
	306261-AC	306262-AC	309449-AC	Cab Shield – Wldmt 78" x 32"	1
			309449-ADA	Cab Shield - Wldmt 78" x 40"	1
	306261-AE	306262-AE	309449-AE	Cab Shield – Wldmt 84" x 16"	1
	306261-AF	306262-AF	309449-AF	Cab Shield – Wldmt 84" x 22"	1
	306261-AG	306262-AG	309449-AG	Cab Shield – Wldmt 84" x 32"	1
	306261-AH	306262-AH	309449-AH	Cab Shield – Wldmt 84" x 40"	1
	306261-AI	306262-AI	309449-AI	Cab Shield – Wldmt 95" x 16"	1
	306261-AJ	306262-AJ	309449-AJ	Cab Shield – Wldmt 95" x 22"	1
	306261-AK	306262-AK	309449-AK	Cab Shield – Wldmt 95" x 32"	1
	306261-AL	--	309449-AL	Cab Shield – Wldmt 95" x 40"	1

Body

Side Boards - Bolt-In

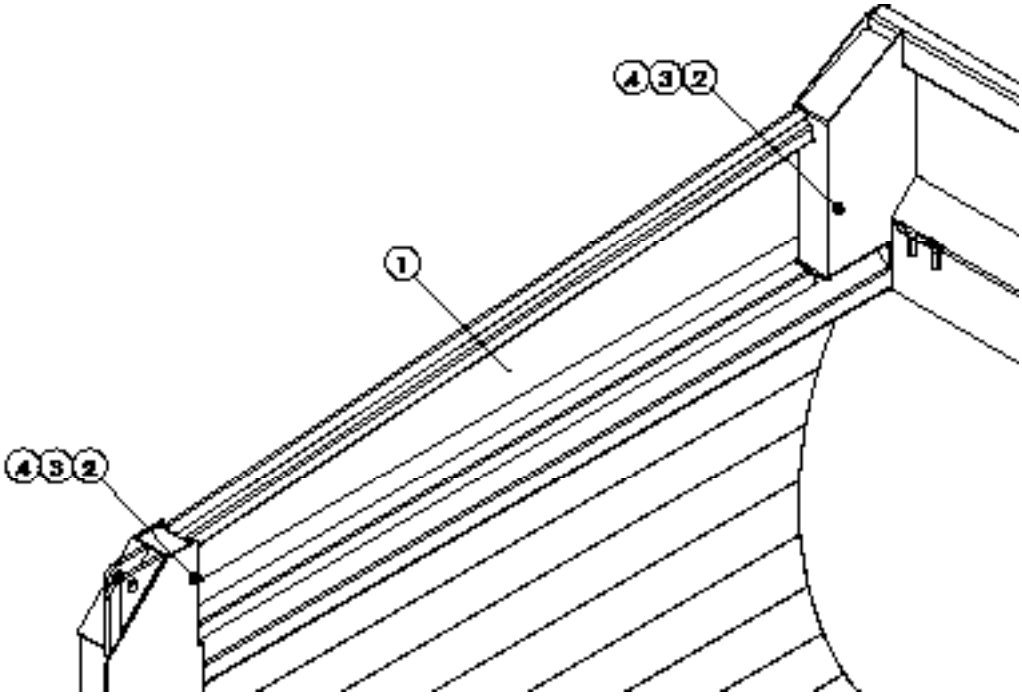

Body

Side Boards - Bolt-In Cont.

ITEM	PART NO.		DESCRIPTION	QTY
	CS	304 SS		
1			Sideboard – Wldmt:	
	302590-AC	302591-AC	LH 10	1
	302590-AD	302591-AD	RH 10	1
	302590-AE	302591-AE	LH 11	1
	302590-AF	302591-AF	RH 11	1
	302590-AG	302591-AG	LH 12	1
	302590-AH	302591-AH	RH I 12	1
	302590-AM	302591-AM	LH 13	1
	302590-AN	302591-AN	RH 13	1
	302590-AK	302591-AK	LH 14	1
	302590-AL	302591-AL	RH 14	1
	302590-AO	302591-AO	LH 15	1
	302590-AP	302591-AP	RH 15	1
2	20145	300302	Cap Screw – 1/2 x 5-1/2	4
3	20714	36422	Washer – Lock 1/2	4
4	20646	36416	Nut – Hex 1/2	4

Body Mounting

ITEM	PART NO.	DESCRIPTION	QTY
1	88926	Guide – Body Down	2
2	89522	Cap Screw – .5-13NC X 1.75 GR8	4
3	20714	Washer – Lock 1/2	4
4	89643	Nut – Hex 5-13NC GR 8	4
5	20695	Washer - Flat .5	4

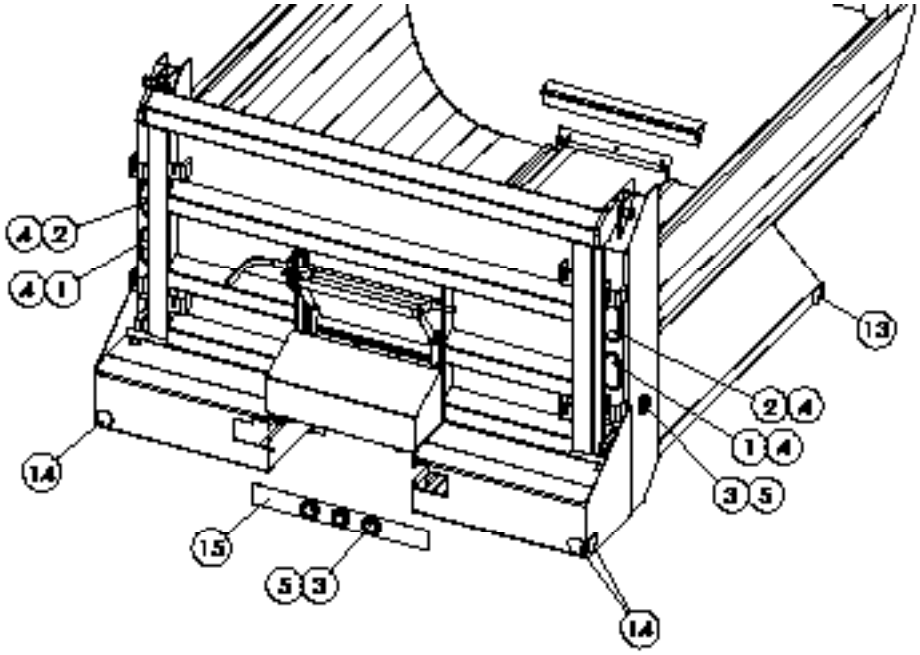

ITEM	PART NO.	DESCRIPTION	QTY
1	89988	Light – Red Oval	2
	97633	Light – Red Oval LED	2
2	89989	Light – Yellow Oval	2
	97634	Light – Yellow Oval LED	2
3	89990	Light – Red Round	5
	97635	Light – Red Round LED	5
4	89991	Grommet – Oval	4
5	89992	Grommet – Round	5
6	* 89993	Junction Box	1
7	* 89994	Fitting – Compression	1
8	* 89995	Fitting – Compression	2
9	* 89996	Fitting – Compression	1
10	* 89997	Harness	1
11	* 89998	Harness – RH	1
12	* 89999	Harness – LH	1
13	89978	Reflector – Yellow	2
14	89979	Reflector – Red	4
15	88688	Bar – 3-Light Cluster	1
16	* 97636	Adapter – LED only	1

* - Not Shown

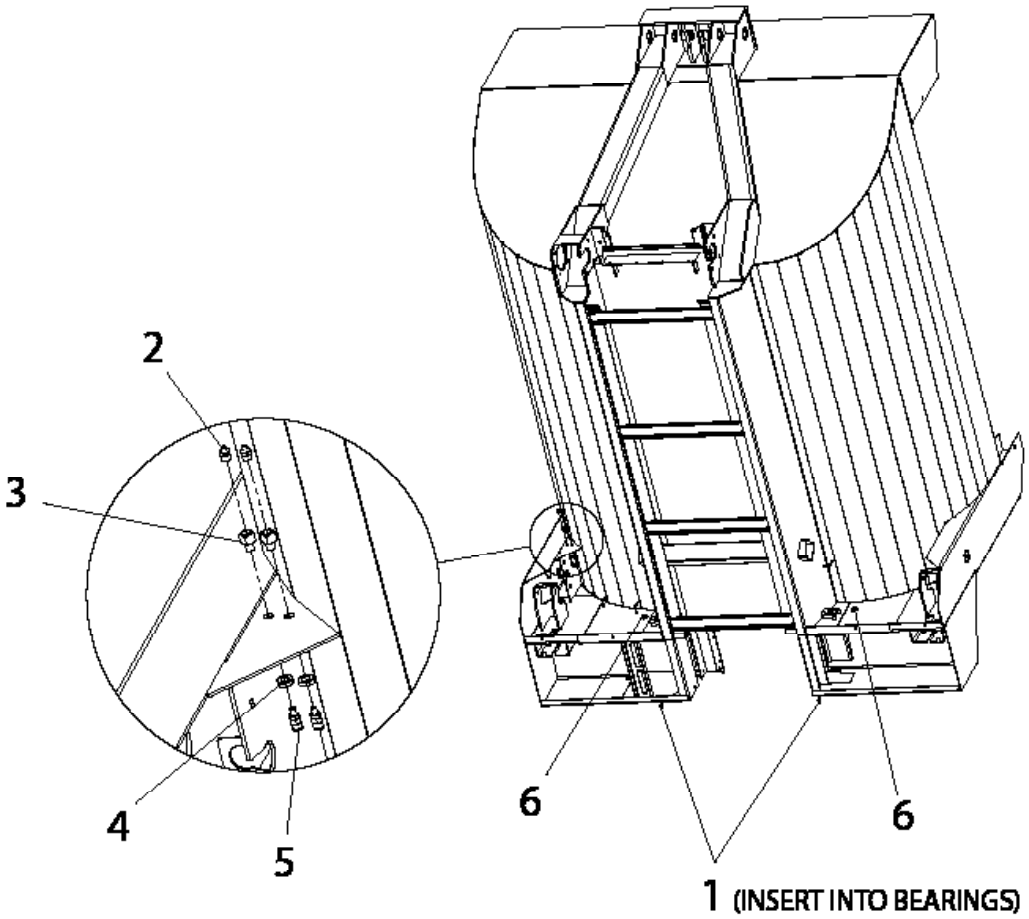

ITEM	PART NO.	DESCRIPTION		QTY
1	301336	Fitting - 90 Male Swivel 1/8 NPT		2
2	6069	Zerk - Grease		2
3	301332	Connector - Bulkhead		2
4	301333	Nut - Lock, Connector		2
5	301334	Fitting - Straight Male 1/4 NPT		2
6	19383	Grommet - Rubber		2
7	*301338	Tube - 1/4 Black Nylon	per ft.	15

* - Not Shown

Lubrication

Body Lubrication Cont.

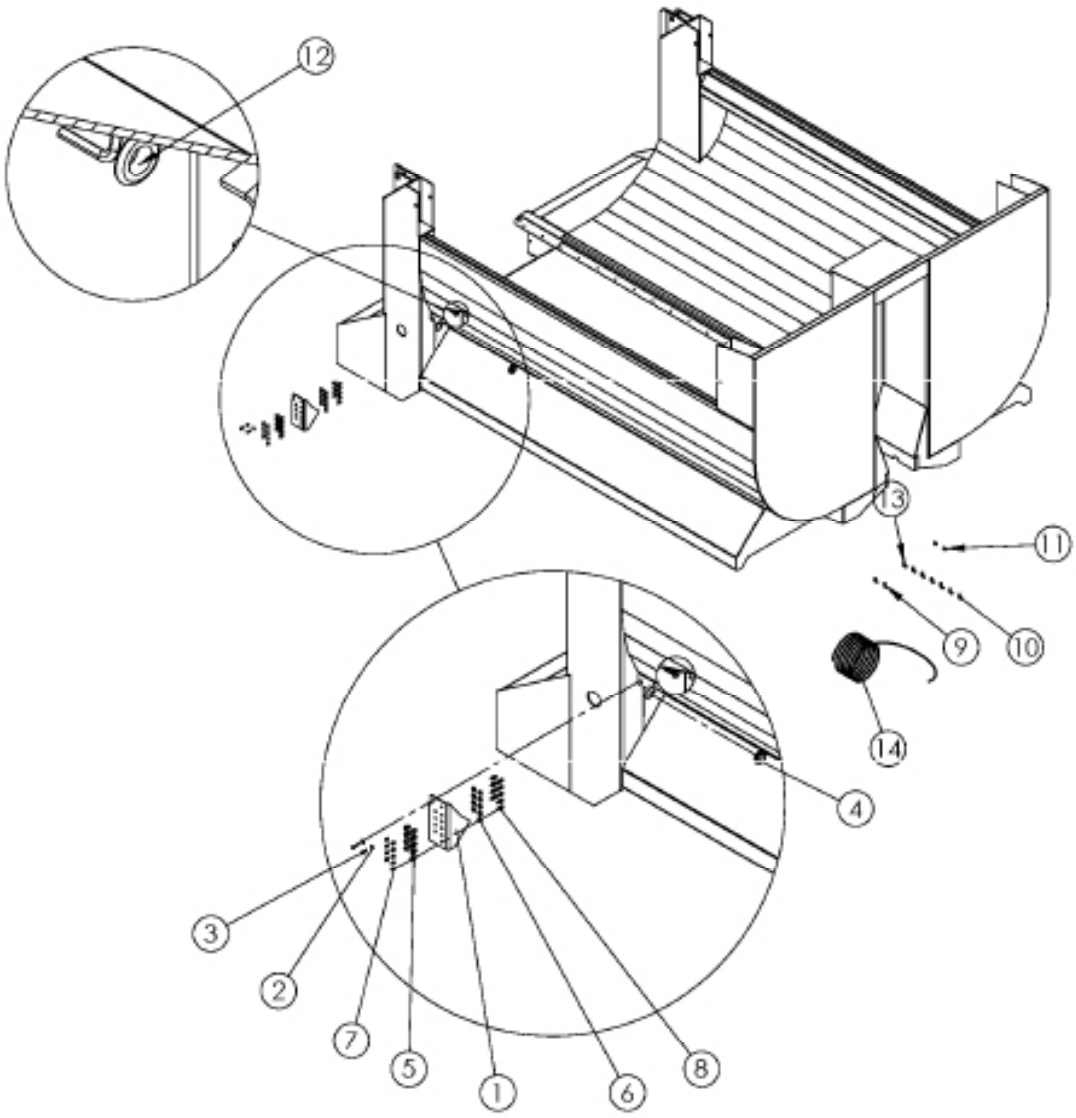

Lubrication

Body Lubrication Cont.

ITEM	PART NO.	DESCRIPTION		QTY
1	305109	Plate – Lube Bank RH T1-2 304		1
2	36423	Washer – Flat 1/4 SS		2
3	36394	Cap Screw – 1/4 x 7/8 SS		2
4	34129	Grommet – Rubber		1
5	301332	Connector – Bulkhead		AR
6	301333	Nut – Lock, Connector		AR
7	6069	Zerk – Grease		AR
8	301334	Fitting – Straight Male 1/4-28		AR
9	301335	Fitting – 90 Male 1/4-28		2
10	301336	Fitting – 90 Male Swivel 1/8 NPT		AR
11	306349	Connector – Zerk Lock		2
12	19383	Grommet – Rubber 3/4 ID		2
13	301336	Fitting – 90 Male Swivel 1/8 NPT		2
14	301338	Tube – 1/4 Black Nylon	Per Foot	AR

AR - As Required

Tailgate

Tailgate Latch

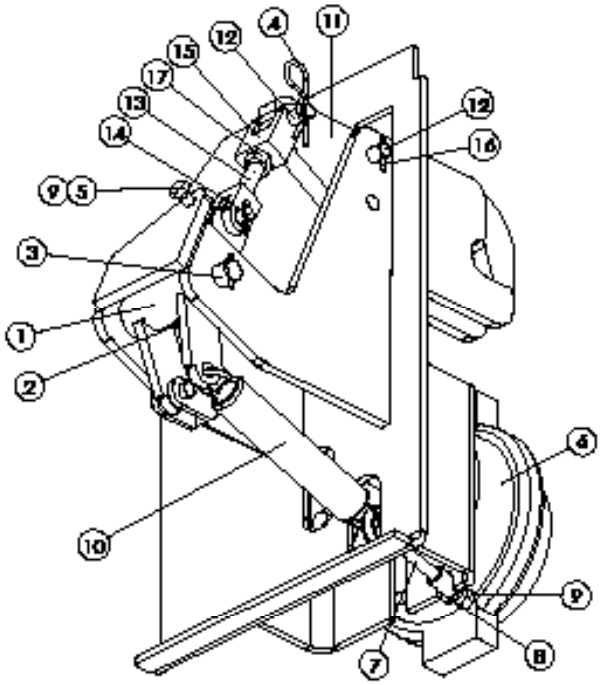

ITEM	PART NO.		DESCRIPTION	QTY
	CS	SS		
1	88767-AA	88767-AA	Pivot – Wldmt LH	1
	* 88767-AB	88767-AB	Pivot – Wldmt RH	1
2	34874	34874	Zerk – Grease	1
3	88724	97485	Pin – Clevis 3/4 x 5	1
4	40576	36429	Pin – Hair	1
5	20068	36399	Cap Screw – 3/8 x 1-1/4	1
6	307024	307024	Modification – Air Tailgate	1
7	88773	88773	Eyebolt – Tension	1
8	20693	36425	Washer – Flat 3/8	1
9	20644	36414	Nut – Hex 3/8	3
10	88604	88604	Spring – Extension	1
11	88772	88772	Plate – Hook	1
12	21024	96247	Pin – Clevis 1/2 x 2-1/4	2
13	88770	88770	Yoke – Wldmt	1
14	21027	99671	Pin – Clevis 1/2 x 1-1/2	1
15	88771	88771	Yoke – Driven	1
16	20817	36427	Pin – Cotter 1/8 x 1	3
17	20646	36417	Nut – Hex 5/8	1

* - Not Shown

Tailgate

Tailgate - w/ Feedgate

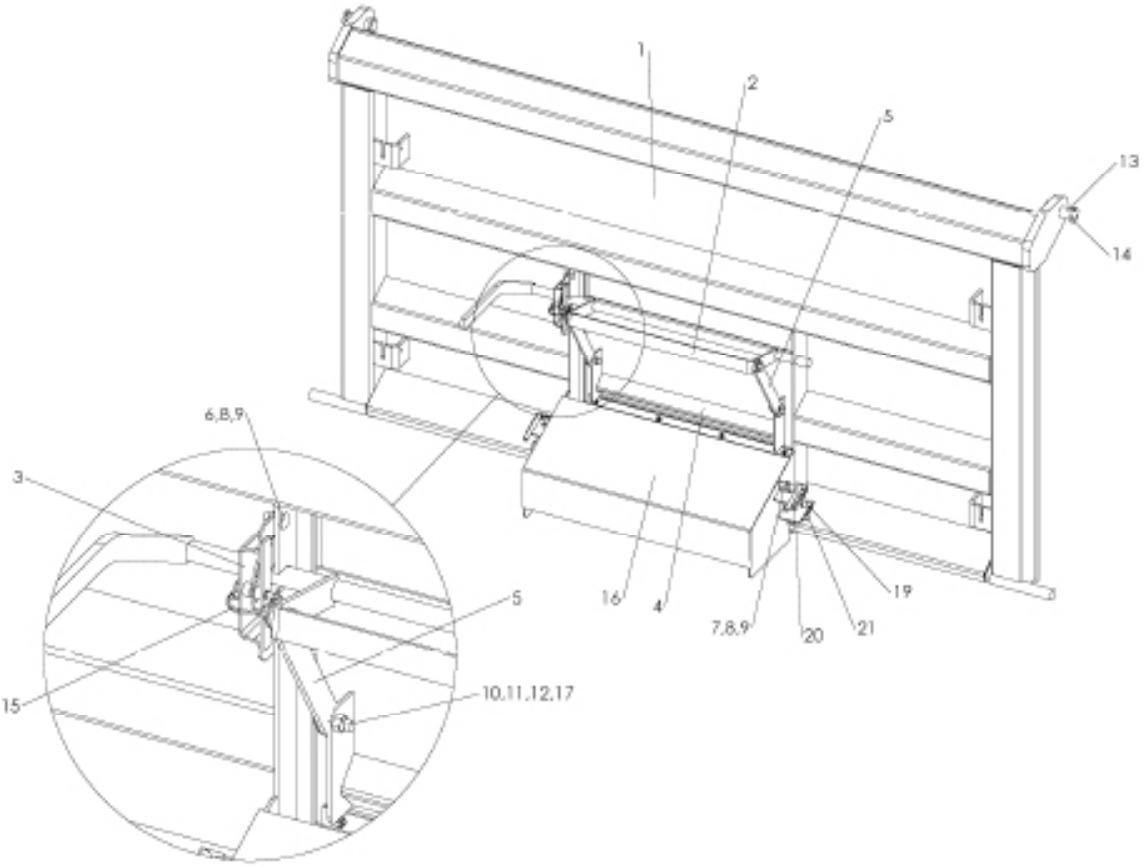

Body

Tailgate - w/ Feedgate Cont.

ITEM	PART NO.			DESCRIPTION	QTY
	CS	304 SS	201 SS		
1	304066	304068	309412	Tailgate – Wldmt	1
2	88632	97504	97504	Pivot – Feedgate Rear	1
3	302550	302551	309415	Pivot – Lock Wldmt	1
4	89855	97513	309416	Feedgate – Assy Rear	1
5	88637	97518	97518	Link – Linkage	2
6	20318	36408	36408	Bolt – Carriage 3/8 x 1	2
7	20067	36398	36398	Cap Screw – 3/8 x 1	4
8	20712	36420	36420	Washer – Lock 3/8	6
9	20644	36414	36414	Nut – Hex 3/8	6
10	20129	36539	36539	Cap Screw – 1/2 x 1-1/2	4
11	20695	36426	36426	Washer – Flat 1/2	4
12	20680	39016	39016	Nut – Lock 1/2	4
13	88780	88780	88780	Pin – Clevis 1-1/4 x 4	2
14	88824	88824	88824	Pin – Lynch 1/4 x 1-1/4	2
15	85359	97519	97519	Pin – Snap 1/4	1
16	305878	303265	309418	Shield – Wldmt Feedgate	1
17	88638	88638	88638	Tube – 3/4 x 3/8	4
18	* 89942	89942	89942	Chain – 3/8 x 48	2
19	305877	303268	303265	Mount – Wldmt Shield	2
20	305876	301654	301654	Pin – Wldmt Feedgate Shield	2
21	40576	36429	36429	Pin – Hair	2

* - Not Shown

Tailgate

Feedgate - Rear

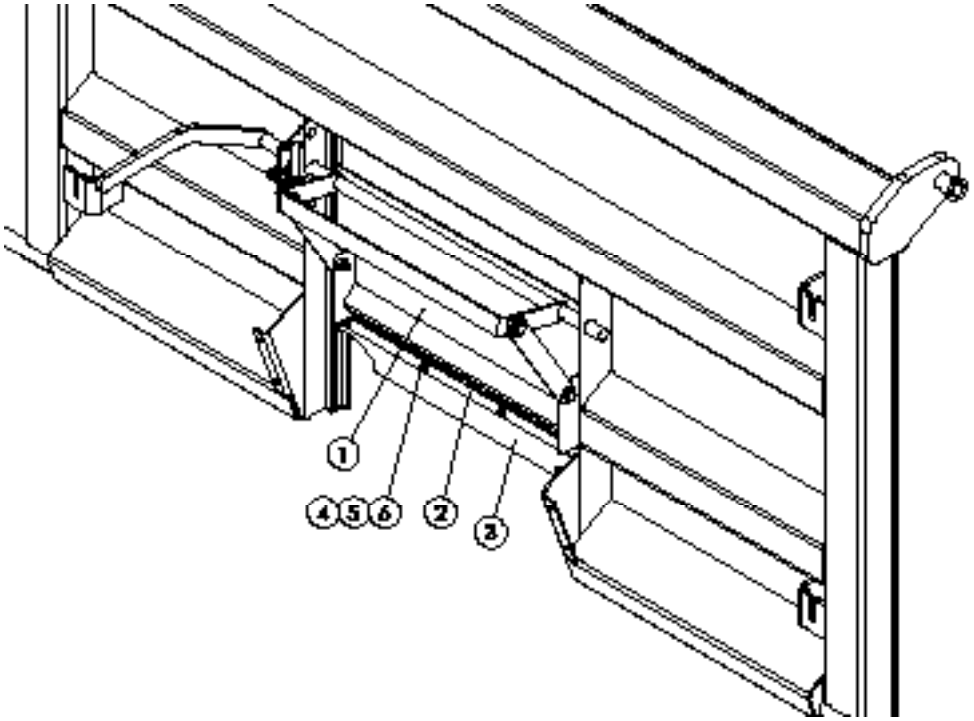

ITEM	PART NO.			DESCRIPTION	QTY
	CS	304 SS	304 SS		
	89855	97513	309416	Feedgate – Assy Rear	
1	96500	97514	309417	Feedgate – Wldmt Rear	1
2	88652	88652	309420	Retainer – Sealer	1
3	88651	88651	88651	Belt – Sealer	1
4	20005	36395	36395	Cap Screw – 1/4 x 1	4
5	20710	36418	36418	Washer – Lock 1/4	4
6	20642	36412	36412	Nut – Hex 1/4	4

This page is intentionally left blank.

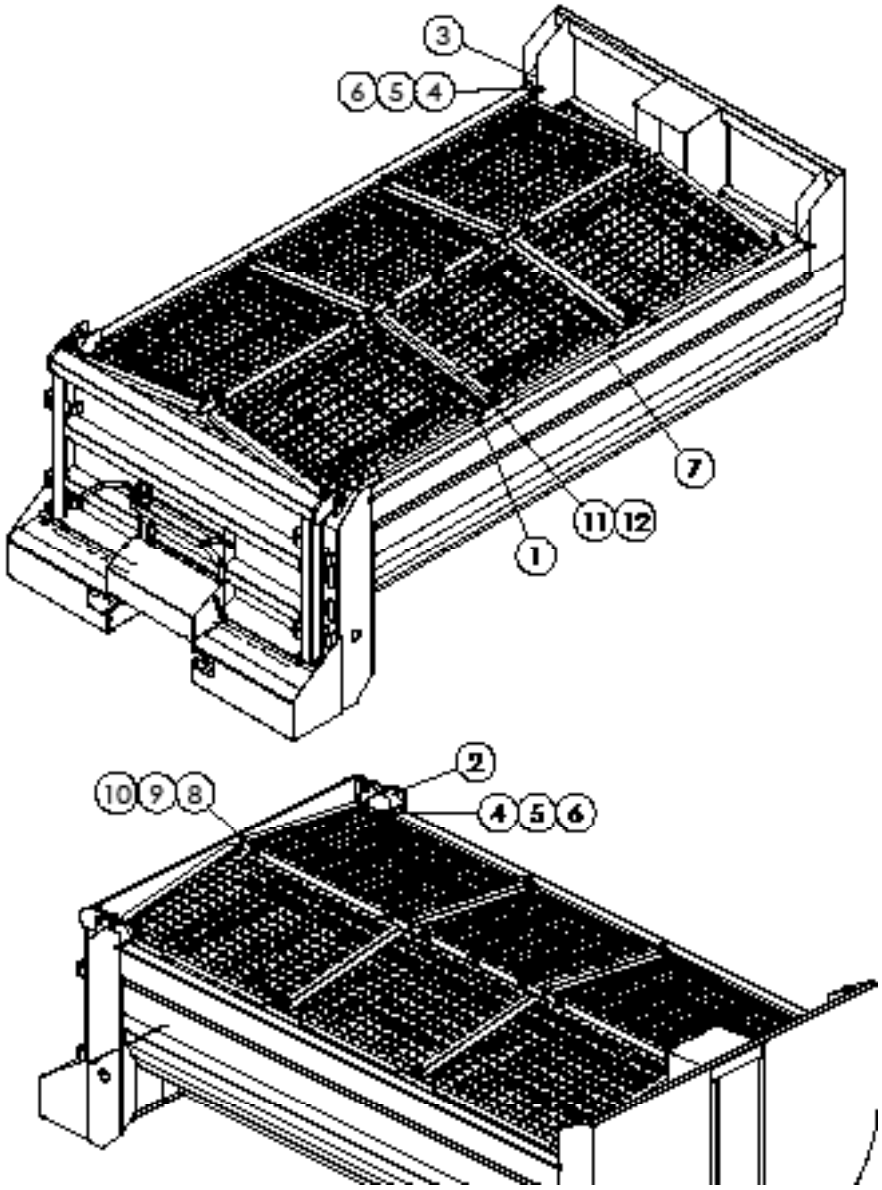

UNIT		FRONT	MIDDLE	REAR
Type I & II	Type III			
09/10	10	44.5″	56.5″	NA
10/11	11	56.5″	56.5″	NA
11/12	12	56.5″	68.5″	NA
12/13	13	68.5″	68.5″	NA
13/14	14	49″	44.5″	56.5″
14/15	15	49″	56.5″	56.5″

Screens
Single Lift Cont.

ITEM	PART NO.	DESCRIPTION	QTY
1	301831-AA	Screen – Wldmt 42 x 44.5	AR
	301831-AB	Screen – Wldmt 42 x 56.5	AR
	301831-AC	Screen – Wldmt 42 x 68	AR
	301831-AD	Screen – Wldmt 42 x 49	AR
2	301432	Spacer – Wldmt Rear	2
3	301431	Spacer – Wldmt Front	2
4	20145	Cap Screw – 1/2 x 5-1/2	4
5	20714	Washer – Lock 1/2	4
6	20646	Nut – Hex 1/2	4
7	301578-AA	Frame – Wldmt Screen 10	1
	301578-AB	Frame – Wldmt Screen 11	1
	301578-AC	Frame – Wldmt Screen 12	1
	301578-AD	Frame – Wldmt Screen 13	1
	301578-AE	Frame – Wldmt Screen 14	1
	301578-AF	Frame – Wldmt Screen 15	1
8	20131	Cap Screw – 1/2 x 2	AR
9	20714	Washer – Lock 1/2	AR
10	20646	Nut – Hex 1/2	AR
11	20130	Cap Screw – 1/2 x 1-3/4	AR
12	20680	Nut – Lock 1/2	AR

AR - As Required

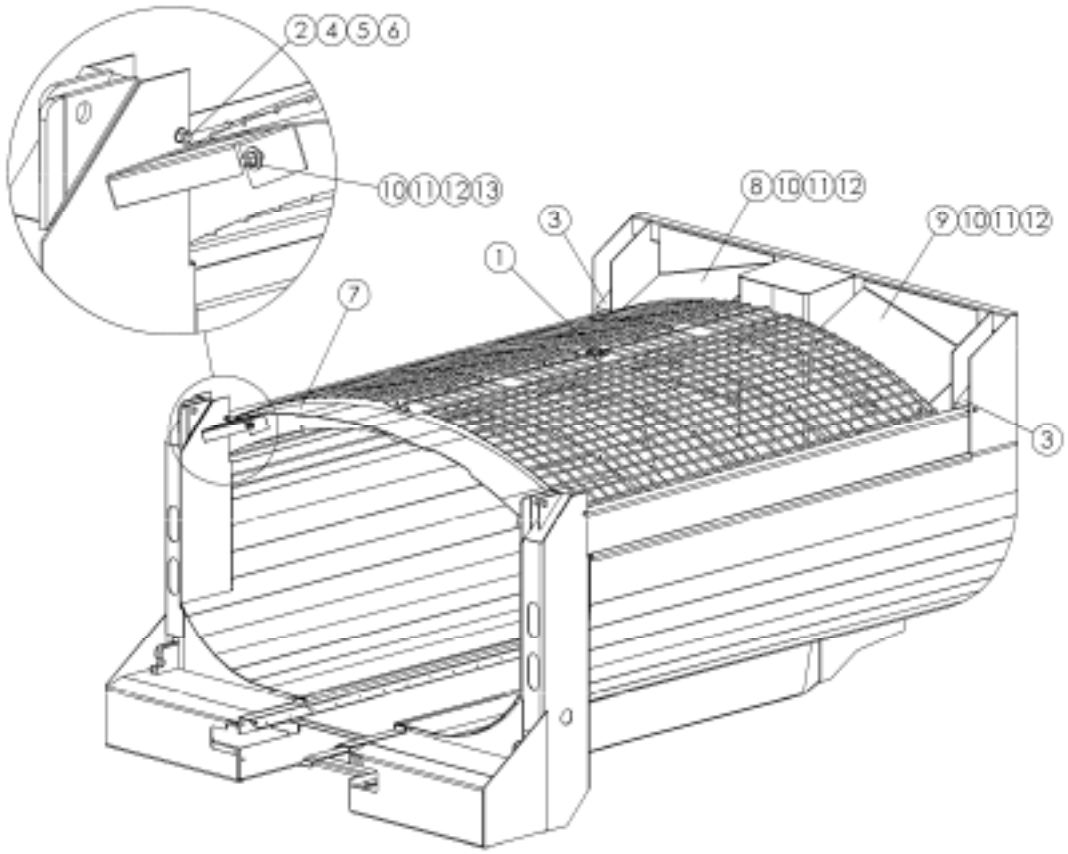
2 4 5 6
10 1 2 13
8 10 11 12
9 10 11 12
3
1
7
3

Screens
Domed Cont.

ITEM	PART NO.	DESCRIPTION	QTY
	301584	Hardware – Kit Screens, Includes 4-6	
	303406	Hardware – Kit Deflectors, Includes 10-13	
1	301421-AA	Screen - Wldmt Domed 96"	1
	301421-AB	Screen – Wldmt Domed 108"	1
	301421-AC	Screen – Wldmt Domed 120"	1
	301421-AD	Screen – Wldmt Domed 132"	1
	301421-AE	Screen – Wldmt Domed 144"	1
	301421-AF	Screen – Wldmt Domed 158"	1
2	301432	Spacer – Wldmt Rear	2
3	301431	Spacer – Wldmt Front	2
4	20145	Cap Screw – 1/2-13x 5-1/2	4
5	20714	Washer – Lock 1/2	4
6	20646	Nut – Hex 1/2	4
7	303403	Deflector – Screens Rear	1
8	303404-AA	Deflector – Screens Front LH	1
9	303404-AB	Deflector – Screens Front RH	1
10	20128	Cap Screw – 1/2-13 x 1-1/4	11
11	20695	Washer – Flat 1/2	11
12	20714	Washer – Lock 1/2	11
13	20646	Nut – Hex 1/2	11

#4 Belt-Over-Chain Conveyor

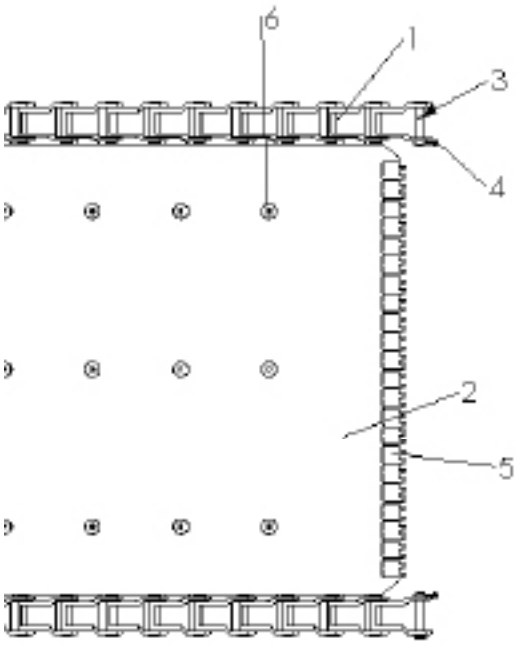

ITEM	PART NO.	DESCRIPTION		QTY
	305618	BOC – Assy #4 28"	Specify Length	
		Includes: 1-4, 6-8		
1	305630	Chain – Wldmt #4 28"	Specify Length	1
2	88942	Belt – Specify Type & Length		1
3	36697	Pin – Clevis		AR
4	20817	Pin – Cotter 1/8 x 1		AR
5	73317	Lacing – 23" Wide		1
6	305646	Screw - #4 BOC 1/4 x 9/16		AR

AR - As Required

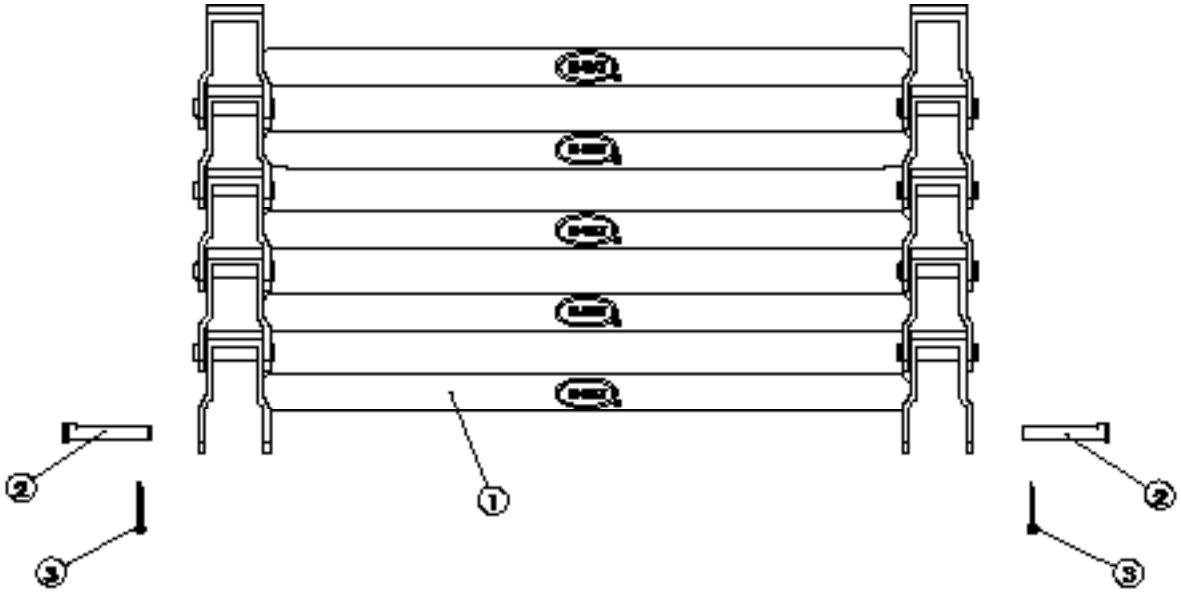

ITEM	PART NO.	DESCRIPTION		QTY
1	300360	Chain – Wldmt #3 28"	Specify Length	1
2	36697	Pin – Clevis		AR
3	20817	Pin – Cotter		AR

AR - As Required

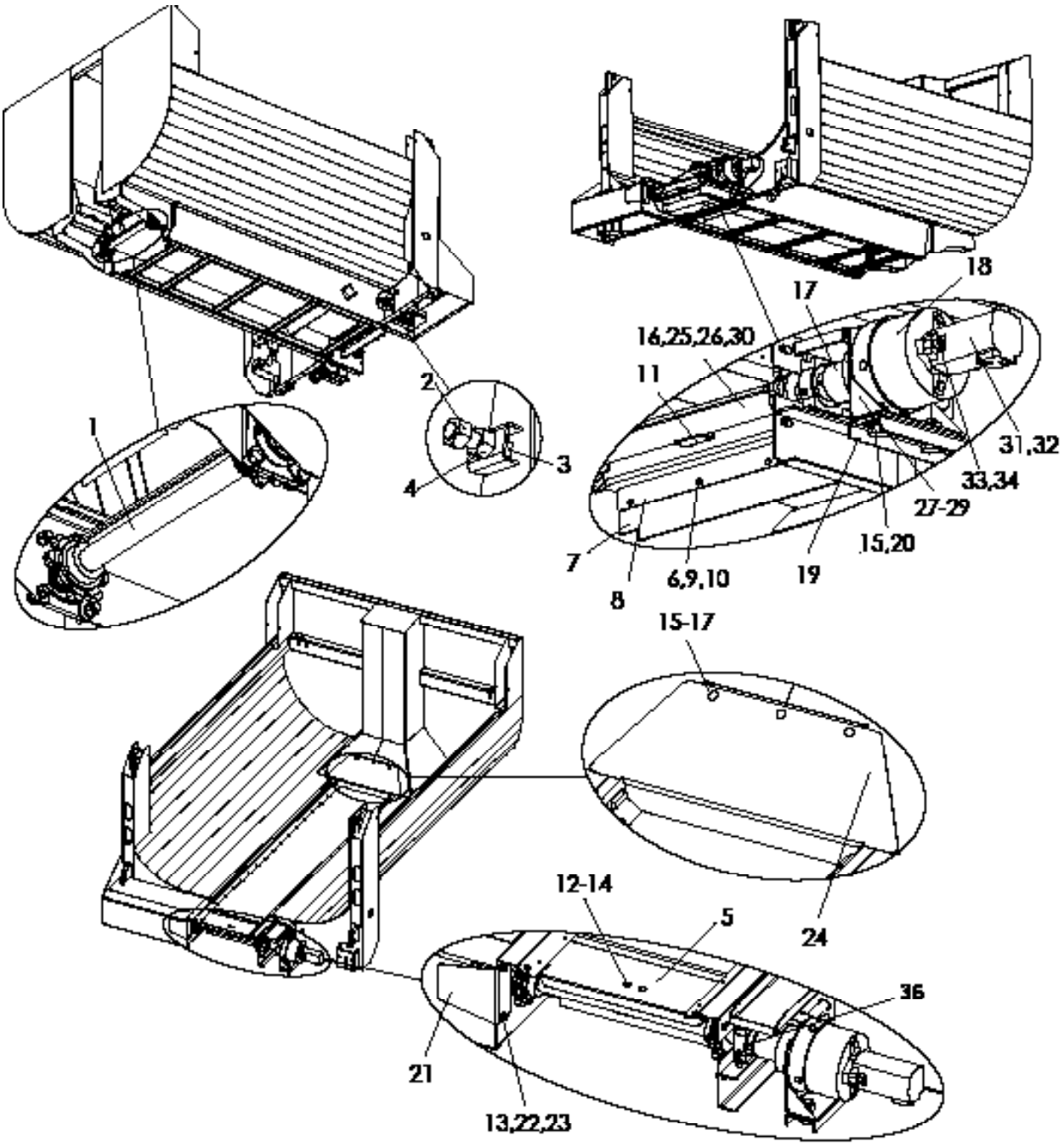

NOTE: RH Access Cover Removed for Clarity.

Conveyor
Drive/Idler Cont.

ITEM	PART NO.		DESCRIPTION	QTY
	CS	304 SS		
1	88911	88911	Shaft - Drive Main Front	1
2	88797	88797	Bolt - Wldmt Take-up	2
3	39110	39110	Nut - Wldmt	2
4	36509	36509	Nut - Hex 1-8NC SS	2
5	88803 89034	97524	Take-up - Wldmt #3 Take-up - Wldmt #4	1 1
6	20005	36395	Cap Screw - 1/4-20NC x 1 SS	4
7	88789	88789	Belt - Wiper Rear Inner	1
8	88652	88652	Retainer - Sealer Feedgate	1
9	20710	36418	Washer - Lock 1/4 SS	4
10	20642	36412	Nut - Hex 1/4-20 NC	4
11	88671	97527	Keeper - Shaft Drive 304	1
12	20318	36408	Bolt - Carriage 3/8 x 1 SS	5
13	20712	36420	Washer - Lock 3/8 SS	13
14	20644	36414	Nut - Hex 3/8 SS	5
15	20719	20719	Washer - Lock 1	2
16	88782	88782	Shaft - Drive Main Rear	1
17	42279	42279	Key - Square 1/2 x 2-1/2	1
18	88601	88601	Gear Case - Planetary 25:1	1
19	88804	88804	Plate - Slide	1
20	20205-X1	20205-X1	Cap Screw - 1-8NC x 2	2
21	89845	97528	Cover - Wldmt Access LH 304	1
22	20693	36425	Washer - Flat 3/8 SS	6
23	20065	36293	Cap Screw - 3/8-16NC x 3/4 SS	6
24	300357	300544	Cover - Skirt Access T3 304	1
25	6131	6131	Key - Square 3/8 x 3/8 x 1-1/2	4
26	88276	88276	Sprocket	4
27	88807	88807	Mount - Wldmt	1
28	20714	20714	Washer - Lock 1/2	8
29	20127-X1	20127-X1	Cap Screw- 1/2-13NC x 1 GR8	8
30	22511-X1	22511-X1	Bearing	2

* - Not Shown See Idler Spring Modification - Type III parts list for idler details

Conveyor
Drive/Idler Cont.

ITEM	PART NO.		DESCRIPTION	QTY
31	88725	88725	O-Ring	1
32	310248	310248	Motor - Hyd 4.9 CIS w/ M12 Sensor	1
	89709	89709	Motor - Hyd 4.9 CIS w/ M12 Sensor	1
	89720	89720	Motor - Hyd 4.9 CIS	1
33	30227	30227	Washer - Lock Socket 1/2	2
34	89701	89701	Cap Screw - Socket 1/2-13NC x 1-1/5 GR8	2
35	*313083	*313083	Cover - Access RH 304	1
36	311172	311172	Seal - V-Ring 2"	1
37	6465	6465	Bearing - 4BF 2" Bore	2
38	89526	89526	Capscrew - .625-11NC X 2 Gr8	8
39	20716	40957	Washer - Lock .625	8
40	89591	89591	Nut - Hex .625-11NC Gr8	8

* - Not Shown See Idler Spring Modification - Type III parts list for idler details

This page is intentionally left blank.

Conveyor

Chain Shield - #4 BOC

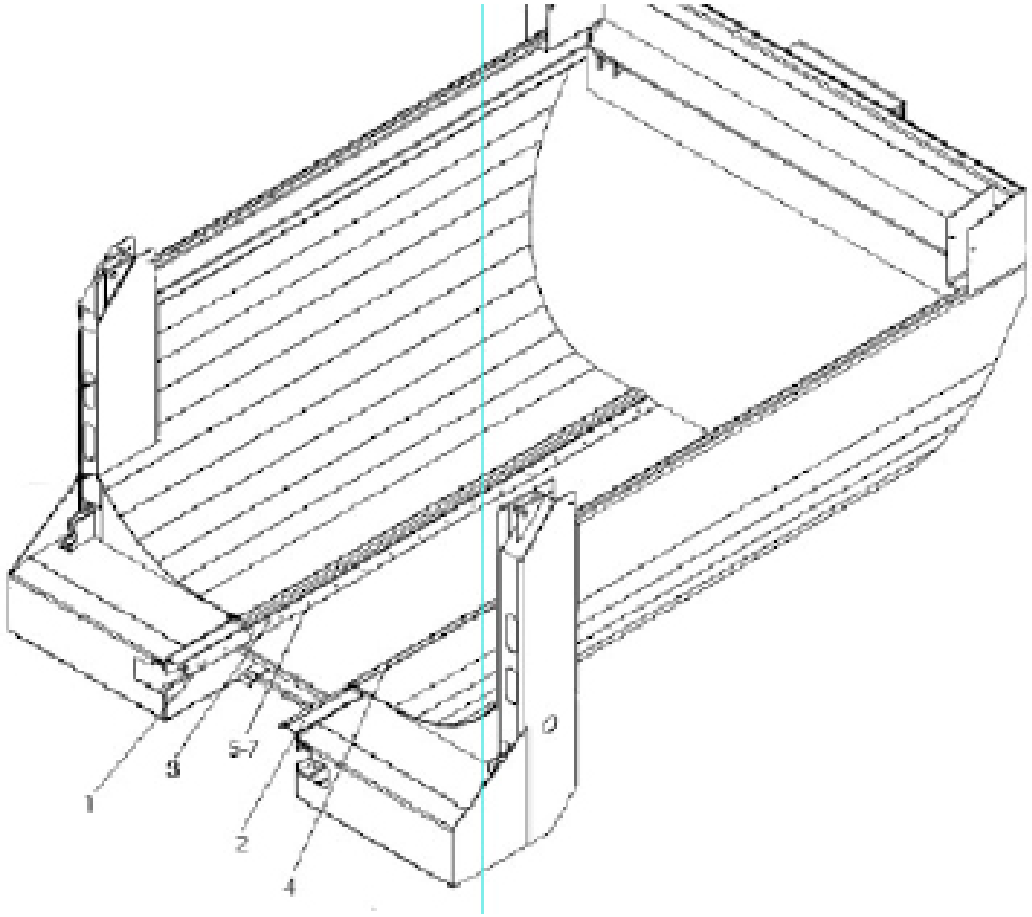

Conveyor
Chain Shield - #4 BOC Cont.

ITEM	PART NO.			DESCRIPTION	QTY
	CS	304 SS	201 SS		
1	88742-AA	97601-AA	310061-AA	Shield Transition #4 LH	1
2	88742-AB	97601-AB	310061-AA	Shield Transition #4 RH	1
3	300365-AA	98825-AA	310057-AA	Chain Shield - Assy #4 LH 10	1
	300365-AC	98825-AC	310057-AC	Chain Shield - Assy #4 LH 11	1
	300365-AE	98825-AE	310057-AE	Chain Shield - Assy #4 LH 12	1
	300365-AG	98825-AG	310057-AG	Chain Shield - Assy #4 LH 13	1
	300365-AI	98825-AI	310057-AI	Chain Shield - Assy #4 LH 14	1
	300365-AK	98825-AK	310057-AK	Chain Shield - Assy #4 LH 15	1
4	300365-AB	98825-AB	310057-AB	Chain Shield - Assy #4 RH 10	1
	300365-AD	98825-AD	310057-AD	Chain Shield - Assy #4 RH 11	1
	300365-AF	98825-AF	310057-AF	Chain Shield - Assy #4 RH 12	1
	300365-AH	98825-AH	310057-AH	Chain Shield - Assy #4 RH 13	1
	300365-AJ	98825-AJ	310057-AJ	Chain Shield - Assy #4 RH 14	1
	300365-AL	98825-AL	310057-AL	Chain Shield - Assy #4 RH 15	1
5	20624	56258	56258	Screw – Truss Head 1/4 x 1/2	AR
6	88931	88931	88931	Nut – Tee 1/4 x 1/4	AR
7	300367	300367	300367	Belt - Sealer Chain Shield Type III	AR

AR - As Required

Conveyor

Chain Shield - #3 Bar Chain

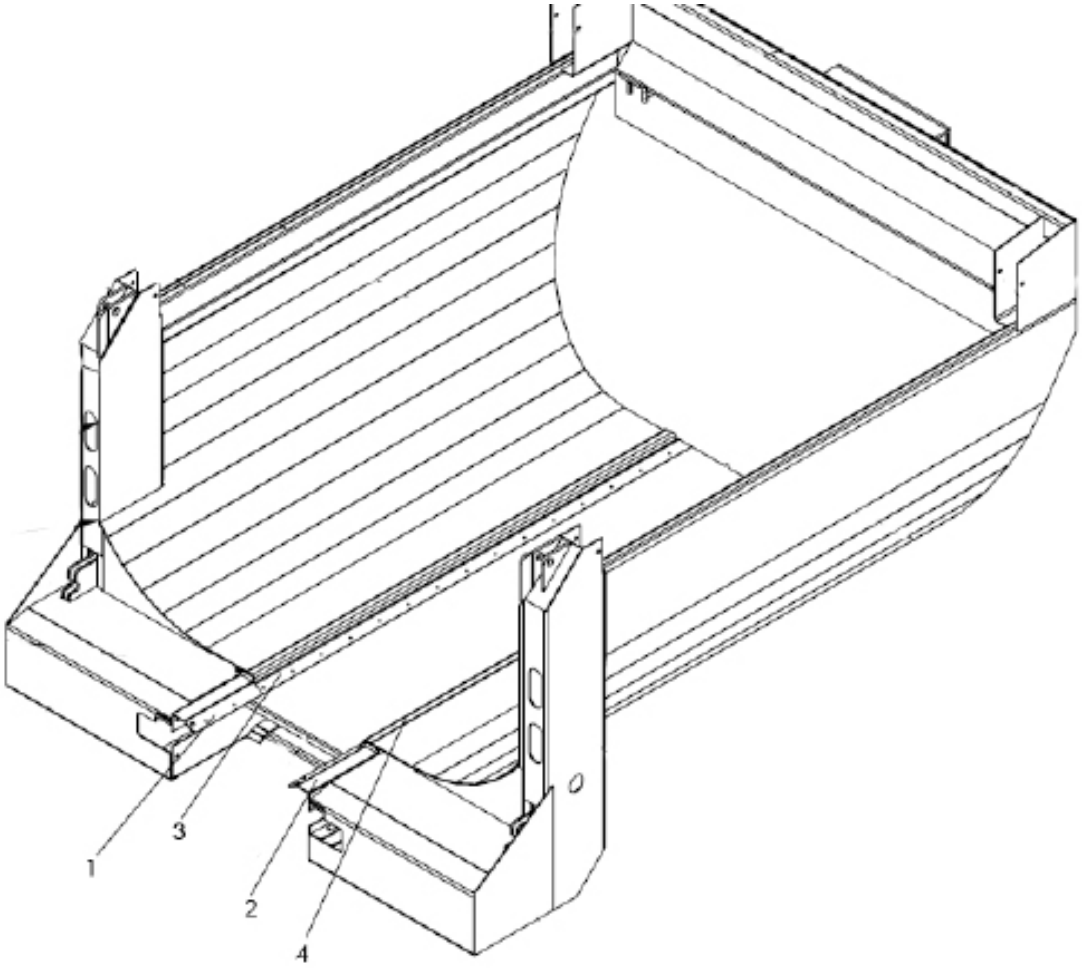

Conveyor

Chain Shield - #3 Bar Chain Cont.

ITEM	PART NO.			DESCRIPTION	QTY
	CS	304 SS	201 SS		
1	97024-AA	97584-AA	309447-AA	Shield Transition #3 LH	1
2	97024-AB	97584-AB	309447-AB	Shield Transition #3 RH	1
3	300353-AA	98826-AA	309448-AA	Chain Shield - Assy #3 10	1
	300353-AB	98826-AB	309448-AB	Chain Shield - Assy #3 11	1
	300353-AC	98826-AC	309448-AC	Chain Shield - Assy #3 12	1
	300353-AD	98826-AD	309448-AD	Chain Shield - Assy #3 13	1
	300353-AE	98826-AE	309448-AE	Chain Shield - Assy #3 14	1
	300353-AF	98826-AF	309448-AF	Chain Shield - Assy #3 15	1
4	300353-AA	98826-AA	309448-AA	Chain Shield - Assy #3 10	1
	300353-AB	98826-AB	309448-AB	Chain Shield - Assy #3 11	1
	300353-AC	98826-AC	309448-AC	Chain Shield - Assy #3 12	1
	300353-AD	98826-AD	309448-AD	Chain Shield - Assy #3 13	1
	300353-AE	98826-AE	309448-AE	Chain Shield - Assy #3 14	1
	300353-AF	98826-AF	309448-AF	Chain Shield - Assy #3 15	1

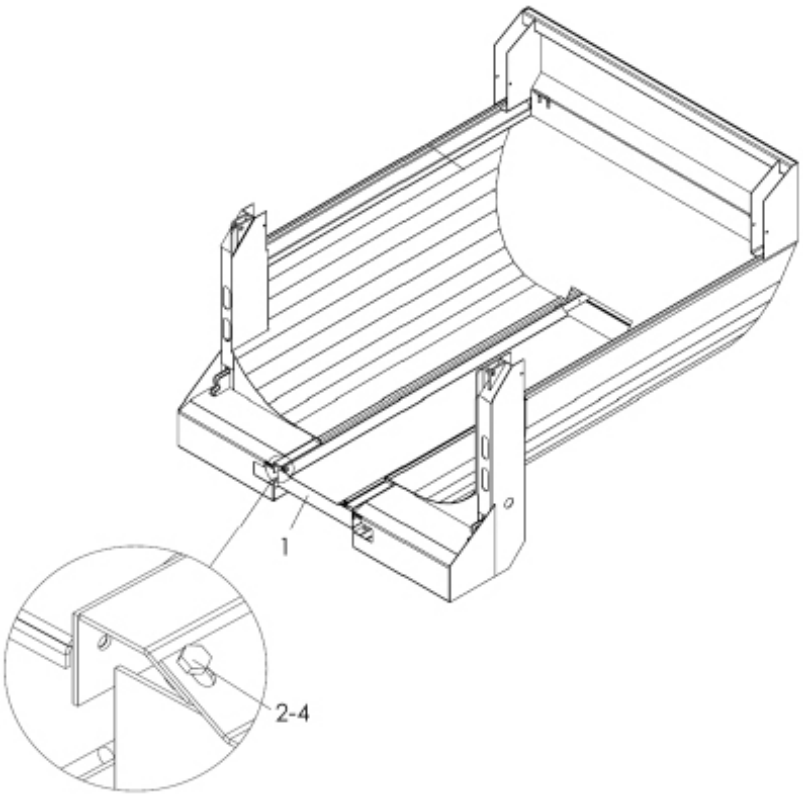

ITEM	PART NO.	DESCRIPTION	QTY
1	300558-AA	Cover – Wldmt Conveyor 10	1
	300558-AB	Cover – Wldmt Conveyor 11	1
	300558-AC	Cover – Wldmt Conveyor 12	1
	300558-AD	Cover – Wldmt Conveyor 13	1
	300558-AE	Cover – Wldmt Conveyor 14	1
	300558-AF	Cover – Wldmt Conveyor 15	1
	300558-AG	Cover – Wldmt Conveyor 16	1
2	20128-X1	Cap Screw – 1/2 x 1 G8	2
3	20714	Washer – Lock 1/2	2
4	89643	Nut – Hex 1/2 G8	2

* - Not Shown

Conveyor

Conveyor Chain Oiler

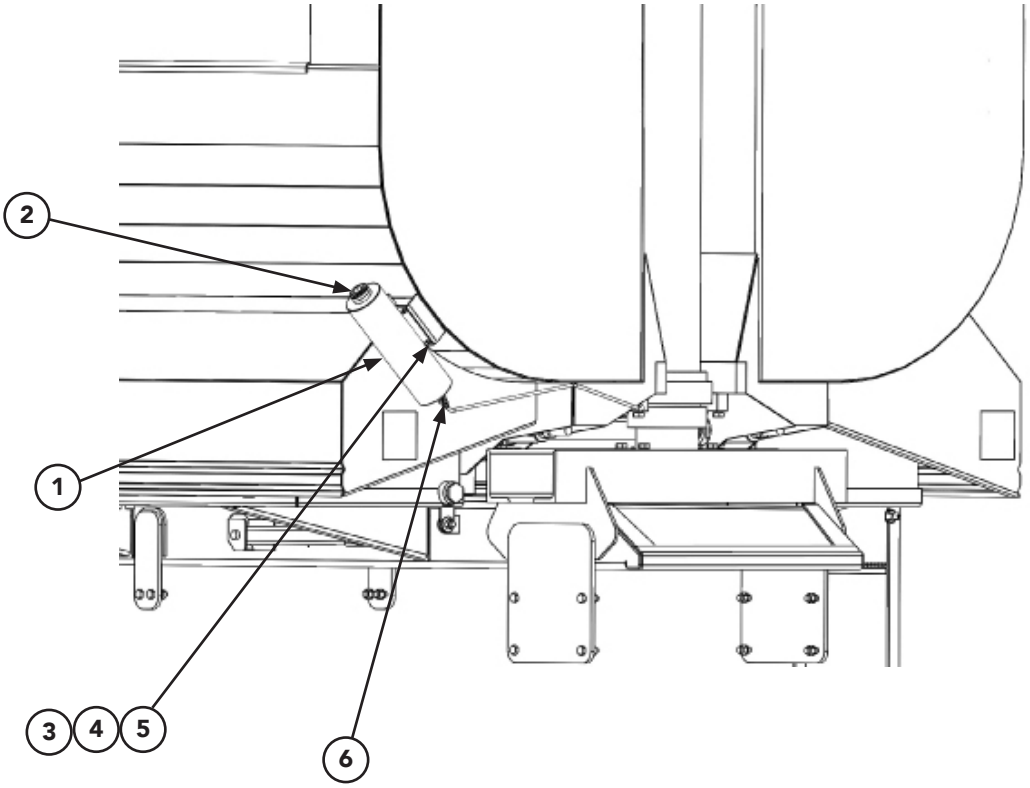

ITEM	PART NO.		DESCRIPTION	QTY
	CS	SS		
1	1572	1572	Tank – Wldmt Oiler	1
2	21980	21980	Cap – Vented	1
3	20003	36393	Cap Screw – 1/4 x 3/4	4
4	20710	36418	Washer – Lock 1/4	4
5	20642	36412	Nut – Hex 1/4	4
6	21982	21982	Valve – Shut-Off	1
7	*89967	89967	Fitting – Elbow 90°	1
8	*89968	89968	Fitting – Tee	1
9	*89969	89969	Fitting – Bulkhead	1
10	* 6081	6081	Tube – Copper, III	AR

* - Not Shown AR - As Required

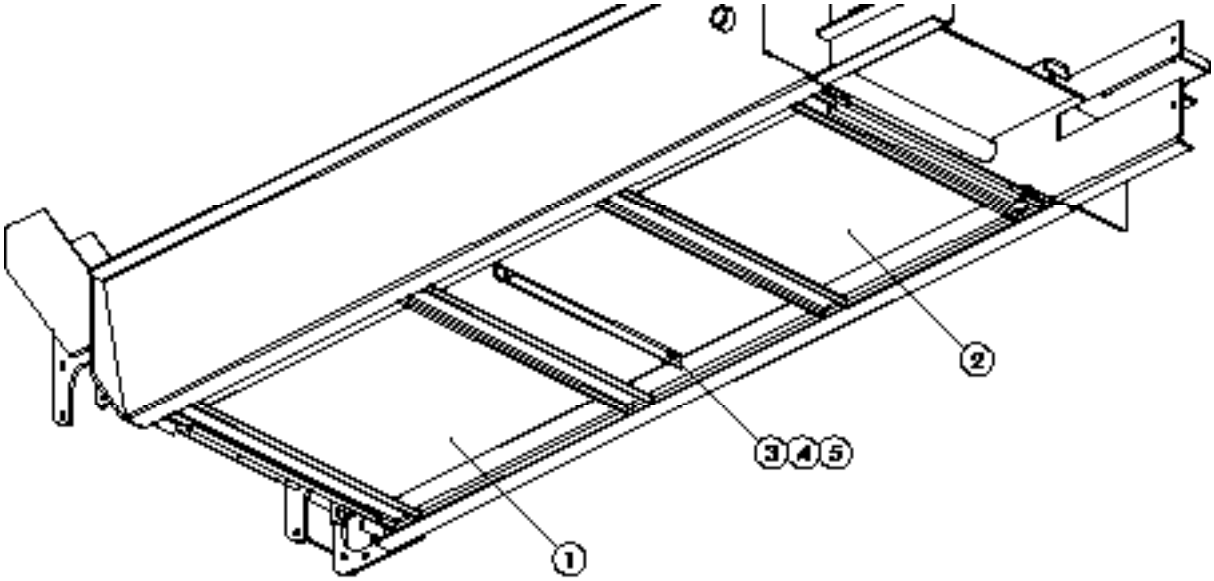

ITEM	PART NO.		DESCRIPTION	QTY
	CS	SS 304		
1	88823-AG	300310-AG	Pan – Under Conveyor Base	1
2	88823-AA	300310-AA	Pan – Under Conveyor 10	1
	88823-AB	300310-AB	Pan – Under Conveyor 11	1
	88823-AC	300310-AC	Pan – Under Conveyor 12	1
	88823-AD	300310-AD	Pan – Under Conveyor 13	1
	88823-AE	300310-AE	Pan – Under Conveyor 14	1
	88823-AF	300310-AF	Pan – Under Conveyor 15	1
	--	300310-AH	Pan – Under Conveyor 16	1
3	20067	36398	Cap Screw – 3/8 x 1	2
4	20712	36420	Washer – Lock 3/8	2
5	20644	36414	Nut – Hex 3/8	2

Rear Spinner

Spinner Frame & Patch Pan

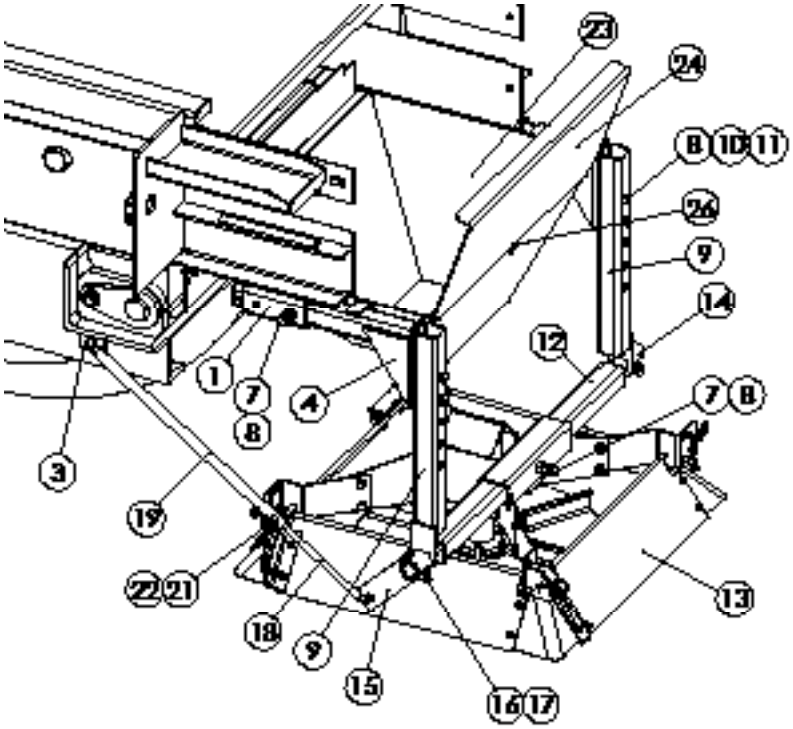

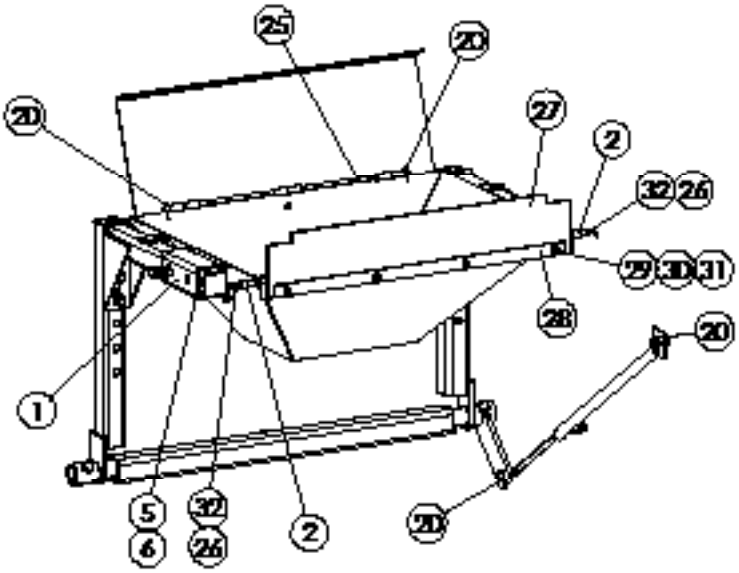

ITEM	PART NO.			DESCRIPTION	QTY
	CS	304 SS	201 SS		
1	88951	97537	97537	Tube – Wldmt Mount Rear	2
2	88953	97539	97539	Pipe – 1/4 x 1-1/4	2
3	88954	97540	97540	Plate – Adjusting Rear	1
4	88955	88955	88955	Frame – Wldmt Horizontal	2

* - Not Shown

Rear Spinner

Spinner Frame & Patch Pan Cont.

ITEM	PART NO.			DESCRIPTION	QTY
5	6123	88229	88229	Pin – Clevis 3/8 x 2-1/4	2
6	40576	36429	36429	Pin – Hair	2
7	20129	36539	36539	Cap Screw 1/2 x 1-1/2	AR
8	20646	36416	36416	Nut – Hex 1/2	AR
9	88959	88959	88959	Frame – Wldmt Vertical	2
10	20135	36297	36297	Cap Screw – 1/2 x 3	4
11	20714	36422	36422	Washer – Lock 1/2	4
12	88962	88962	88962	Hanger – Wldmt Horizontal	1
13	89874-AA	97541-AA	310069-AA	Spinner – Assy Poly w/ Baffles	1
	89874-AB	97541-AB	310069-AB	Spinner – Assy Steel w/ Baffles	1
	* 89980-AA	97685-AA	310070-AA	Spinner – Assy Poly w/o Baffles	1
	* 89980-AB	97685-AB	310070-AB	Spinner – Assy Steel w/o Baffles	1
14	88966-AB	88966-AB	88966-AB	Pipe – Retainer Hanger	1
15	88965	88965	88965	Retainer – Wldmt Hanger	1
16	20133	42454	42454	Cap Screw – 1/2 x 2-1/4	2
17	20680	39016	39016	Nut – Lock 1/2	2
18	88971	88971	88971	Rod – Adjusting Slide	1
19	88968	88968	88968	Rod – Wldmt Adjusting	1
20	20817	36427	36427	Pin – Cotter 1/8 x 1	4
21	20068	36399	36399	Cap Screw – 3/8 x 1-1/4	1
22	20644	36414	36414	Nut – Hex 3/8	1
23	88982	97558	97558	Hopper – Wldmt, Chain Conveyor	1
24	88987	97564	309455	Cover – Wldmt Hopper	1
25	88989	88989	88989	Rod – Hinge Hopper Cover	1
26	40562	41779	41779	Pin – Hair	3
27	88994	88994	88994	Belt – Wiper Rear Outer	1
28	88652	88652	309420	Retainer – Sealer Feedgate	1
29	20005	36395	36395	Cap Screw – 1/4 x 1	4
30	20710	36418	36418	Washer- Lock 1/4	4
31	20642	36412	36412	Nut – Hex 1/4	4
32	17770	76821	76821	Pin – Clevis 5/16 x 3-1/2	2

* - Not Shown

Rear Spinner

Spinner Assembly - w/ Baffles

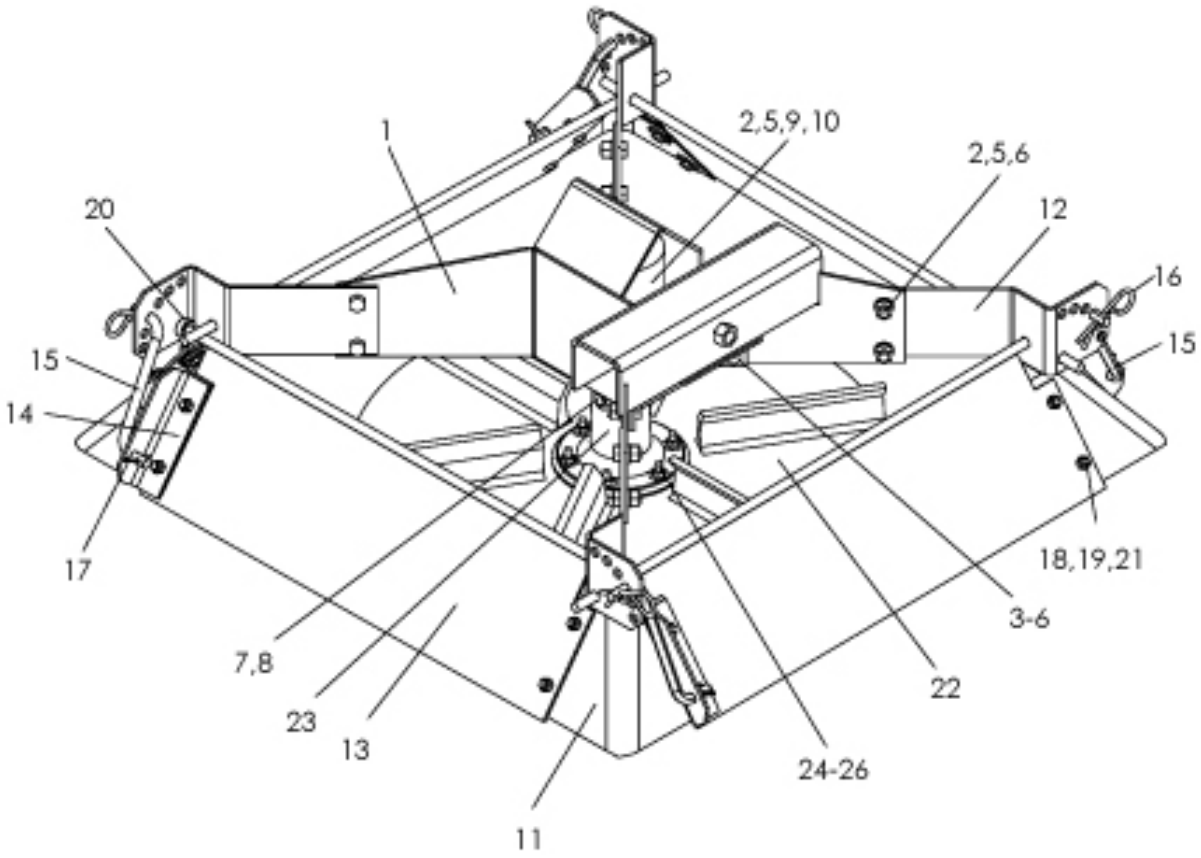

ITEM	PART NO.			DESCRIPTION	QTY
	CS	304 SS	201 SS		
	89874-AA	97541-AA	310069-AA	Spinner – Assy Poly with Baffles	
	89874-AB	97541-AB	310069-AB	Spinner – Assy Steel with Baffles	
	87757	87757	87757	Disc - Assy Spinner Steel, Includes 22,23,27-30	
	88396	88396	88396	Disc - Assy Spinner Poly, Includes 22-26	
1	89876	97542	310071	Frame – Wldmt Spinner	1
2	20065	36293	36293	Cap Screw – 3/8 x 3/4	12
3	20067	36398	36398	Cap Screw – 3/8 x 1	2
4	20693	36425	36425	Washer – Flat 3/8	2
5	20712	36420	36420	Washer – Lock 3/8	14
6	20644	36414	36414	Nut – Hex 3/8	10
7	6123	88229	88229	Pin – Clevis 3/8 x 2-1/4	1
8	20817	36427	36427	Pin – Cotter 1/8 x 1	1

* - Not Shown Items 28-30 used to secure Item 27 to Item 22

Rear Spinner

Spinner Assembly - w/ Baffles Cont.

ITEM		PART NO.	DESCRIPTION	QTY
9	89878	97548	Mount – Wldmt Motor	1
10	58806	58806	Motor – Hydraulic	1
11	87801	87801	Deflector – Belt	4
12	89886	97550	Support – Baffle	4
13	89877	97551	Baffle – Wldmt	4
14	89981	97554	Angle – Mounting	4
15	89984	97555	Rod – Control	4
16	40576	36429	Pin – Hair	4
17	20821	76884	Pin – Cotter	4
18	20003	36393	Cap Screw – 1/4 x 3/4	16
19	20676	42034	Nut - Lock 1/4	16
20	21011	21011	collar - Set 3/8	4
21	21423	21423-X1	Washer - 1/4 Special	8
22	34853	34856	Spinner - Urethane, Poly Only	1
	*9098	9098	Disc - Distributor, Steel Only	1
23	88002	88002	Hub - Spinner Direct Drive	1
24	21423	21423	Washer - 1/4 Special	6
25	20007	20007	Cap Screw - 1/4-20 x 1-1/2	6
26	20676	20676	Nut - Lock 1/4-20	6
27	*4731	4731	Fin - Formed	6
28	*20003	20003	Cap Screw - 1/4-20 x 3/4	12
29	*20676	20676	Nut - Lock 1/4-20	18
30	*20004	20004	Cap Screw - 1/4 x 7/8	6

* - Not Shown Items 28-30 used to secure Item 27 to Item 22

Rear Spinner - Type I & III
Spinner Assembly - w/o Baffles

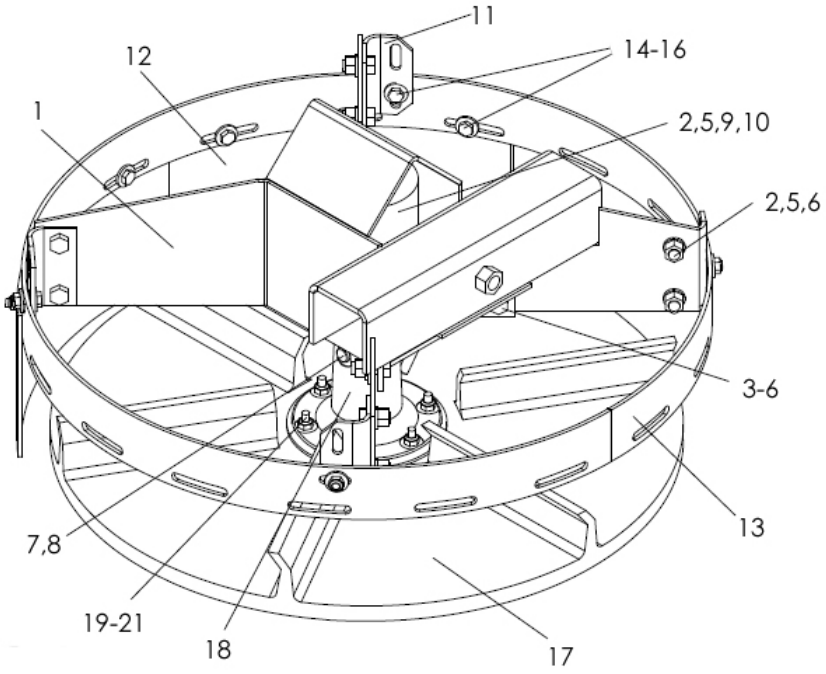

ITEM	PART NO.			DESCRIPTION	QTY
	CS	304 SS	304 SS		
	89980-AA	97685-AA	310070-AA	Spinner – Assy Poly without Baffles	
	89980-AB	97685-AB	310070-AB	Spinner - Assy Steel without Baffles	
	87757	87757	87757	Disc - Assy Spinner Steel, Includes 17,18,22-25	
	88396	88396	88396	Disc - Assy Spinner Poly, Includes 17-21	
1	89876	97542	310071	Frame – Wldmt Spinner	1
2	20065	36293	36293	Cap Screw – 3/8 x 3/4	12
3	20067	36398	36398	Cap Screw – 3/8 x 1	2
4	20693	36425	36425	Washer – Flat 3/8	2
5	20712	36420	36420	Washer – Lock 3/8	14
6	20644	36414	36414	Nut – Hex 3/8	10
7	6123	88229	88229	Pin – Clevis 3/8 x 2-1/4	1
8	20817	36427	36427	Pin – Cotter 1/8 x 1	1
9	89878	97548	310073	Mount – Wldmt Motor	1

* - Not Shown Items 23-25 used to secure item 22 to item 17

Rear Spinner - Type I & III

Spinner Assembly - w/o Baffles Cont.

ITEM	PART NO.			DESCRIPTION	QTY
10	58806	58806	58806	Motor – Hydraulic	1
11	89987	97687	310096	Angle – Ring Mount	4
12	89981	97688	310081	Plate – Baffle	1
13	89987	97689	310074	Ring – Wldmt Baffle Mount	1
14	20003	36393	36393	Cap Screw – 1/4 x 3/4	10
15	20691	36423	36423	Washer - Flat 1/4	14
16	20676	42034	42034	Nut - Lock 1/4	10
17	34853	34853	34853	Spinner - Urethane, Poly Only	1
	*9098	9098	9098	Disc - Distributor, Steel Only	1
18	88002	88002	88002	Hub – Spinner Direct Drive	1
19	21423	21423	21423	Washer - 1/4 Special	6
20	20007	20007	20007	Cap Screw - 1/4-20 x 1-1/2	6
21	20676	20676	20676	Nut - Lock 1/4-20	6
22	*4731	4731	4731	Fin - Formed	6
23	*20003	20003	20003	Cap Screw - 1/4-20 x 3/4	12
24	*20676	20676	20676	Nut - Lock 1/4-20	18
25	*20004	20004	20004	Cap Screw - 1/4 x 7/8	6

* - Not Shown Items 23-25 used to secure item 22 to item 17

This page is intentionally left blank.

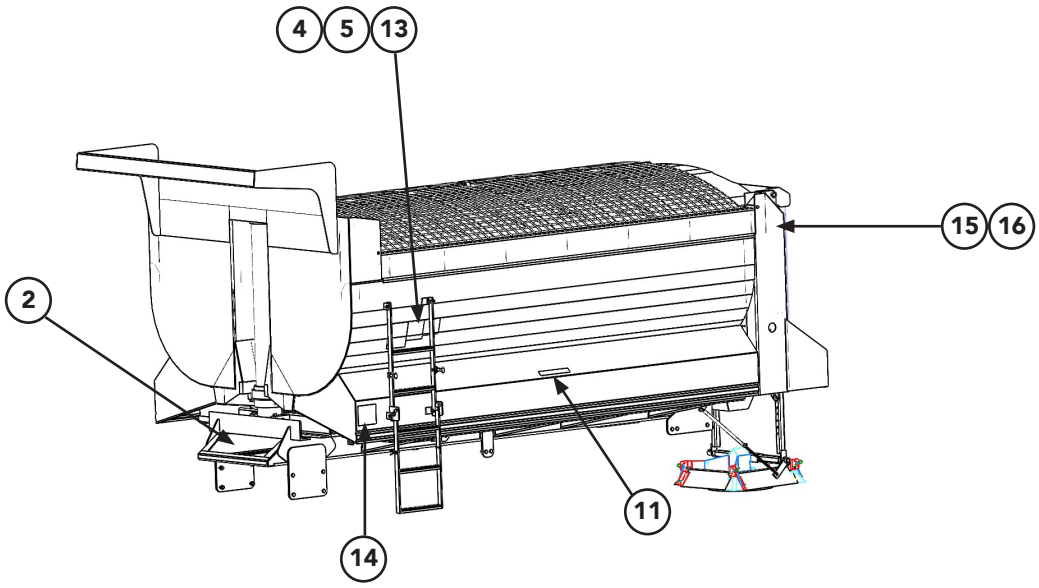
4
5
13
15
16
2
11
14

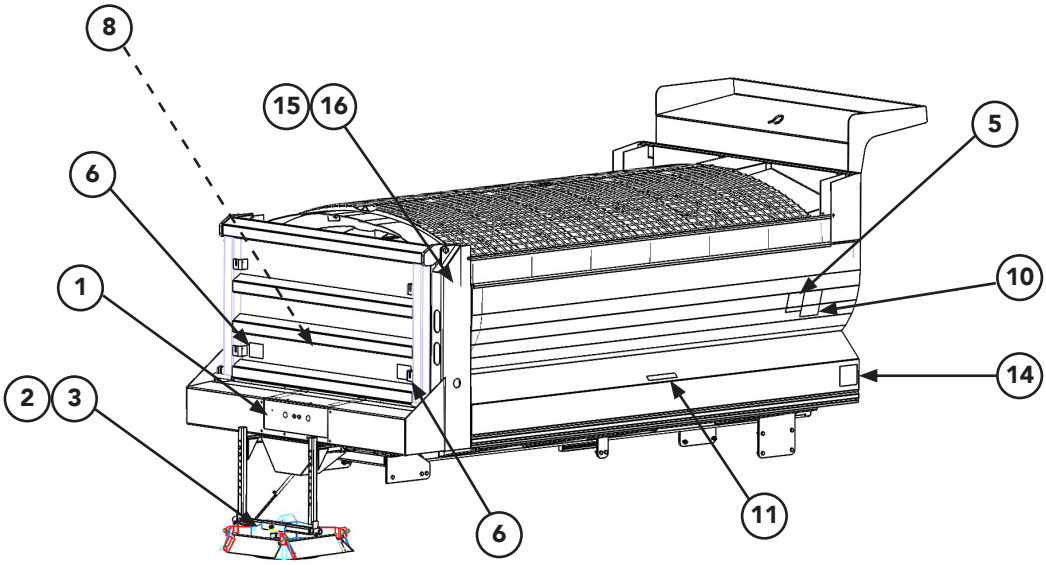
8
15
16
6
1
2
3
5
10
14
11
6

ITEM	PART NO.	DESCRIPTION	QTY
1	368	Decal – Danger Flying Material Hazard	1
2	*39017	Decal – No Step	1
3	55630	Decal – Warning Falling Hazard	1
4	*321	Decal – Caution Hazardous Material	1
5	364	Decal – Danger Moving Part Hazard, Conveyor	2
6	366	Decal – Warning Moving Part Hazard	2
7	*21476	Decal – Notice Conveyor Chain Life	1
8	96706	Decal – Scale Rear Feedgate	1
9		NOT USED	
10	39138	Decal – Warning High Pressure Hazard	1
11	39200	Decal – Warning Slipping Hazard	2
12		NOT USED	
13	150034	Decal – Caution Operation & Maintenance	1
14	96712	Decal – Danger Crushing Hazard	2
15	88691 307179	Decal – Hi-Way XT3 Black Decal - Hi-Way XT3 White	2
16	39870 90639	Decal - Hi-Way Large Black Decal - Hi-Way Large White	2
17	* 96704	Decal – Danger Crushing Hazard, On Truck Frame Rails	2
18	* 96715	Decal – Caution Raised Body, In Truck Cab	1
19	*96716	Decal – Caution Operation Safety, In Truck Cab	1

* - Not Shown

Pre-Wet

Reservoir - Fender Mount

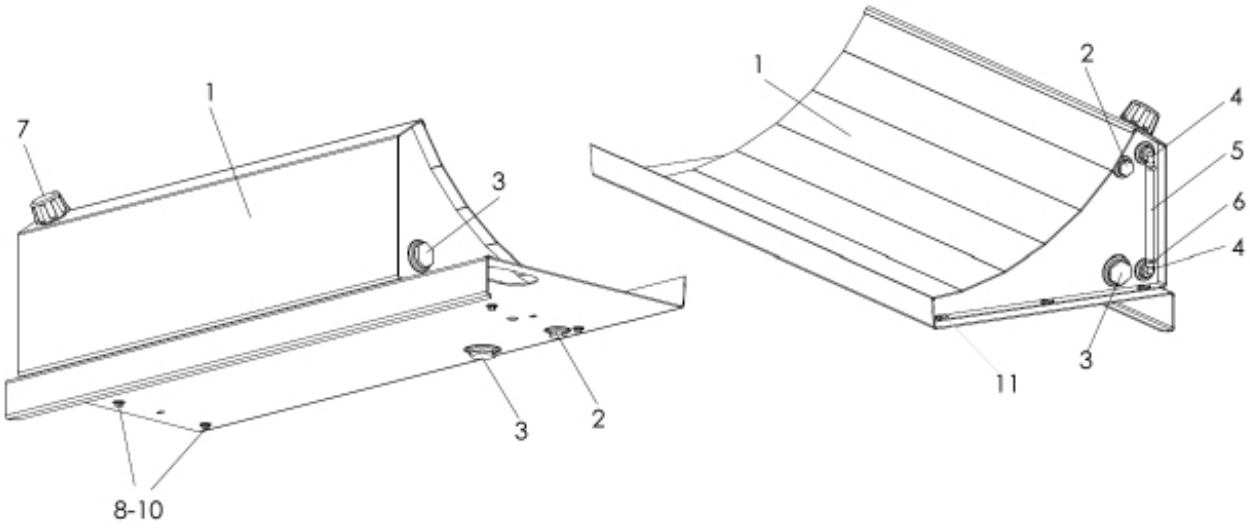

ITEM	PART NO.	DESCRIPTION	QTY
	300479-AA	Tank – Assy Fender 35 Gal. LH, Includes 1-7	
	300479-AB	Tank – Assy Fender 35 Gal. RH, Includes 1-7	
	300479-AC	Tank – Assy Fender 65 Gal. LH, Includes 1-7	
	300479-AD	Tank – Assy Fender 65 Gal. RH, Includes 1-7	
	300479-AE	Tank – Assy Fender 95 Gal. LH, Includes 1-7	
	300479-AF	Tank – Assy Fender 95 Gal. RH, Includes 1-7	
1	300481-AA	Tank – Wldmt Fender 35 Gal. LH	1
	300481-AB	Tank – Wldmt Fender 35 Gal. RH	1
	300481-AC	Tank – Wldmt Fender 65 Gal. LH	1
	300481-AD	Tank – Wldmt Fender 65 Gal. RH	1
	300481-AE	Tank – Wldmt Fender 95 Gal. LH	1
	300481-AF	Tank – Wldmt Fender 95 Gal. RH	1
2	98207	Plug – Pipe Poly 3/4	2
3	98208	Plug – Pipe Poly 1-1/2	3
4	98209	Fitting – 90° Elbow Poly	2
5	50977	Tube – Flex	1
6	98210	Clamp – Hose 1/2 – 1	2
7	98922	Cap – Filler Breather	1
8	34858	Cap Screw – 3/8 x 1-1/2	6
9	36425	Washer – Flat 3/8	6
10	36420	Washer – Lock 3/8	6
11	36414	Nut - 3/8-16	6
12	*98944	Pad - Pre-Wet Mounting	2

* - Not Shown

This page is intentionally left blank.

Side Discharge Chute

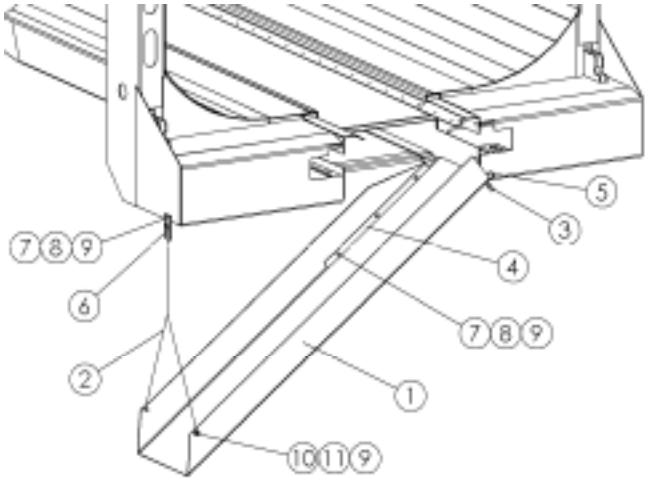

ITEM	PART NO.		DESCRIPTION	QTY
	CS	SS		
1	302208-AC	307308-AC	Chute – Wldmt LH Side Discharge	1
	302208-AD	307308-AD	Chute – Wldmt RH Side Discharge	1
2	304090	304090	Chain – Assy 5/16	1
3	302206	307309	Pin – Discharge Chute	1
4	302205	307310	Strip – Wear	1
5	86878	86878	Pin – Hair 3-3/4 x .178	1
6	302213	307311	Plate – Chain Hook	1
7	20067	36398	Cap Screw – 3/8-16 NC x 1	4
8	20712	36420	Washer – Lock 3/8	4
9	20644	36414	Nut – Hex 3/8	6
10	20068	36399	Cap Screw – 3/8-16 NC x 1-1/4	2
11	20693	36425	Washer – Flat 3/8	2
12	*302207-AA	307313-AA	Hinge - Discharge Chute	2

* - Not Shown

Accessories

Patch Pan

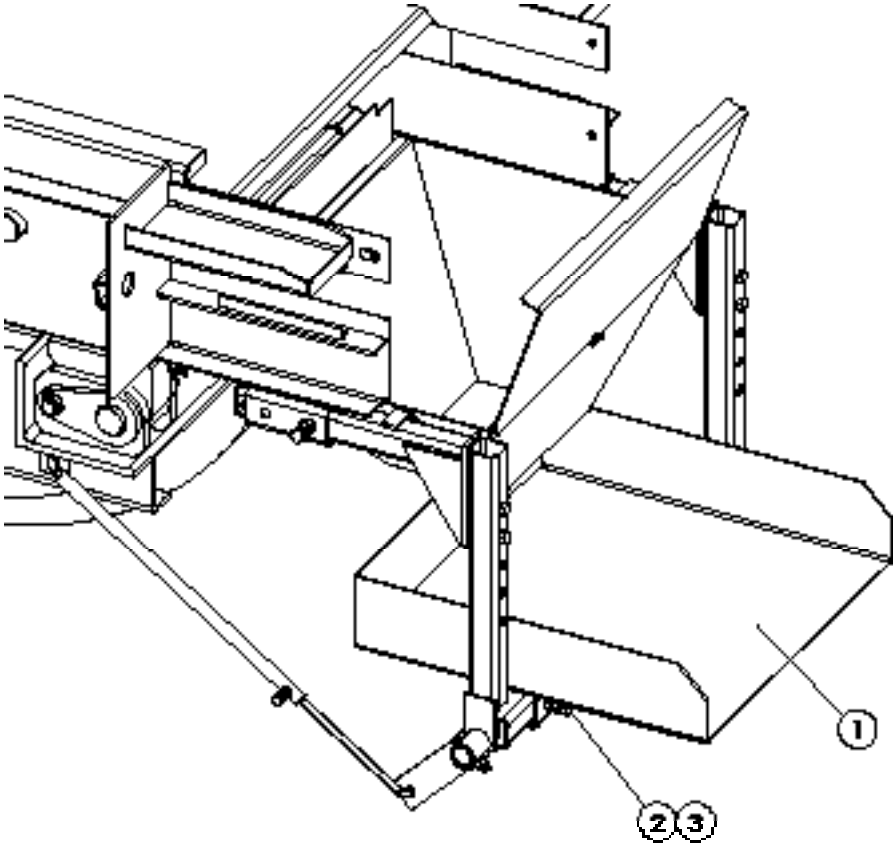

ITEM	PART NO.	DESCRIPTION	QTY
1	88990	Pan – Wldmt Patch	1
2	20129	Cap Screw 1/2 x 1-1/2	2
3	20646	Nut – Hex 1/2	2

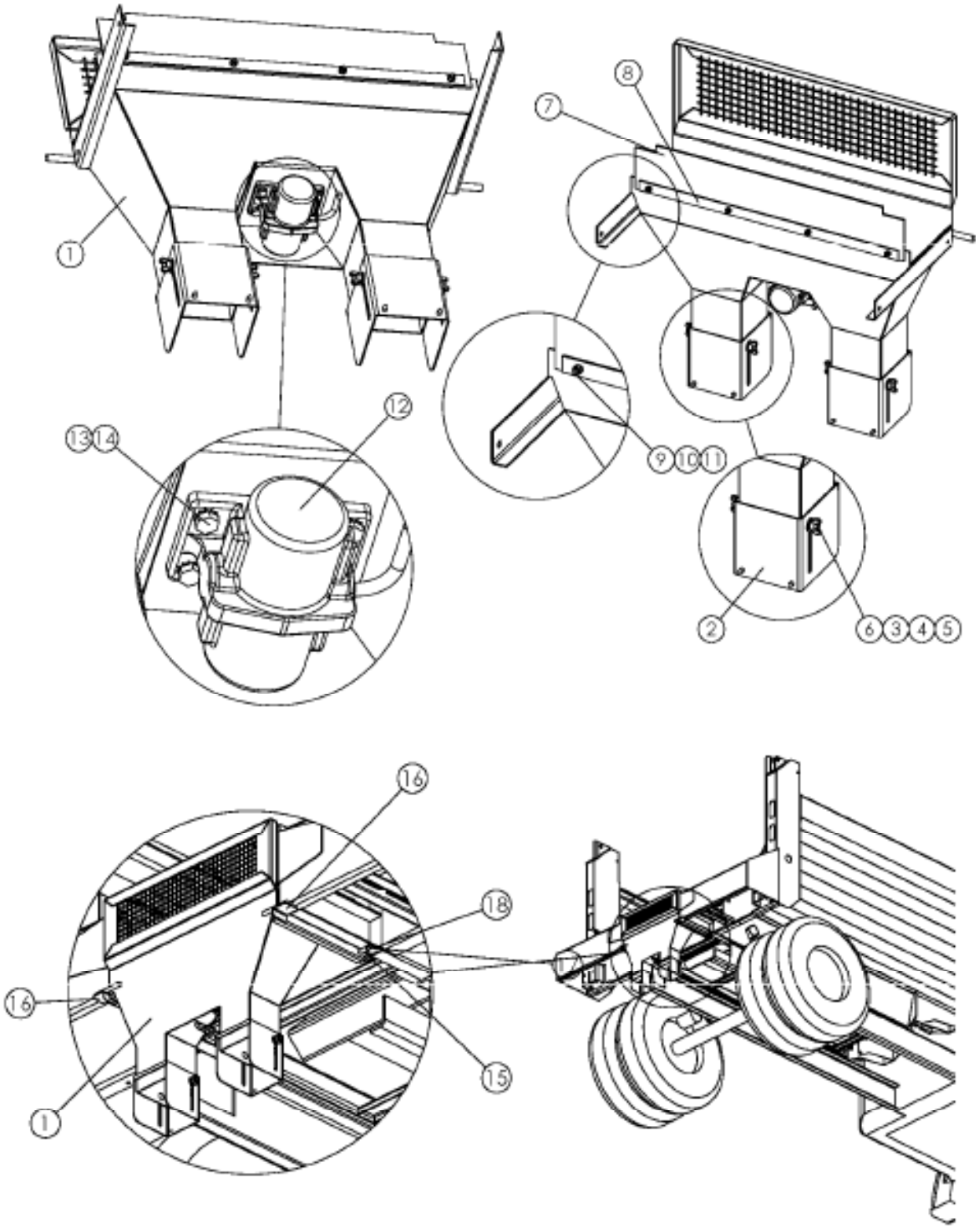
1
8
7
12
13
14
9
10
11
2
6
3
4
5
16
18
16
15
1

Accessories

Sand Bagger Cont.

ITEM	PART NO.	DESCRIPTION	QTY
	306977	Sand Bagger – Assy 304, Includes 1-14	
1	306978	Sand Bagger – Wldmt 304	1
2	306995	Extension – Wldmt 304	2
3	36425	Washer – Flat 3/8 SS	4
4	36420	Washer – Lock 3/8 SS	4
5	20673	Nut – Wing 3/8 SS	4
6	36408	Bolt – Carriage 3/8 x 1 SS	4
7	88994	Belt – Wiper Rear Outer	1
8	88652	Retainer – Sealer Feedgate	1
9	36394	Cap Screw – 1/4 x 7/8 SS	4
10	36418	Washer – Lock 1/4 SS	4
11	36412	Nut – Hex 1/4 SS	4
12	306993	Vibrator – DC-40	1
13	22793	Washer – Shakeproof 3/8	4
14	36398	Cap Screw – 3/8 x 1 SS	4
15	97539	Pipe – 1/4 x 1-1/4 304	2
16	306983	Angle – Support 304	2
17	79654	Pin – Clevis	2
18	41779	Pin - Hair	2

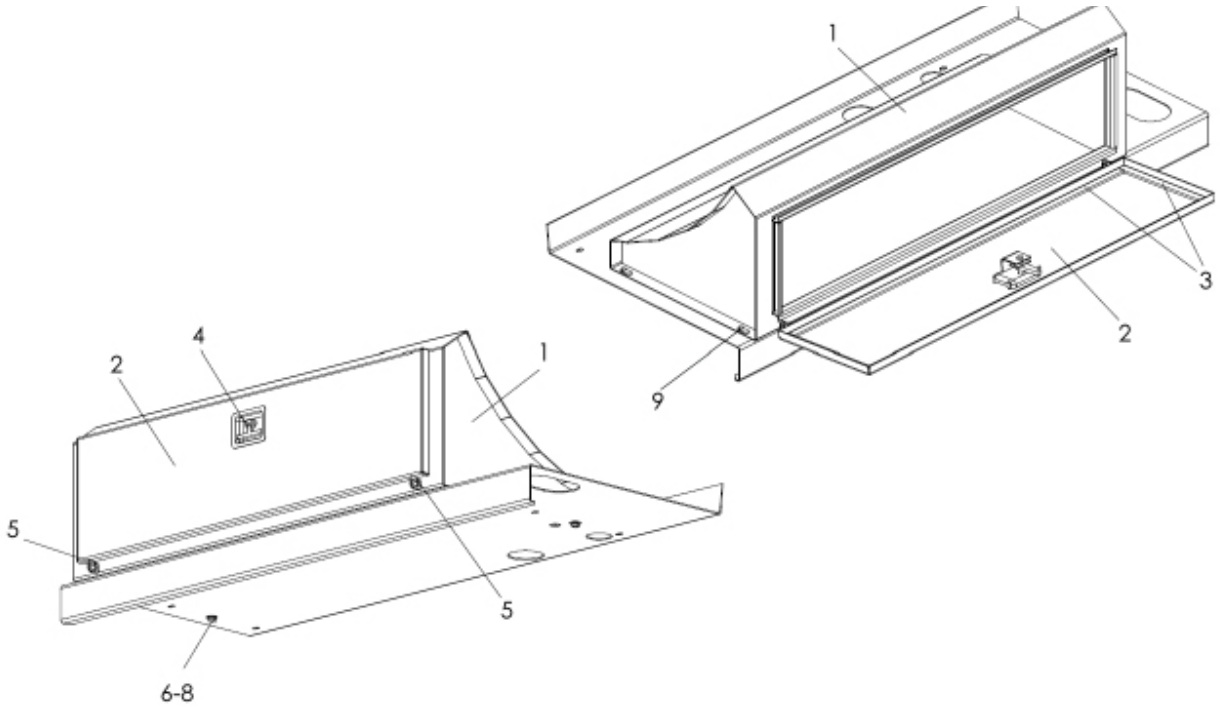

ITEM	PART NO.		DESCRIPTION	QTY
	CS	SS		
1	98881-AA	98882-AA	Toolbox – Wldmt 47"	1
	98881-AB	98882-AB	Toolbox – Wldmt 85"	1
	98881-AC	98882-AC	Toolbox – Wldmt 122"	1
	--	98882-AD	Toolbox - Wldmt 85" LH Door	1
	--	98882-AE	Toolbox - Wldmt 122", 72" Door RH Rear	1
	--	98882-AH	Toolbox - Wldmt Fender Mounted 27"	1
2	98892-AA	98892-AC	Lid – Wldmt Toolbox, 47" & 122"	AR
	98892-AB	98892-AD	Lid – Wldmt Toolbox, 85"	1
	--	98892-AF	Lid - Wldmt Toolbox 27"	1
3	84280	84280	Strip – Rubber 1/4 x 3/4 per foot	AR
4	98896-AA	98896-AB	Latch – Paddle Toolbox	AR
5	20810	76822	Pin – Cotter 3/32 x 1/2	AR
6	20069	34858	Cap Screw – 3/8 x 1-1/2	4
7	20693	36425	Washer – Flat 3/8	4
8	20712	36420	Washer – Lock 3/8	4
9	20644	36414	Nut - 3/8-16	4
10	*98944	98944	Pad - Pre-Wet Mounting	2

AR - As Required