MODEL XZALT
Parts Manual

UNIT SERIAL NO. _____

MANUAL NUMBER: 308216-AB-G

EFFECTIVE 05/2019

1330 76TH AVE SW
CEDAR RAPIDS, IA 52404-7052
PHONE (800) 363-1771 | FAX (319) 286-3350
www.newleader.com

Copyright 2019 Highway Equipment Company, Inc.
Now doing business as New Leader Manufacturing

Table of Contents

Table of Contents 2
Instructions for Ordering Parts 3
Body 4
- Tarp 4
- Screens 8
- Ladder 9
- Light - Strobe/Beacon 10

Dump Body Mount 11
- Safety Strap 11
- Subframe 12

Truck Chassis Mount 15
- Subframe 15
- Chassis Mounts 16
- Fenders - 100" Wide 17

Conveyor 18
- Conveyor Group 18
- Gearcase 21
- Conveyor Idler 22
- Belt Shields 23

Spinner 25
- Spinner Pivot 25
- Spinner Assembly 26
- Chute Assembly 30
- Spinner Disc 32
- Spinner Flood Light 33

Liquid System 34
- Liquid Pump System 34
- Liquid Pump System - High Volume 37
- Liquid System Hose Group 42
- Liquid System Hose Group - High Volume 43
- Fill/Pump Valve Assy 44
- Fill/Pump Valve Assy - High Volume 45
- 3-Way Valve Assy 46
- Liquid Tank Group 47
- Liquid Tank Hose Group 50

Metering Gate 51
- Metering Gate Assy 51
- Metering Gate Mechanism 52

Electronics System 53
- Enclosure Group 53
- Controller 54
- Control Panel Group 56

Decals 58
Hydraulic System 60
- Hydraulics 60
- Hydraulic Truck Kit 62

Instructions for Ordering Parts

Order from the **AUTHORIZED DEALER** in your area.

1. Always give the pertinent model and serial number.
2. Give part name, part number and the quantity required.
3. Give the correct address to where the parts are to be shipped, and the carrier if there is a preference.

Unless claims for shortages or errors are made immediately upon receipt of goods they will not be considered. Any part returns should be directed through the dealer from which they were purchased.

When broken goods are received, a full description of the damage should be made by the carrier agent on the freight bill. If this description is insisted upon, full damage can always be collected from the transportation company.

No responsibility is assumed for delay or damage to merchandise while in transit. Our responsibility ceases upon delivery of shipment to the transportation company from whom a receipt is received showing that shipment was in good condition when delivered to them, therefore, claims (if any) should be filed with the transportation company and not with New Leader Manufacturing.

If your claims are not being handled (by the transportation company) to your satisfaction, please call our Product Sales & Support Department at New Leader Manufacturing at 888-363-8006 for assistance.

In the parts list the following symbols and abbreviations stand for:

* - Not Shown
AR – As Required
CS – Carbon Steel
SS – Stainless Steel
NS – Not Serviced

The parts listed under the different steel types (CS and 304 SS) are for that type of unit and do not necessarily mean the part is made of that type of steel.

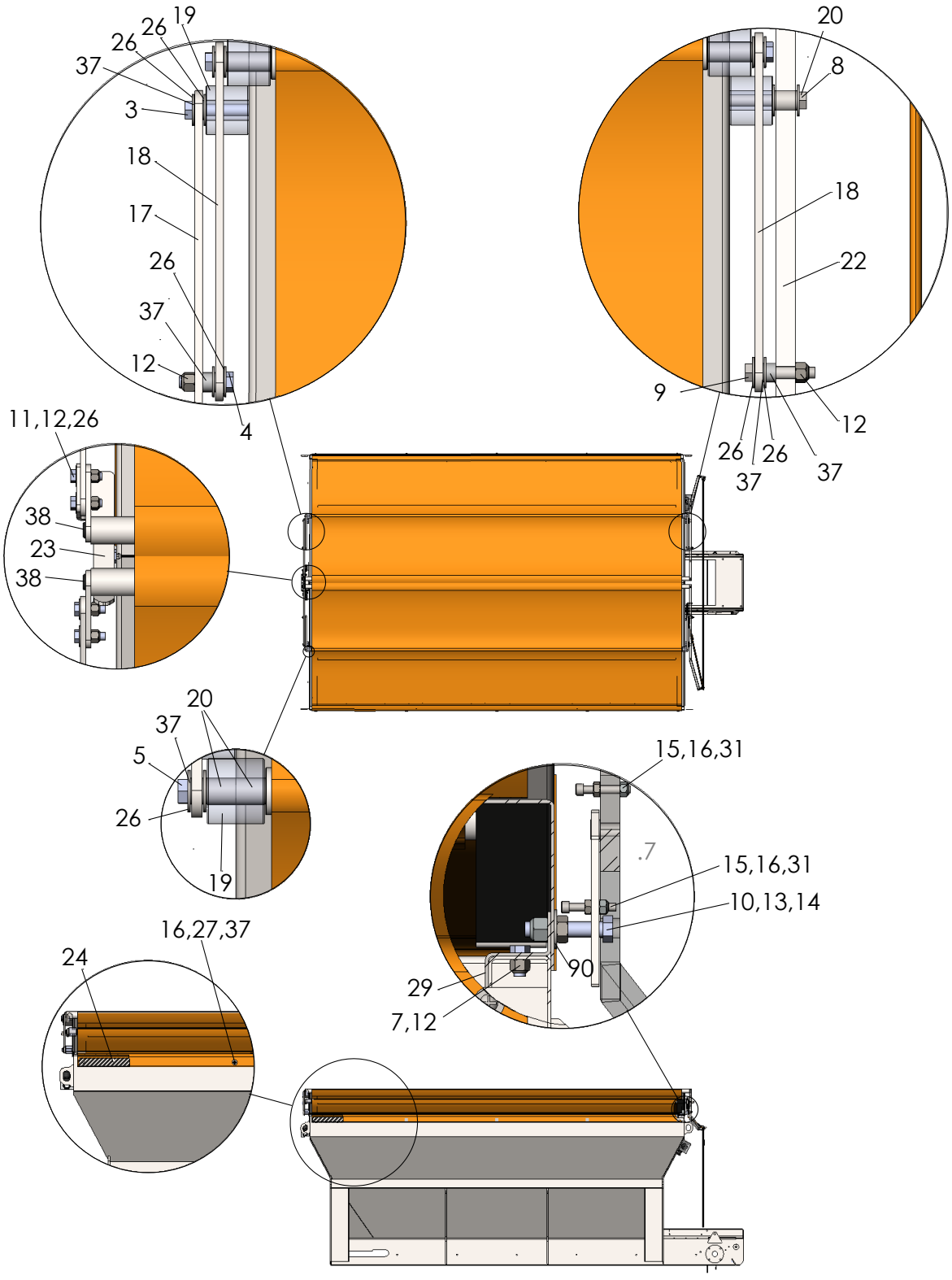
19
26
26
37
3
18
17
26
37
12
4
20
8
18
22
9
12
26
37
26
37
11,12,26
38
23
38
20
37
5
26
19
15,16,31
.7
15,16,31
10,13,14
90
29
7,12
16,27,37
24

Tarp Continued

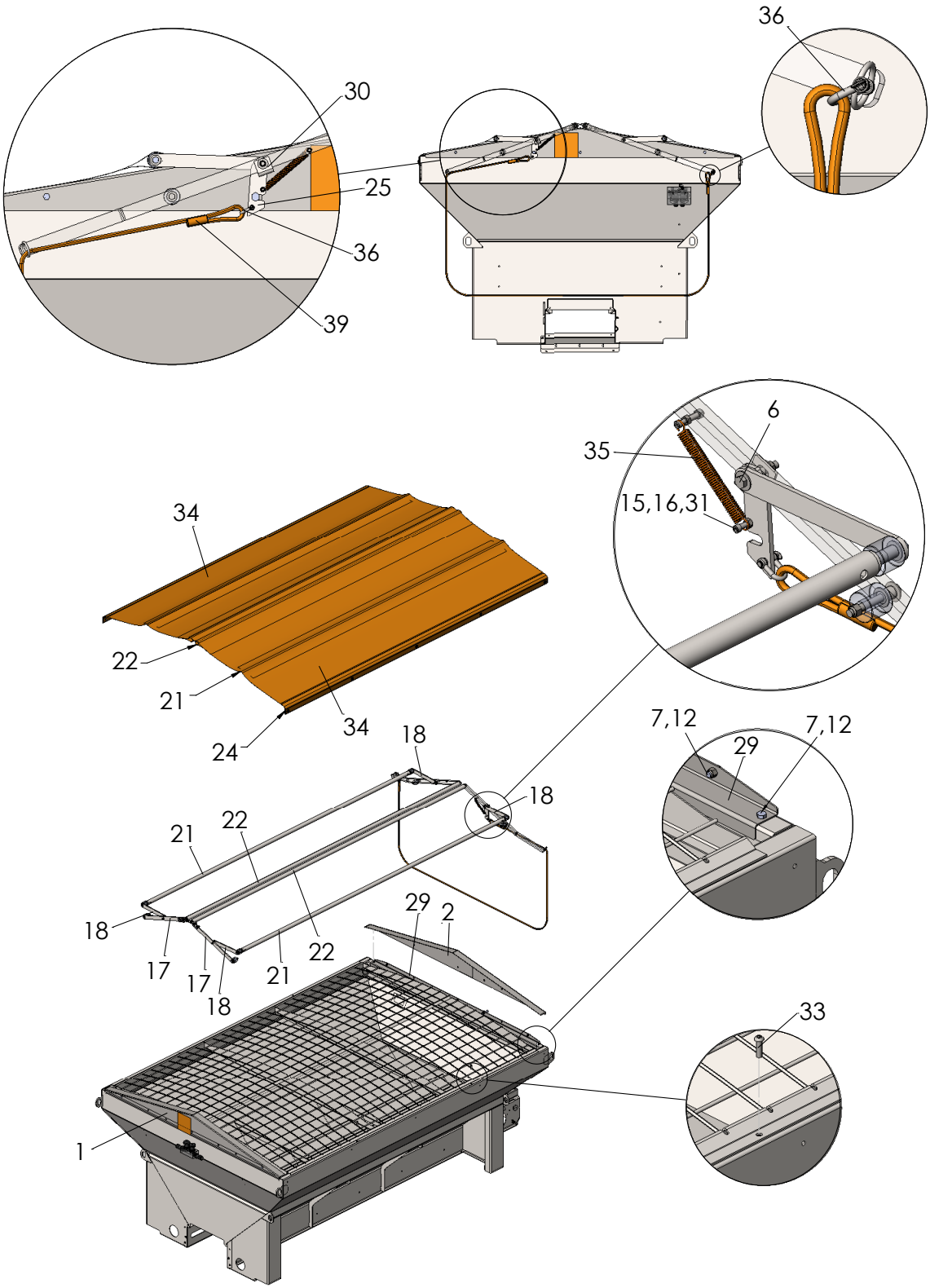

Tarp Continued

ITEM	PART NO.	DESCRIPTION	QTY
1	308407	Plate- Wldmt Tarp End Front 304	1
2	308408	Plate- Wldmt Tarp End Rear 304	1
3	36296	Cap Screw- .38-16NC x 2-3/4 SS	2
4	34858	Cap Screw- 3/8-16NC x 1-1/2 SS	2
5	36400	Cap Screw- 3/8-16NC x 2-1/2 SS	4
6	71828	Cap Screw- 3/8-16NC x 2-1/4 SS	1
7	36293	Cap Screw- 3/8-16NC x 3/4 SS	14
8	71827	Cap Screw- 3/8-16NC x 3 SS	2
9	34859	Cap Screw- 3/8-16NC x 2 SS	1
10	42454	Cap Screw- 1/2-13NC x 2-1/2 SS	1
11	36399	Cap Screw- 3/8-16NC x 1-1/4 SS	4
12	72054	Nut- Lock 3/8-16NC SS	26
13	36416	Nut- Hex 1/2-13NC SS	1
14	39016	Nut- Lock 1/2-13NC SS	1
15	42034	Nut- Lock 1/4-20NC SS	2
16	36412	Nut- Hex 1/4-20NC SS	12
17	309504	Linkage- Tarp Long Galvanized	2
18	309505	Linkage- Tarp Short Galvanized	4
19	308398	Roller- Tarp	8
20	308401	Spacer 304	10
21	309501	Pipe- Tarp Outer 10’ Galvanized	2
	309502	Pipe- Tarp Outer 12’ Galvanized	2
	305903	Pipe- Tarp Outer 14’ Galvanized	2
22	309498	Pipe- Tarp Inner 10’ Galvanized	2
	309499	Pipe- Tarp Inner 12’ Galvanized	2
	309500	Pipe- Tarp Inner 14’ Galvanized	2
23	309506	Lock- Tarp Front Galvanized	1
24	309508	Flat- Anchor Tarp 10’ Galvanized	2
	305909	Flat- Anchor Tarp 12’ Galvanized	2
	305910	Flat- Anchor Tarp 14’ Galvanized	2
25	309507	Lock- Tarp Rear Galvanized	1
26	36425	Washer- Flat 3/8 SS	29
27	21423-X1	Washer- Flat 1/4 Special SS	10
28	36426	Washer- Flat 1/2 SS	1
29	308404	Angle- Mounting Plate End 304	2
30	309497	Stop- Lock Galvanized	1
31	308047	Screw- Sockethead 1/4-20NC x 1-1/2 SS	2
32	42033	Screw- Truss Head 1/4-20NC x 1 SS	10

Tarp Continued

ITEM	PART NO.	DESCRIPTION	QTY
33	71772	Screw- Buttonhead 3/8-16NC x 1-1/4 SS	2
34	308409	Tarp- 10’	2
	308373	Tarp- 12’	2
	308422	Tarp- 14’	2
35	308411	Spring- SS	1
36	308412	D-Shackle- SS	2
37	88050	Spacer	14
38	308406	Plug- Plastic 3/4	4
39	308400	Rope- Tarp	1

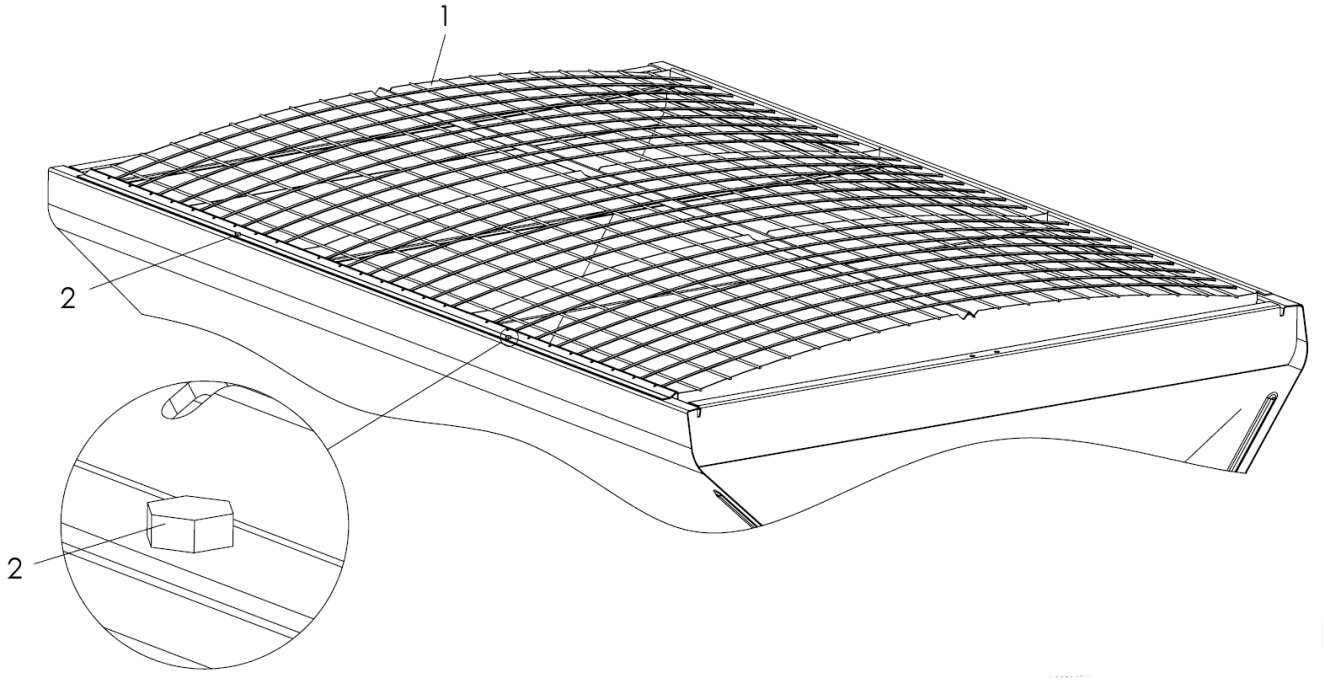

ITEM	PART NO.	DESCRIPTION	QTY
1	308228	Screen- 10’ x 82” Galvanized	1
	308324	Screen- 12’ x 82” Galvanized	1
	308325	Screen- 12’ x 82” Galvanized	1
2	36293	Cap Screw- .375-16NC x .75 SS	AR

AR- As Required

Ladder

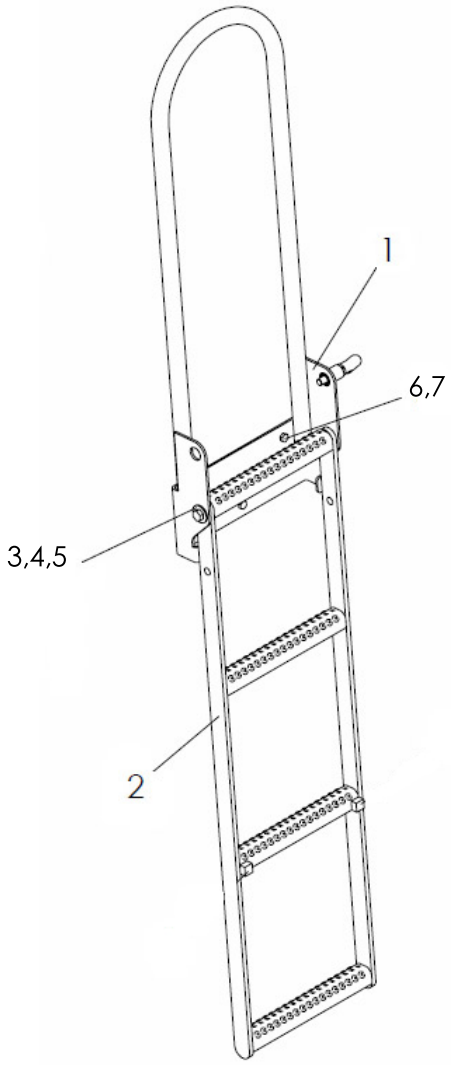

ITEM	PART NO.	DESCRIPTION	QTY
1	308153	Mount- Wldmt Ladder Inspection	1
2	308157	Ladder- Wldmt Inspection	1
3	20695	Washer- Flat .5	2
4	20129	Cap Screw- .5-13NC x 1.5	2
5	20680	Nut- Lock .5-13NC	2
6	20067	Cap Screw- .375-16NC x 1	3
7	20678	Nut- Lock .375-16NC	3

Light - Strobe/Beacon

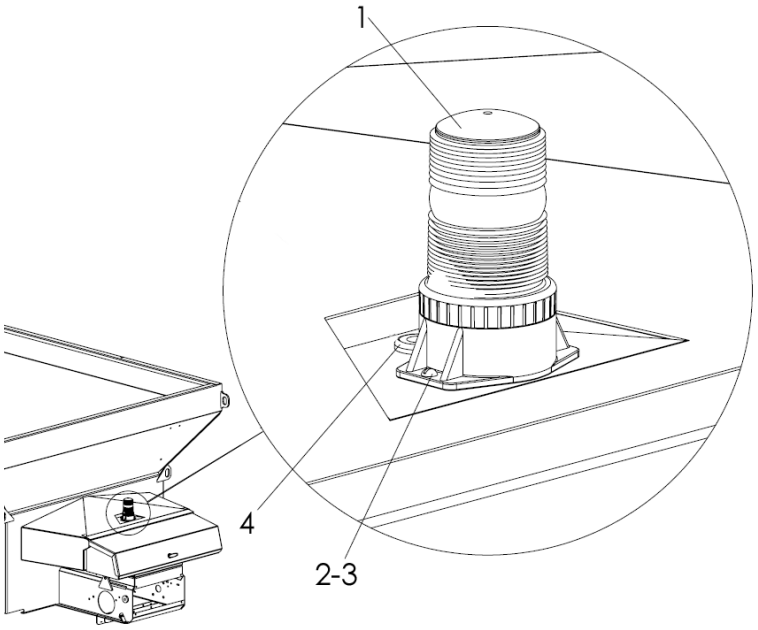

ITEM	PART NO.	DESCRIPTION	QTY
1	308188 308187	Strobe- 360 Beacon- Revolving	1 1
2	*47264	Screw- Round #10-24NC x .75 SS	2
3	*56355	Nut- Lock #10-24NC SS	2
4	*21985	Grommet- Rubber .75	1

*- Not required with 308187

Dump Body Mount Safety Strap

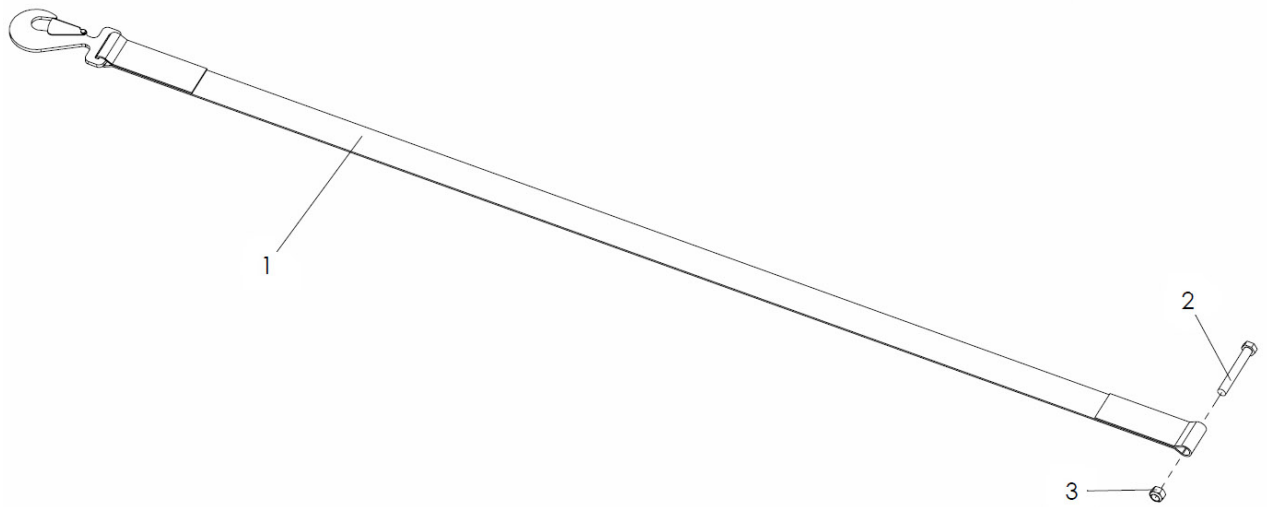

ITEM	PART NO.	DESCRIPTION	QTY
1	308090	Strap- Safety	1
2	20138-X1	Cap Screw- .5-13NC x 3.75	1
3	39016	Nut- Lock .5-13NC SS	1

Subframe

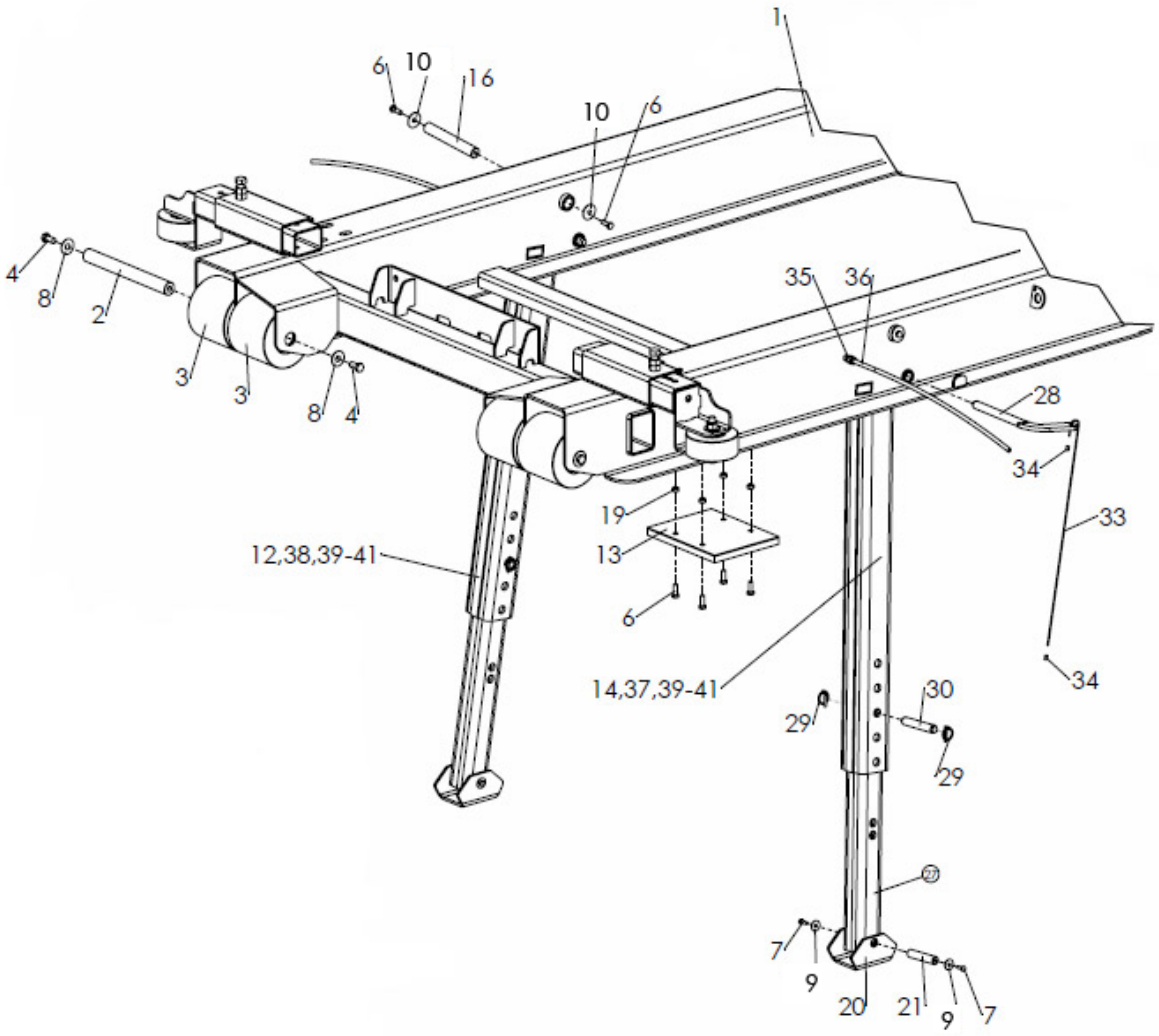
1
6
10
16
10
6
4
8
2
3
3
8
4
35
36
28
34
33
19
13
6
12,38,39-41
14,37,39-41
34
30
29
29
7
9
20
21
9
7

Subframe Continued

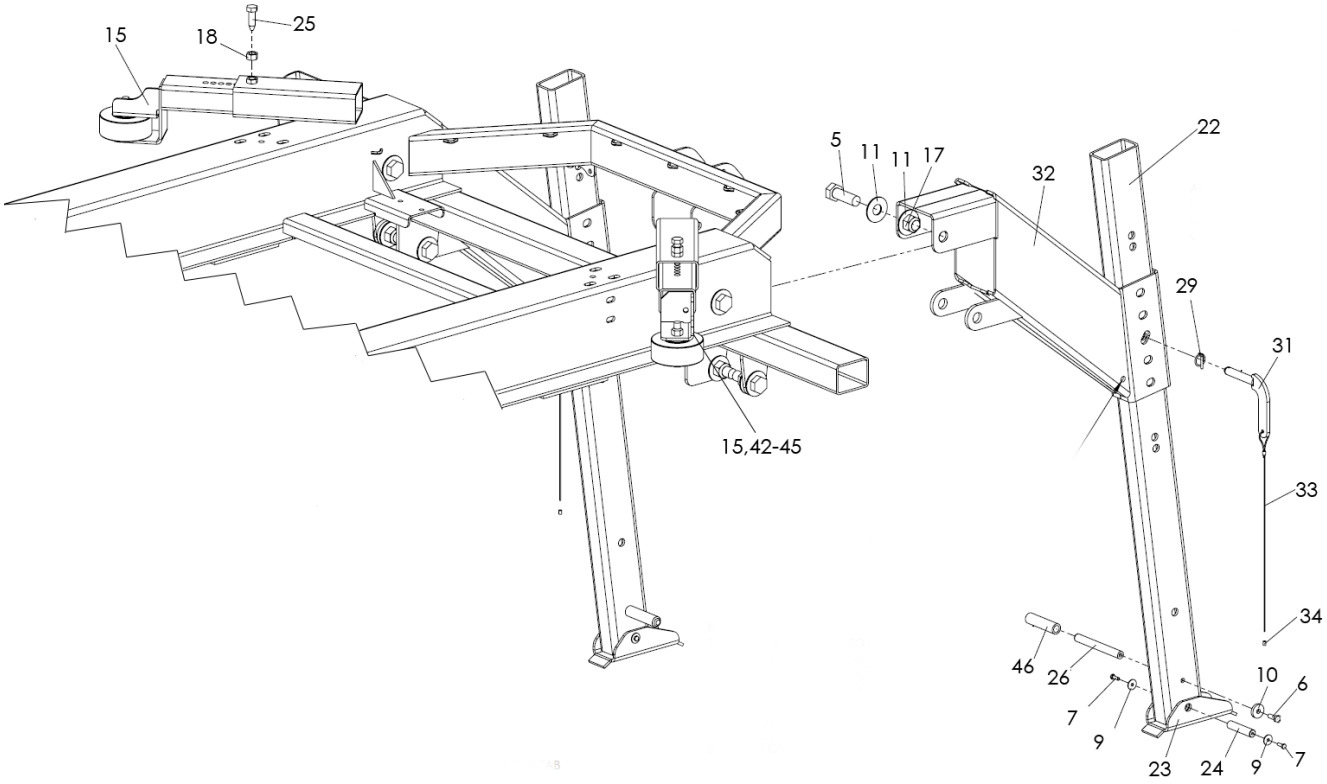

ITEM	PART NO.	DESCRIPTION	QTY
1	308068	Sub-frame- Galvanized 10’	1
	308338	Sub-frame- Galvanized 12’	
	308339	Sub-frame- Galvanized 14’	
2	307790	Axle- wheel sub-frame 304	2
3	307764	Wheel- Mount roll-on	4
4	36401	Cap Screw- .5-13NC x 1 SS	4
5	308086	Cap Screw- 1-8NC x 2.5 SS	8
6	36398	Cap Screw- .375-16NC x 1 SS	22
7	36393	Cap Screw- .25-20NC x .75 SS	8
8	308089	Washer- Fender .5 x 1.5 SS	4
9	308088	Washer- Fender .375 x 1.50 SS	8
10	307746	Spacer- .438 x .25 304	6
11	20700-X1	Washer- Flat 1 SS	16
12	308079	Leg- Assy front RH includes items 38-41	1
13	307794	Pad- Mount rubber	4
14	308078	Leg- Assy front LH includes items 37 and 39-41	1
15	307766	Assy- Guide Wheel includes items 42-45	4
16	307808	Pin- Hinge leg 304	2

Subframe Continued

ITEM	PART NO.	DESCRIPTION	QTY
17	308087	Nut- Lock 1-8NC SS	8
18	36417	Nut- Hex .625-11NC SS	4
19	72054	Nut- Lock .375-16NC SS	16
20	308074	Foot- Front galvanized	2
21	307809	Pin- Hinge foot front 304	2
22	308073	Leg- Rear galvanized	2
23	308075	Foot- Rear galvanized	2
24	307824	Pin- Hinge rear foot 304	2
25	307997	Cap Screw- .625-11NC x 2.5 SS modified	4
26	308001	Handle- Leg 304	2
27	308072	Leg- Front galvanized	2
28	308076	Pin- Lock zinc plated	2
29	308053	Pin- Lynch .188 x 1.25	6
30	308037	Pin- Leg front adjustment 304	2
31	308077	Pin- Rear leg pin plated	2
32	308069	Transition- Galvanized	2
33	308084	Cable- .094 x 24 coated	4
34	308085	Ferrule- .185 x .374	8
35	9005-0-7818	Fitting- 6-2 AA01028	2
36	9005-0-7797	Tubing- .375 OD air brake blue	AR
37	308070	Leg- Front LH galvanized	1
38	308071	Leg- Front RH galvanized	1
39	308080	Tape- VHb 5952 black 1” x 45 mil	6 ft.
40	307806	Flat- 1 x .125 x 36 304	2
41	6072	Zerk- Grease	2
42	308238	Insert- Wldmt wheel guide	4
43	307765	Wheel- Guide side mount	4
44	90967	Cap Screw- .625-11NC x 4 SS	4
45	41762	Nut- Lock .625-11NC SS	4
46	308246	Handgrip- Foam Tube	2

AR- As Required

Truck Chassis Mount Subframe

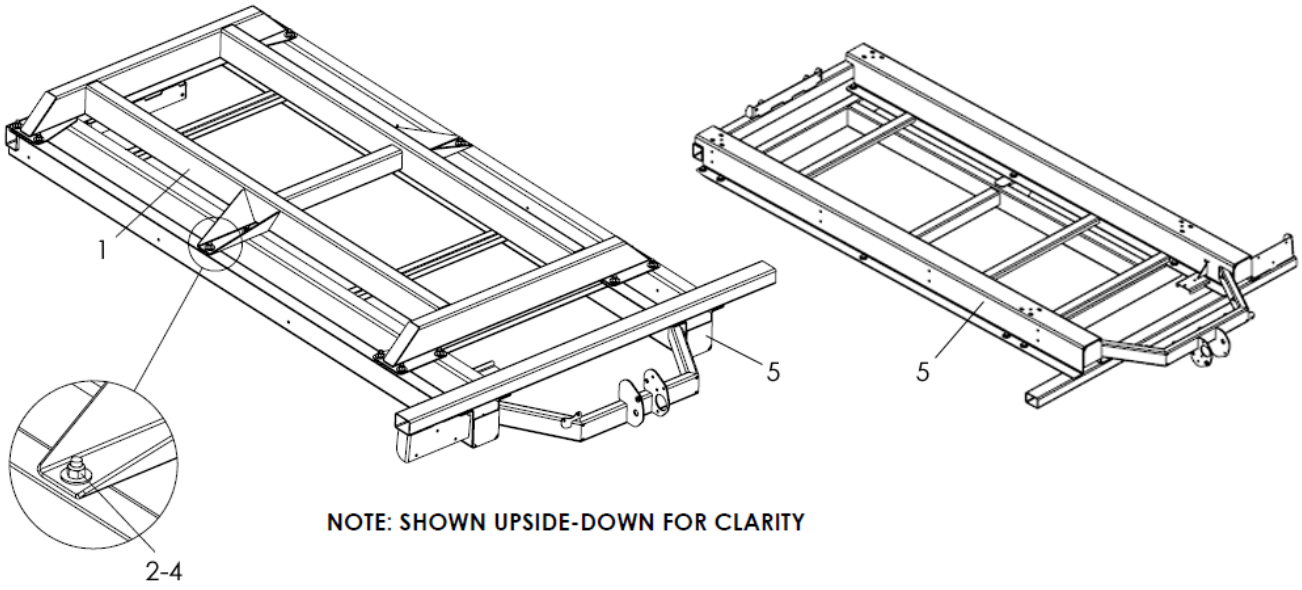

NOTE: SHOWN UPSIDE-DOWN FOR CLARITY

ITEM	PART NO.	DESCRIPTION	QTY
	309494	Frame- Group 10’ Truck Chassis Mount, Includes 1-4	
	309495	Frame- Group 12’ Truck Chassis Mount, Includes 1-4	
	309496	Frame- Group 14’ Truck Chassis Mount, Includes 1-4	
1	309487	Frame- Wldmt 10’	1
	309482	Frame- Wldmt 12’	1
	309466	Frame- Wldmt 14’	1
2	20176	Cap Screw- 5/8-11NC x 1-3/4	AR
3	20697	Washer- Flat 5/8	AR
4	20682	Nut- Lock 5/8-11NC	AR
5	309484	Subframe- Wldmt 10’	1
	309479	Subframe- Wldmt 12’	1
	309464	Subframe- Wldmt 14’	1

Chassis Mounts

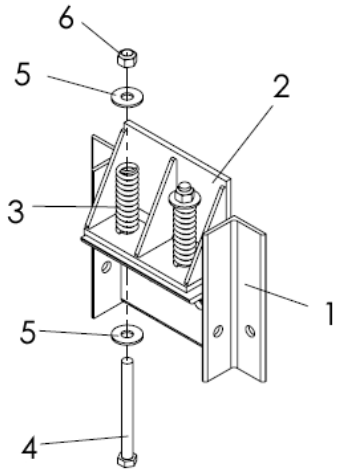

ITEM	PART NO.	DESCRIPTION	QTY
1	301624	Angle- Mount Wldmt	2
2	300275	Mount- Spring Wldmt	2
3	81000	Spring- Compression	4
4	20195	Cap Screw- 5/8-11NC x 6-1/2	4
5	20697	Washer- Flat 5/8	8
6	20682	Nut- Lock 5/8-11NC	4

NOTE: Rear mounts are supplied by installer.

Fenders - 100” Wide

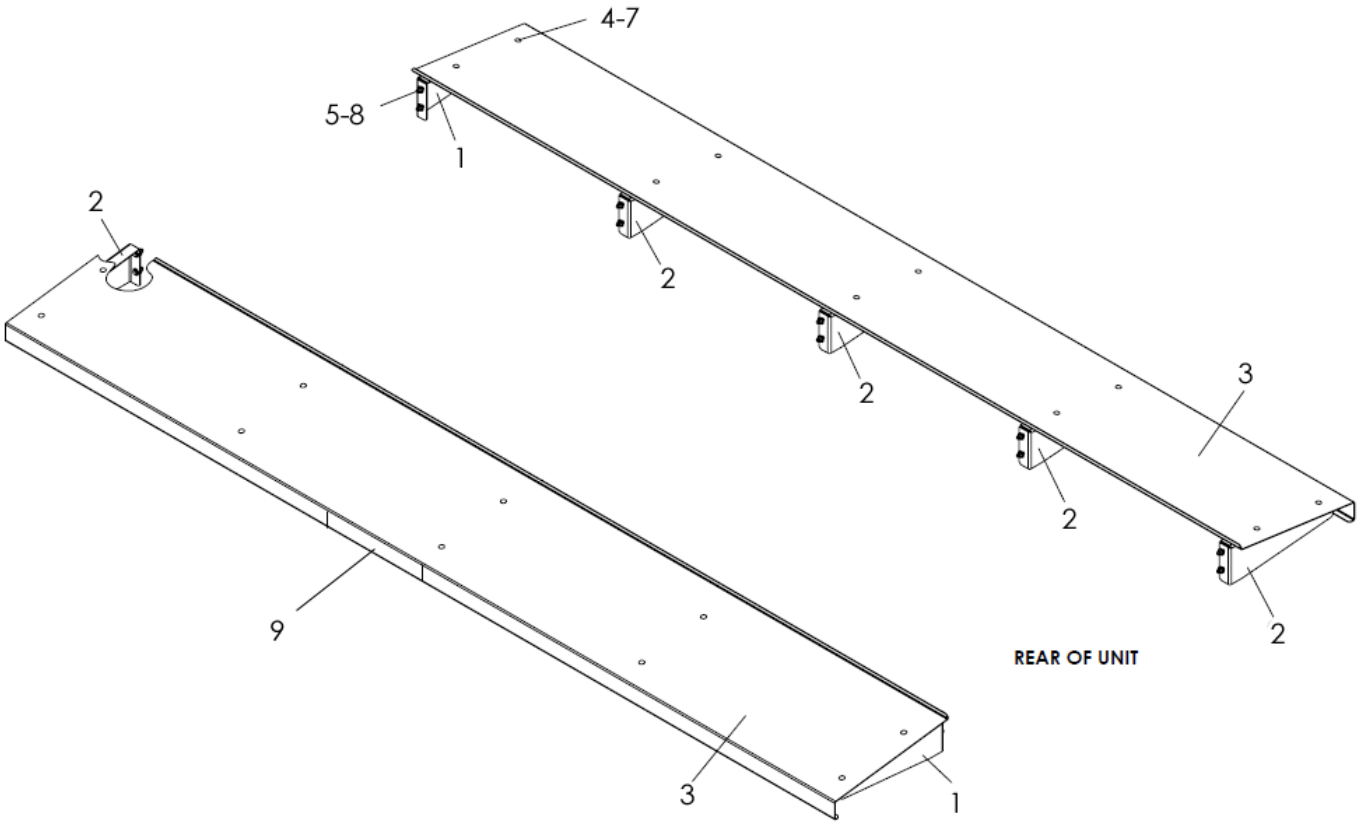

ITEM	PART NO.	DESCRIPTION		QTY
1	309470	Bracket- Fender LH 201	10’ Unit	4
			14’ Unit	5
2	309471	Bracket- Fender RH 201	10’ Unit	4
			14’ Unit	5
3	313020	Fender- Panel 10’ 201		2
	309469	Fender- Panel 14’ 201		2
4	36408	Bolt- Carriage 3/8-16NC x 1 SS		AR
5	36425	Washer- Flat 3/8 SS		AR
6	36420	Washer- Lock 3/8 SS		AR
7	36414	Nut- Hex 3/8-16NC SS		AR
8	36399	Cap Screw- 3/8-16NC x 1-1/4 SS		AR
9	39200	Decal- Warning Slipping Hazard		2

AR- As Required

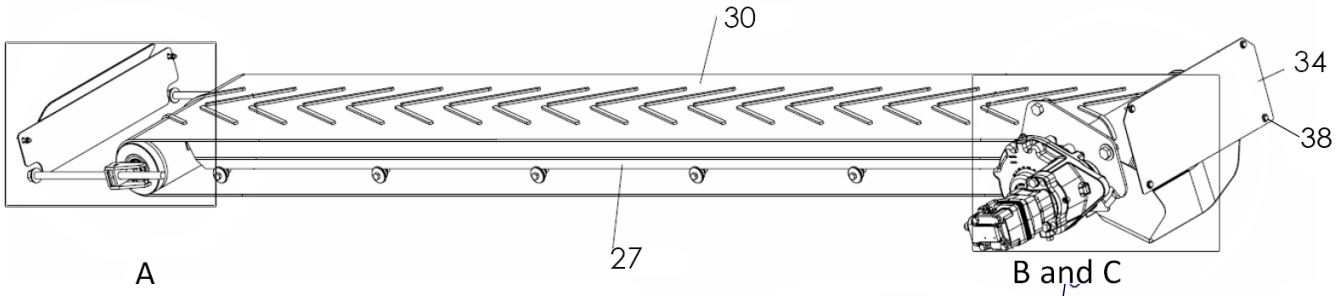

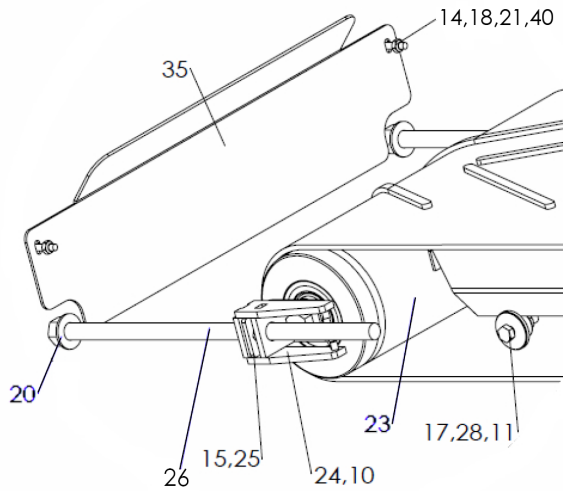

DETAIL A

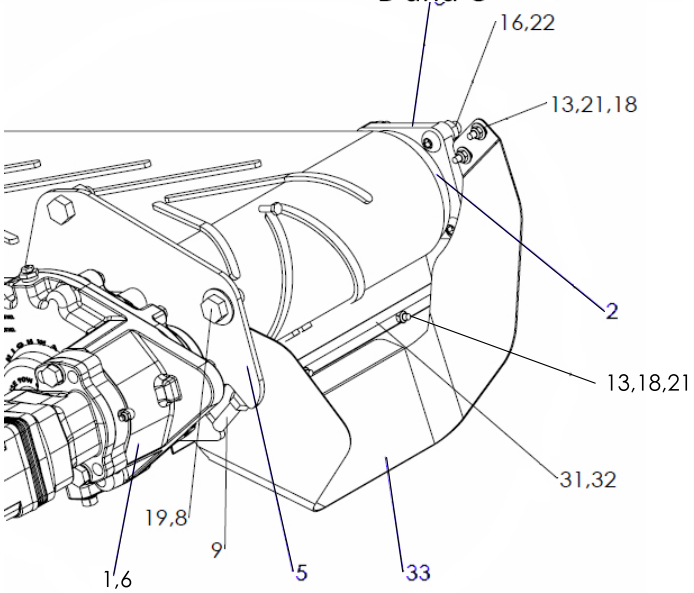

DETAIL B

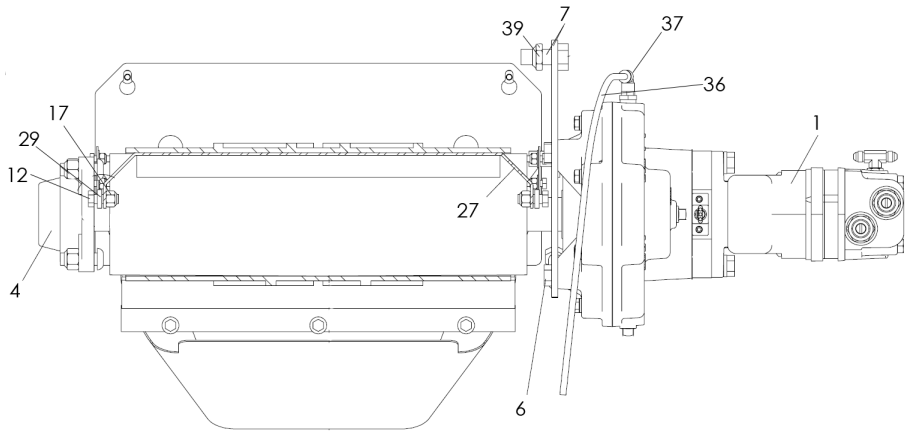

DETAIL C

Conveyor Group Continued

ITEM	PART NO.	DESCRIPTION	QTY
1	307995	Gear Case- Assy Single Pinion 6:1 * parts list under “Gear Case”	1
2	307934	Roller- Drive Crowned	1
3	307958	Bearing- 4BF 1.375 Bore Composite	1
4	307981	Cap- Bearing Closed	1
5	307954	Mount- Gear Case 304	1
6	36401	Cap Screw- .5-13NC x 1 SS	4
7	307960	Cap Screw- .625-11NC x 1.5 SS	1
8	34857	Cap Screw- .625-11NC x 1.25 SS	1
9	307959	Cap Screw- .5-13NC x 1.75 SS Fully Threaded	1
10	308217	Cap Screw- .625-18NF x 1.75 SS	2
11	34858	Cap Screw- .375-16NC x 1.5 SS	AR
12	36398	Cap Screw- .375-16NC x 1 SS	2
13	36393	Cap Screw- .25-20NC x .75 SS	10
14	40750	Cap Screw- .25-20NC x 1.25 SS	2
15	36417	Nut- Hex .625-11NC SS	2
16	39016	Nut- Lock .5-13NC SS	4
17	72054	Nut- Lock .375-16NC SS	AR
18	42034	Nut- Lock .25-20NC SS	12
19	56857	Washer- Flat .625 SS	1
20	307977	Washer- Flat .625 SAE SS	2
21	36423	Washer- Flat .25 SS	14
22	304484	Screw- Buttonhead .5-13NC x 1.5	4
23	307933	Roller- Assy Idler * parts list under “Idler Assembly”	1
24	307962	Take-up- Wldmt 304	2
25	307966	Retainer- Nut 304	2
26	307991	Take-up- Wldmt Bolt	2
27	307989	Bottom- Panel 10’ 304	1
	308348	Bottom- Panel 12’ 304	1
	308349	Bottom- Panel 14’ 304	1
28	307990	Support- Bottom Panel 304	AR
29	307996	Spacer- .391 ID x 7GA 304	2
30	307762	Belt- Endless 240	1
	308350	Belt- Endless 288	1
	308351	Belt- Endless 336	1
31	307998	Holder- Brush 16” SS	2
32	307781	Brush- Strip	2

Conveyor Group Continued

ITEM	PART NO.	DESCRIPTION	QTY
33	310672	Chute- Conveyor Coated 304	1
34	308128	Cover- Conveyor Rear 304	1
35	380127	Cover- Conveyor Front 304	1
36	9005-0-7761	Tubing- .25 OD Air Brake	1.5 ft.
37	306891	Fitting- 4-2 630202K	1
38	308239	Cap Screw- Flange .25-20NC x .75 SS	4
39	56288	Nut- Lock Thin .625-11NC SS	1
40	36412	Nut- Hex .25-20NC SS	2

AR- As Required

Gearcase

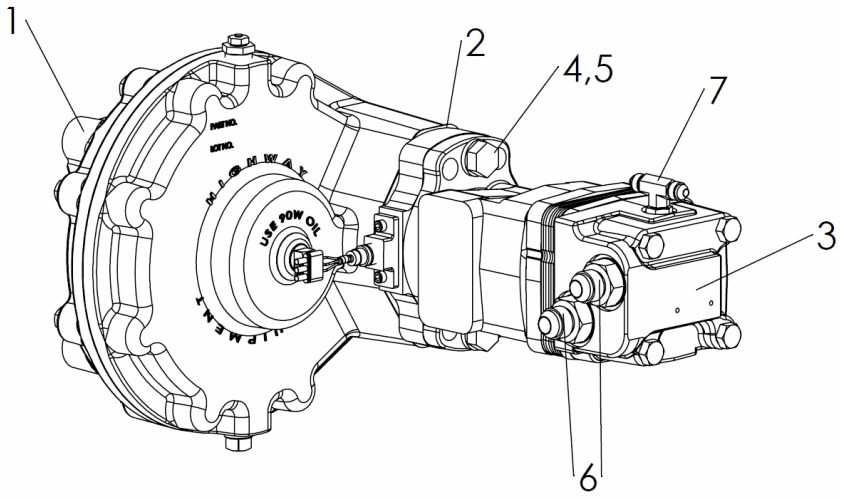

ITEM	PART NO.	DESCRIPTION	QTY
1	307943	Gear Case- 6:1 Single Pinion	1
2	74524	Gasket- SAE 101-2 (B)	1
3	307869	Motor- Hyd 4.6 CID	1
	56257	Speed- Sensor 3-Pin Weather Pack (Service Only)	1
4	20132	Cap Screw- .5-13NC x 2.25	2
5	20714	Washer- Lock .5	2
6	29771	Fitting- 8-10 070120	2
7	34700	Fitting- 4-4-4 070429	1

Conveyor Idler

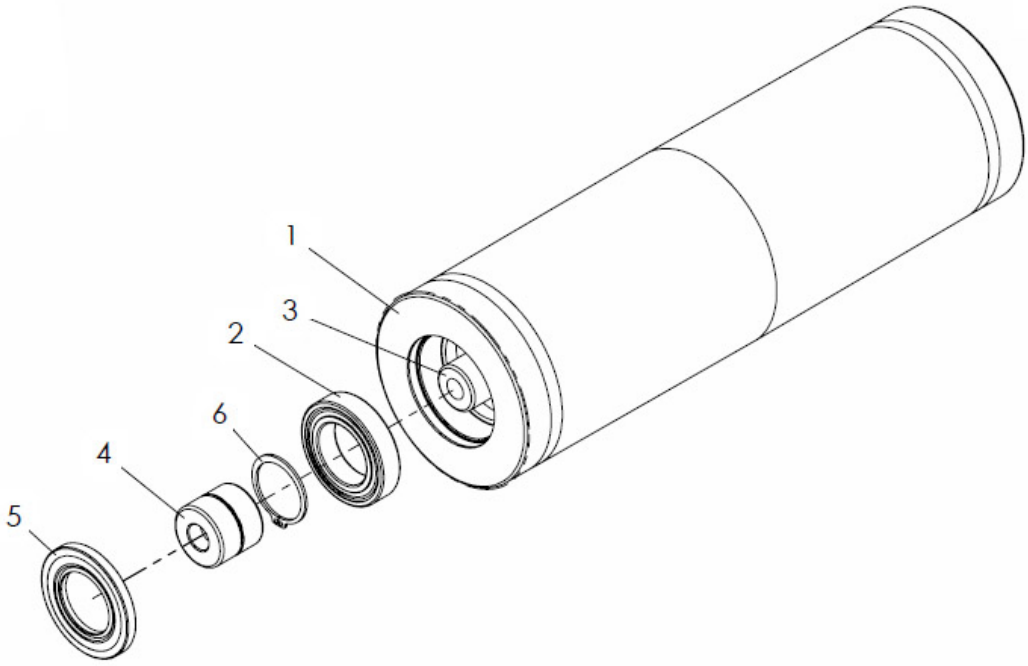

ITEM	PART NO.	DESCRIPTION	QTY
1	307750	Roller- Idler crowned SS	1
2	307928	Bearing- Ball 40mm	2
3	307929	Shaft- Idler	1
4	307930	Cap- Shaft retaining 304	2
5	307932	Seal- Shaft 40mm	2
6	307931	Ring- Snap external 40mm	2

Belt Shields

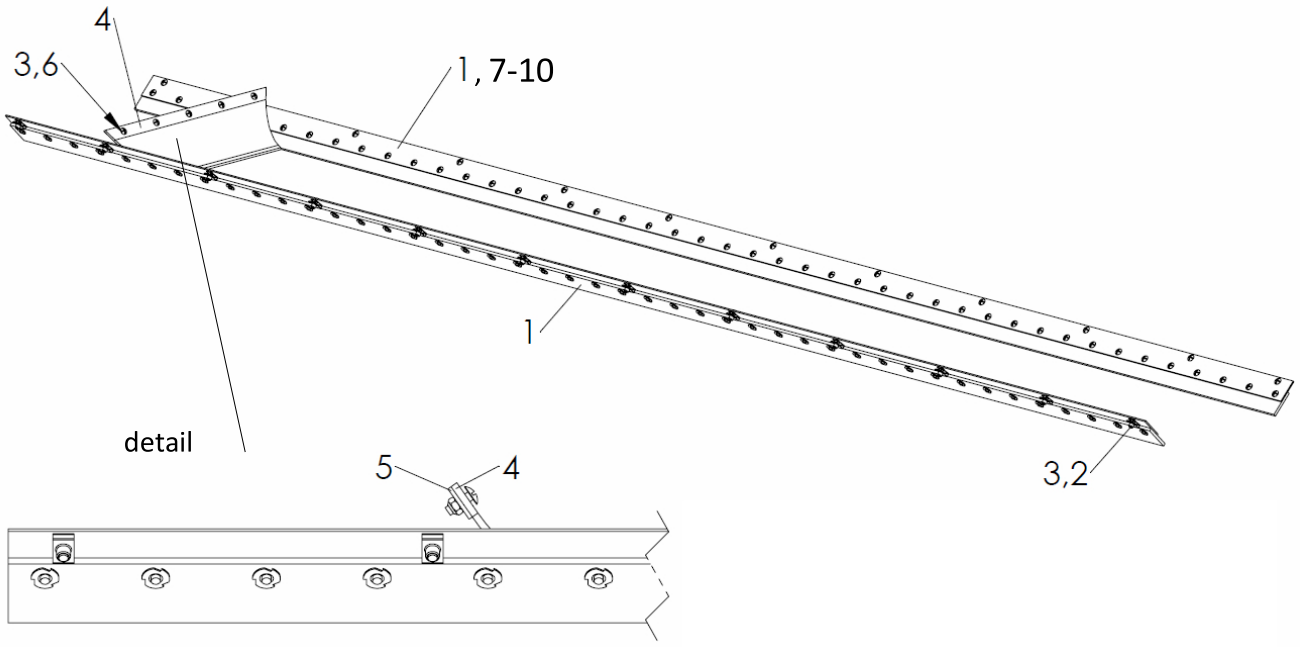

ITEM	PART NO.		DESCRIPTION	QTY
	CS	304		
1	308123	308309	Shield- Chain Assy 10’ includes 7-10	2
	308354	308360	Shield- Chain Assy 12’ includes 7-10	2
	308355	308361	Shield- Chain Assy 14’ includes 7-10	2
2	300252	300252	U-Nut .25-20	AR
3	21378	32446	Screw- Truss Head .25-20NC x .75	AR
4	308125	308125	Belt- Wiper Front	1
5	308126	308311	Retainer- Belt	1
6	20676	42034	Nut- Lock .25-20NC	5
7	308124	308310	Shield- Chain 10’	2
	308356	308362	Shield- Chain 12’	2
	308357	308363	Shield- Chain 14’	2
8	53950	53950	Belting	AR
9	88931	88931	Nut- Tee .25 x .25	AR
10	20624	56258	Screw- Truss Head .25-20NC x .5	AR

AR- As Required

This page is intentionally left blank.

Spinner Pivot

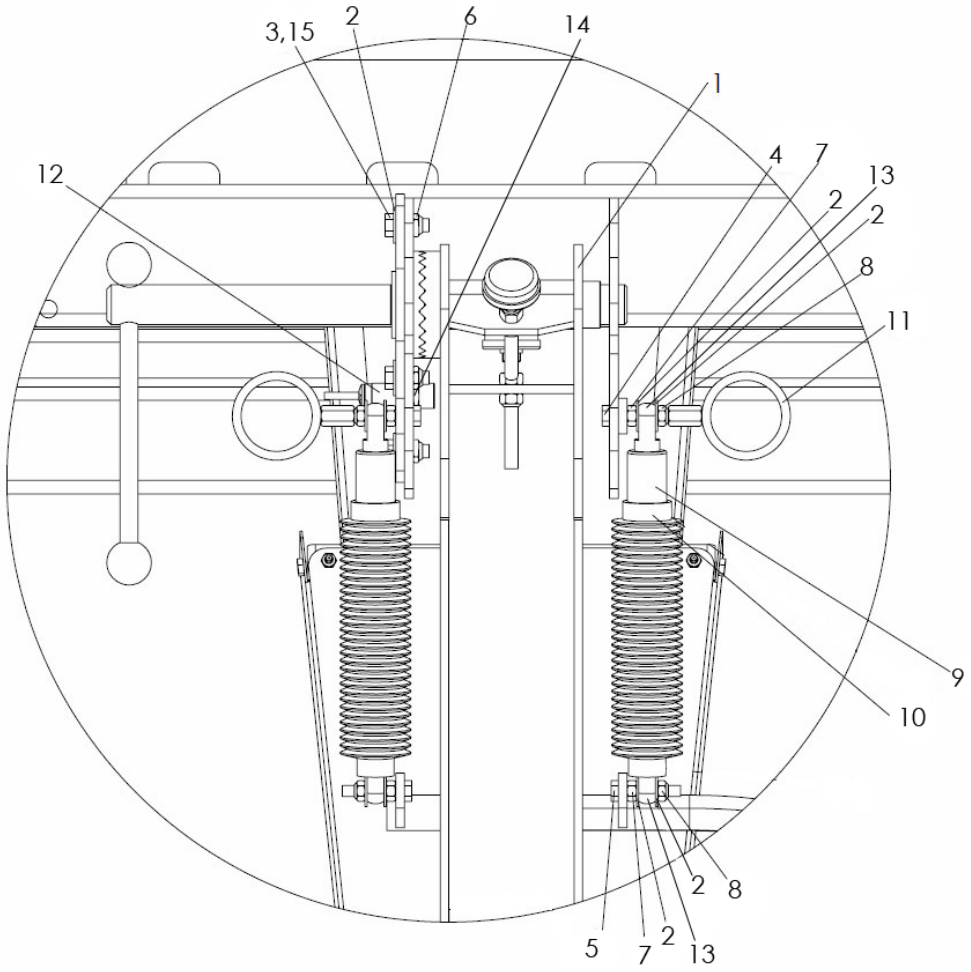

ITEM	PART NO.	DESCRIPTION	QTY
1	308057	Spinner- Group	1
2	36425	Washer- Flat .375 SS	8
3	36399	Cap Screw- .375-16NC x 1-1/4 SS	3
4	308224	Cap Screw- .375-16NC x 2.5	2
5	308225	Cap Screw- .375-16NC x 1.75	2
6	307395	Nut- Lock thin .375-16NC SS	3
7	36414	Nut- Hex .375-16NC SS	4
8	72054	Nut- Lock .375-16NC SS	4
9	307972	Spring- Gas	2
10	307969	Bellows- Rod	2
11	307984	Ring- Wldmt 304	2
12	308179	Sensor- 18mm	1
13	308315	Rod End 304	4
14	308237	Washer- Star Internal	2
15	307746	Spacer- .438 x 1/4 304	3

Spinner Assembly

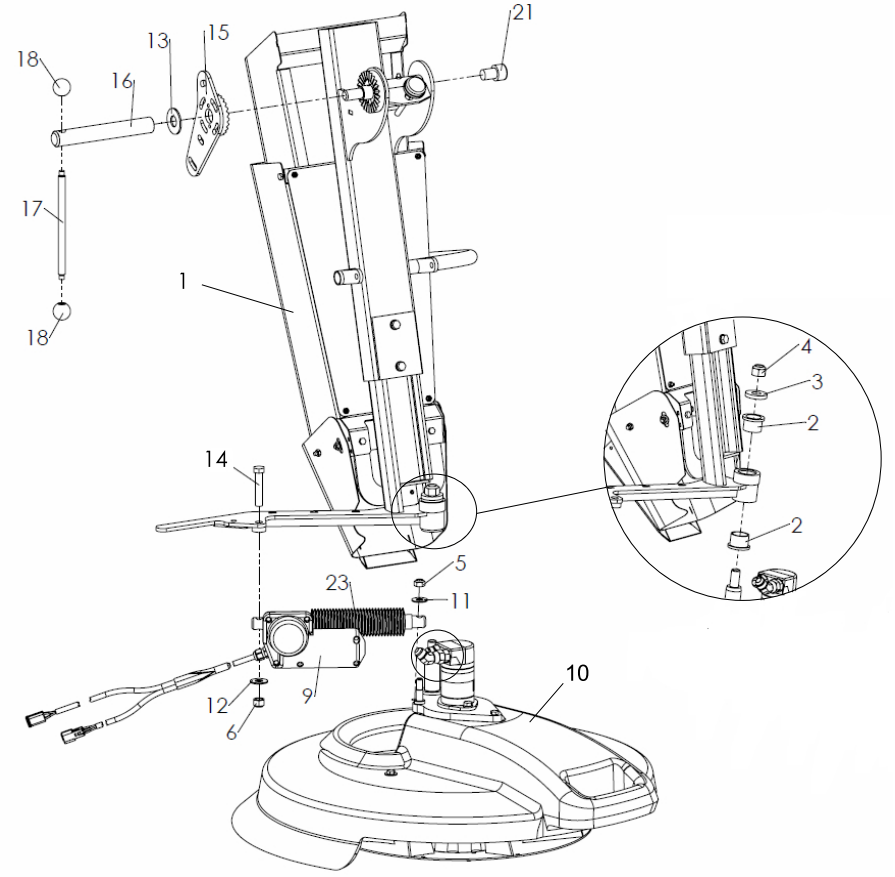

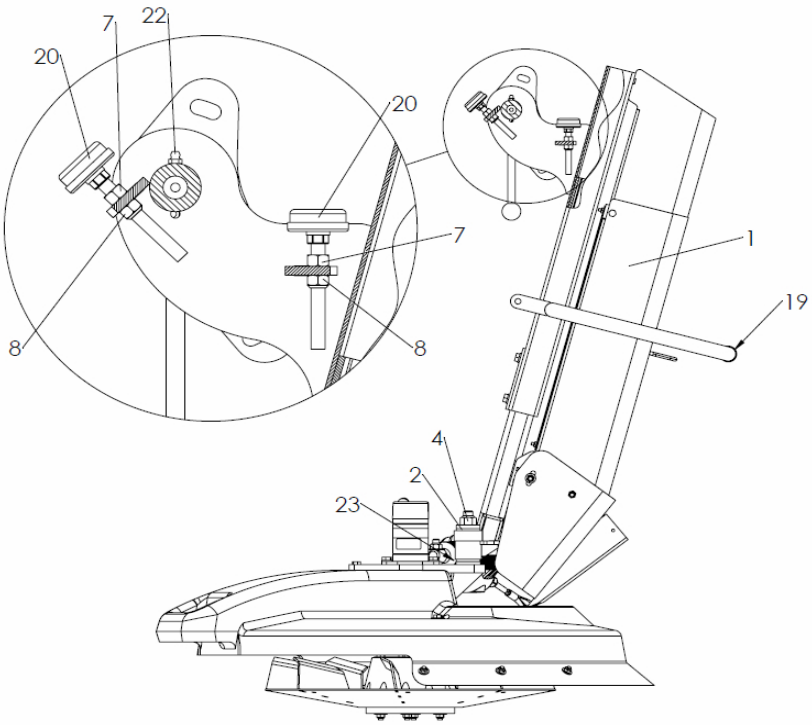

Spinner Assembly Continued

ITEM	PART NO.	DESCRIPTION	QTY
1	307827	Chute- Assy 304 * parts list under “Chute Assembly”	1
2	307887	Bearing- Flanged Bronze	2
3	307935	Washer- 1.563 OD x .656 ID x .250 304	1
4	41762	Nut- Lock .625-11NC SS	1
5	307987	Nut- Lock .438-20NF SS	1
6	39016	Nut- Lock .5-13NC SS	1
7	36414	Nut- Hex .375-16NC SS	2
8	72054	Nut- Lock .375-16NC SS	2
9	310168	Actuator- Linear Electric with DTM04-3P and DT06-4S	1
10	307861	Spinner- Assy Lower * parts list under “Lower Spinner Assembly”	1
11	36295	Washer- Flat .438 SS	1
12	36426	Washer- Flat .5 SS	1
13	56408	Washer- Flat .75 304	1
14	42454	Cap Screw- .5-13NC x 2.5 SS	1
15	307914	Lock- Wldmt Chute 304	1
16	307916	Bar- Chute Rotation Lock 304	1
17	307917	Handle- 304	1
18	307918	Knob- 1.25	2
19	307953	Grip- Round Vinyl	1
20	307973	Foot- Leveling Neoprene	2
21	307920	Screw- Socket HD .75-10NC x 1 SS	1
22	6072	Zerk- Grease	1
23	307969	Bellows- Rod	1

Lower Spinner Assembly

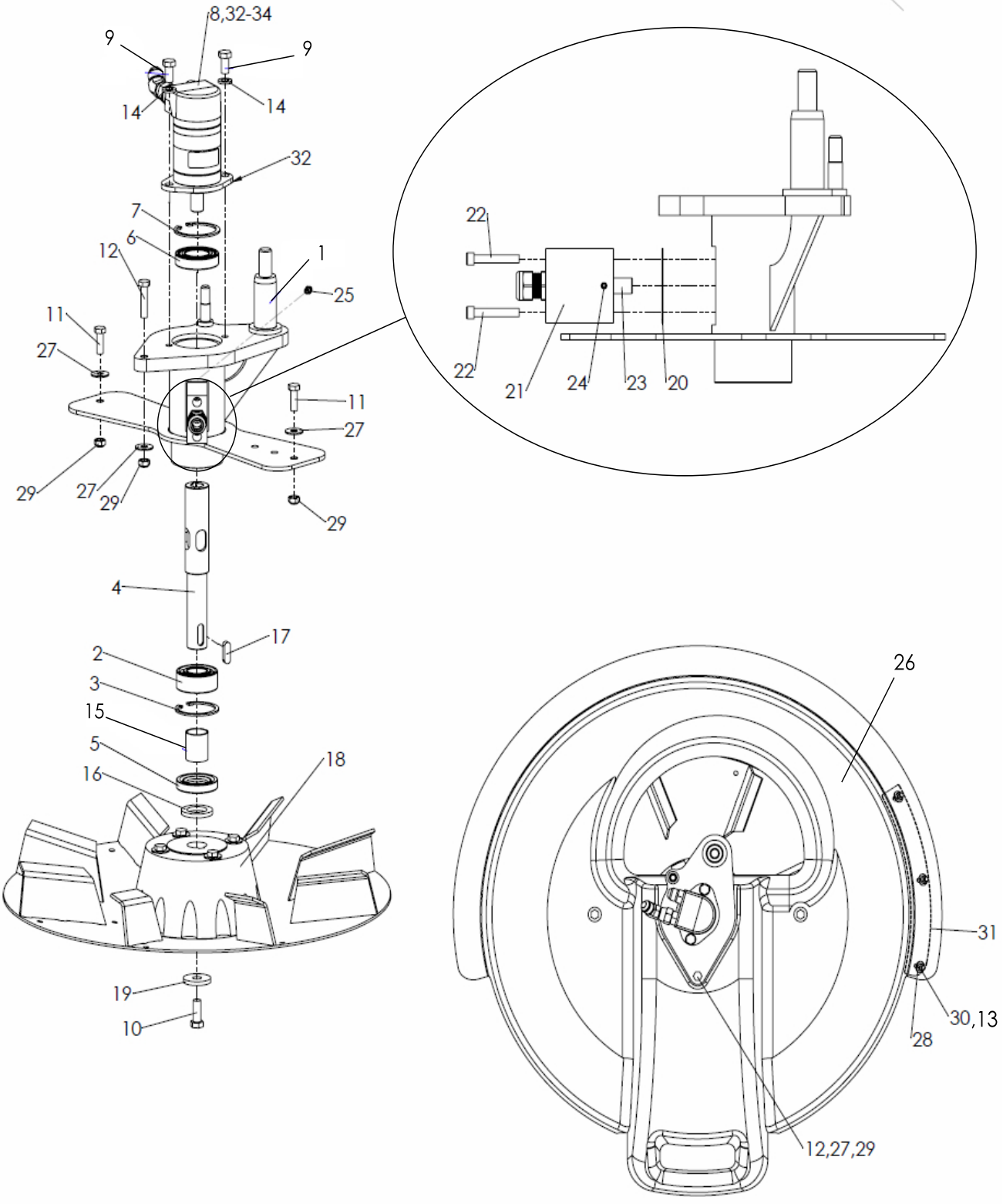

Lower Spinner Assembly Continued

ITEM	PART NO.	DESCRIPTION	QTY
1	307883	OHLA- Wldmt 304	1
2	307876	Bearing- Ball Double Row 25mm	1
3	307877	Ring- Snap Internal 52mm	1
4	307873	Shaft- OHLA 304	1
5	307881	Seal- Shaft 28mm	1
6	307878	Bearing- Ball 30mm	1
7	307879	Ring- Snap Internal 55mm	1
8	307967	Motor- Assy Hyd includes items 32-34	1
9	36293	Cap Screw- .375-16NC x .75 SS	2
10	312456	Cap Screw- .375-16NC x 1 SS w/ Nylon Strip	1
11	34580	Cap Screw- .313-18NC x 1 SS	2
12	308056	Cap Screw- .313-18NC x 1.5 SS	1
13	36394	Cap Screw- .25-20NC x .875 SS	3
14	36420	Washer- Lock .375 SS	2
15	307882	Spacer- Spinner 304	1
16	307880	Spacer- 1.000 ID x 7 GA 304	1
17	307747	Key- Rect .313 x .25 x 1 SS	1
18	307773	Spinner- Disc Assy * parts list under “Spinner Disc Assembly”	1
19	307746	Spacer- .438 ID x 7GA 304	1
20	307885	Gasket- Mount Sensor	1
21	307884	Block- Sensor	1
22	308047	Cap Screw- Socket HD .25-20NC x 1.5 SS	2
23	308177	Sensor- 12mm	1
24	308048	Screw- Set Nylon Tip #10-24NC x .25 SS	1
25	6072	Zerk- Grease	1
26	307919	Shroud- Spinner	1
27	36424	Washer- Flat .313 SS	3
28	36423	Washer- Flat .25 SS	6
29	42221	Nut- Lock .313-18NC SS	3
30	42034	Nut- Lock .25-20NC SS	3
31	307961	Strip- Wear 304	1
32	307783	Motor- Hyd 1.21 CID	1
33	34809	Fitting- 8-6 070120	2
34	34805	Fitting- 8-8 070321	1

Chute Assembly

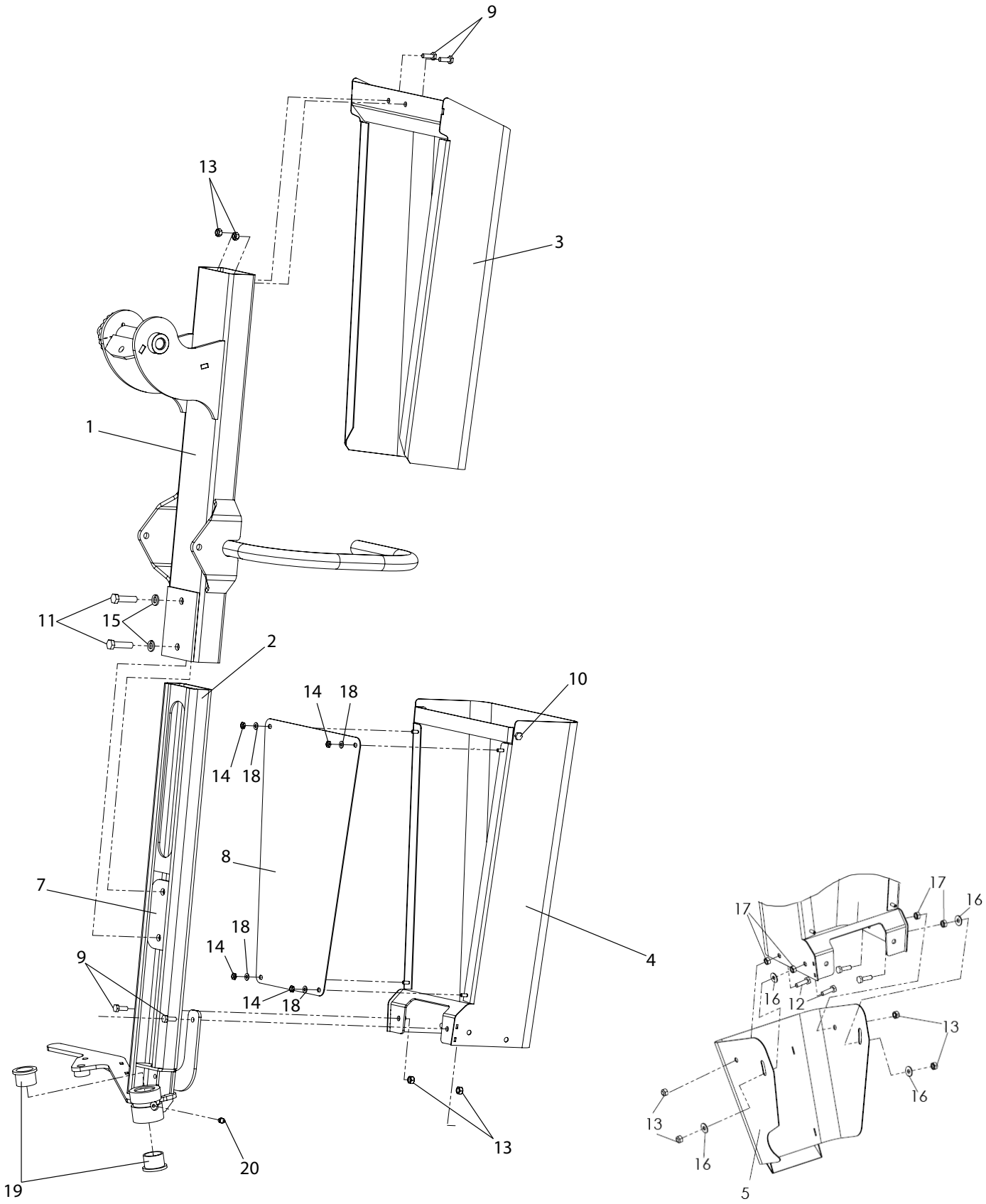

Chute Assembly Continued

ITEM	PART NO.	DESCRIPTION	QTY
1	307828	Support- Wldmt chute upper 304	1
2	307833	Lower Chute Support- Wldmt 304	1
3	313904	Chute- Wldmt upper 304	1
4	313905	Chute- Wldmt lower 304	1
5	308059	Chute- Lower deflector coated 304	1
6	308312	Bracket- Wldmt Lower Chute 304	1
7	307853	Chute Lock Plate- Wldmt 304	1
8	307856	Cover- Lower chute 304	1
9	36393	Cap Screw- .25-20NC x .75 SS	4
10	308227	Cap Screw- .25-20NC x .625 SS	2
11	34858	Cap Screw- .375-16NC x 1.5 SS	2
12	36394	Cap Screw- .25-20NC x .875 SS	4
13	42034	Nut- Lock .25-20NC SS	10
14	307974	Nut- Lock #10-32NF SS	4
15	36420	Washer- Lock .375 SS	2
16	36423	Washer- Flat .25 SS	4
17	36412	Nut- Hex .25-20NC SS	4
18	171052	Washer- Flat SS	4
19	307887	Bearing- Flanged Bronze	2
20	311663	Zerk- Grease .25-28 SS	1

Spinner Disc

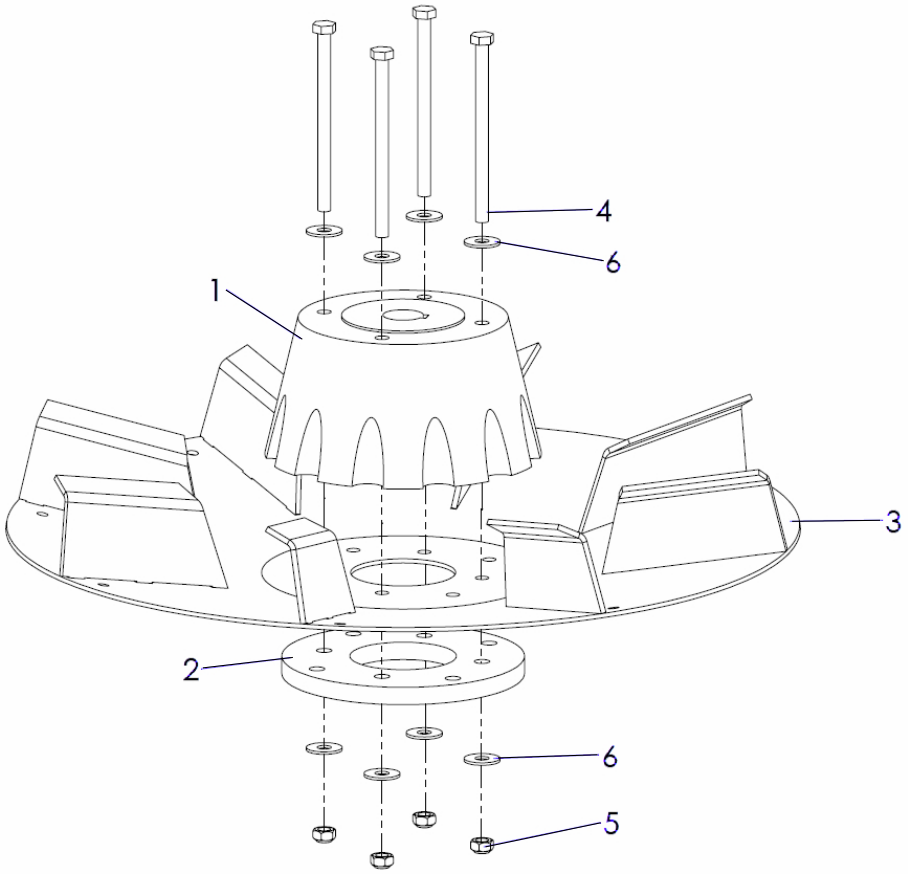

ITEM	PART NO.	DESCRIPTION	QTY
1	307776	Hub	1
2	307777	Hub- Bottom Doubler	1
3	307774	Spinner- Wldmt Disc 304	1
4	307921	Cap Screw- .313-18NC x 4.5 SS	4
5	42221	Nut- Lock .313-18NC SS	4
6	36424	Washer- Flat .313 SS	8

Spinner Flood Light

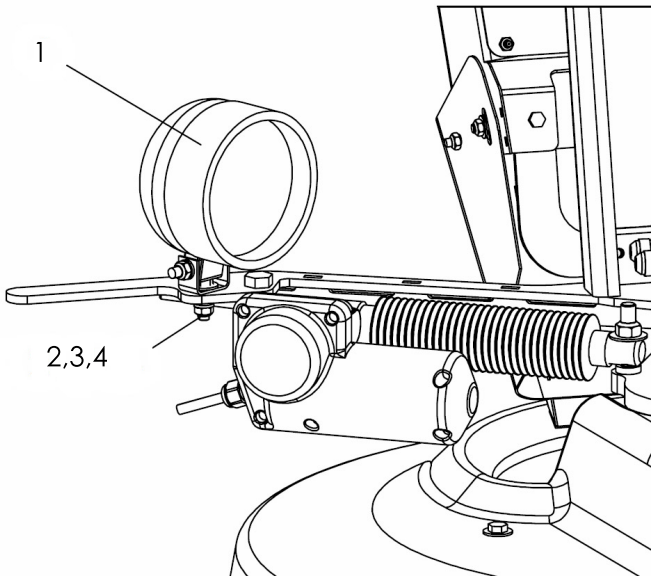

ITEM	PART NO.	DESCRIPTION	QTY
1	308189	Light- Work/Flood	1
2	36424	Washer- Flat .313 SS	2
3	42221	Nut- Lock .313- 18NC SS	1
4	34580	Cap Srcrew- .313- 18NC x 1 SS	1

Liquid Pump System

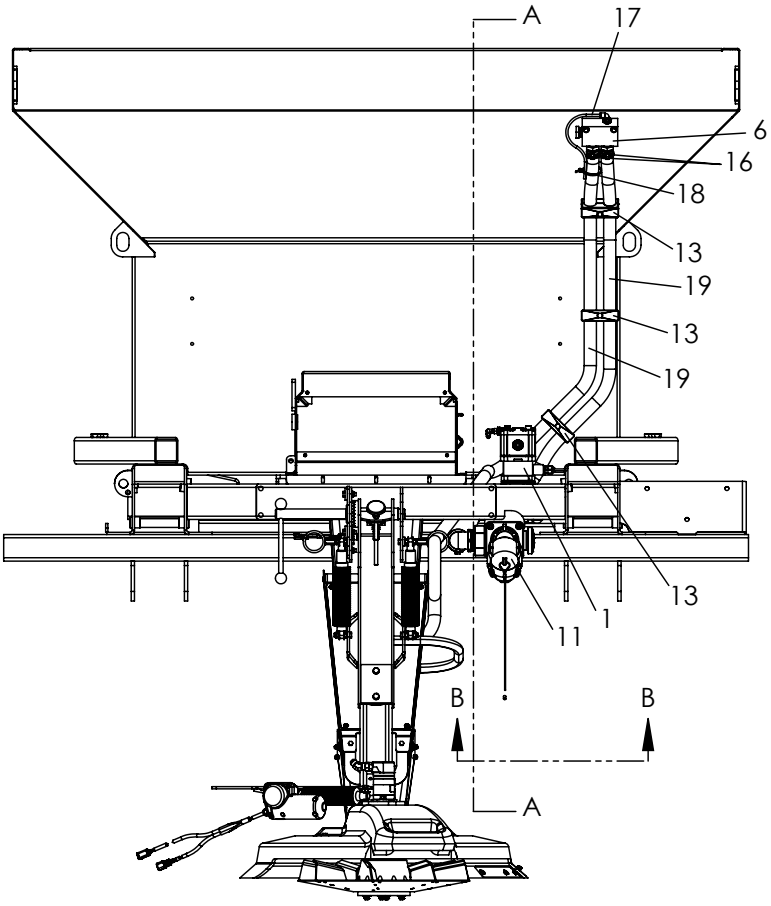

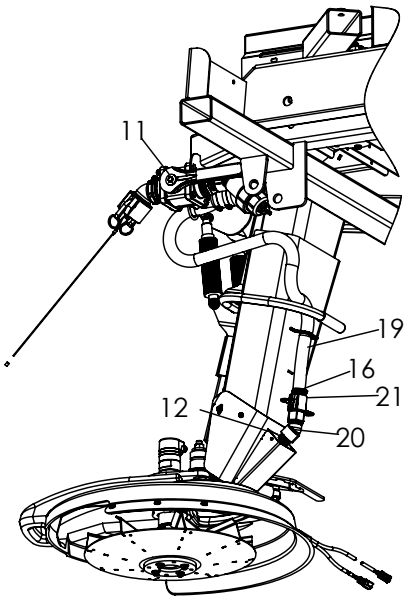

LIQUID DIFFUSER PLUMBING

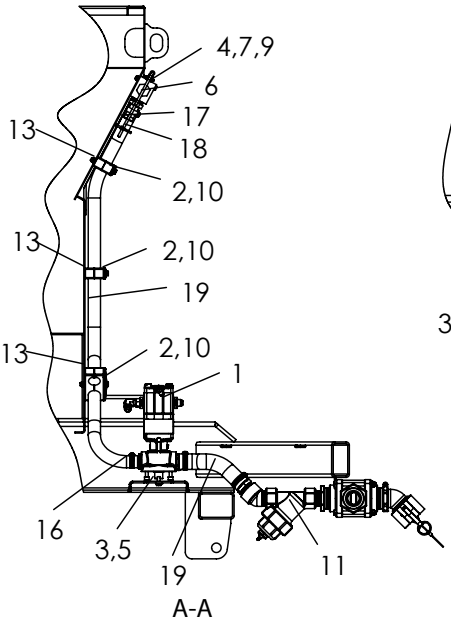

A-A

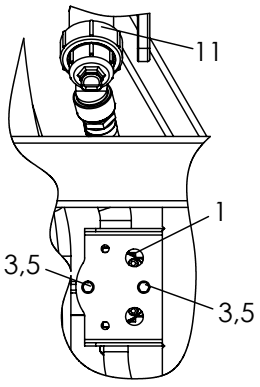

B-B

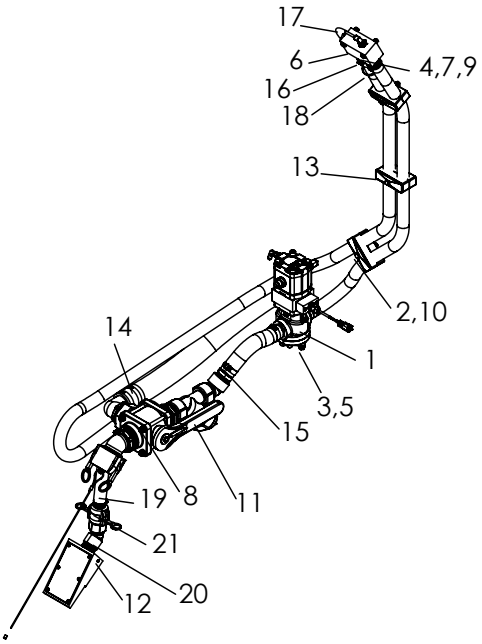

Liquid Pump System Continued

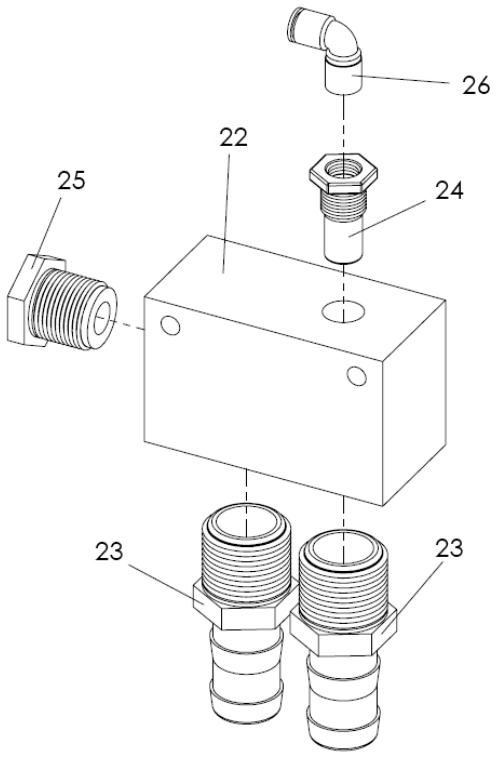

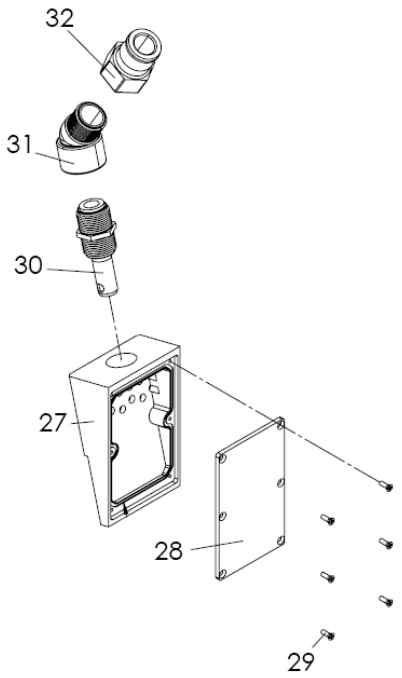

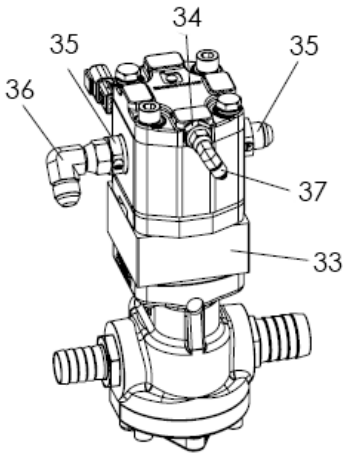

Liquid Pump System Continued

ITEM	PART NO.	DESCRIPTION	QTY
1	308043	Pump- Assy, includes items 33-37	1
2	96258	Cap Screw- .313-18NC x 3 SS	3
3	308040	Cap Screw- M8 x 20 SS	2
4	34501	Cap Screw- .25-20NC x 2.5 SS	2
5	36420	Washer- Lock .375 SS	2
6	308011	Manifold- Assy Anti-Siphon, includes items 22-26	1
7	36423	Washer- Flat .25 SS	2
8	307395	Nut- Lock Thin .375-16NC SS	2
9	42034	Nut- Lock .25-20NC SS	2
10	42221	Nut- Lock .313-18NC SS	3
11	308019	Valve- Assy Fill/Pump Poly, see ***Fill/Pump Valve Assy*** parts list	1
12	56315	Screw- Self drilling #6-20NC x .5 SS	2
13	308033	Clamp- Tubing 1.33	3
14	308029	Clamp- Hose SAE 36 SS	4
15	308028	Clamp- Hose SAE 24 SS	2
16	308223	Clamp- Hose SAE 16 SS	4
17	9005-0-7761	Tubing- .25 OD air brake black	1ft
18	306836	Wire Tie	1
19	309426	Hose- Group Liquid, see ***Liquid System Hose Group*** parts list	1
20	310678	Diffuser- Assy, includes items 27-32	1
21	310675	Coupling- 1” female x 1” hose poly	1
22	307970	Manifold- Anti-Siphon	1
23	307895	Fitting- Hose barb 1” Hose x 1” MNPT Poly	2
24	308012	Valve- Vacuum breaker .375 NPT SS	1
25	307901	Fitting- Plug .75 NPT hex Head Poly	1
26	308222	Fitting- 4-4 630202K	1
27	307948	Diffuser	1
28	307949	Cover- Diffuser	1
29	307947	Screw- Self-Tapping	6
30	310677	Insert- Assy Diffuser	1
31	310673	Elbow- 90 deg 1” NPT Poly	1
32	310674	Adapter- 1” male x 1” female MNPT poly	1
33	308181	Pump- Hyd 50cc Gear with DTM04-3P 57”	1
34	308045	Fitting- .25 BSPP male x .25 JIC male	1
35	308044	Fitting- .50 BSPP male x .50 JIC male	2
36	34803	Fitting- 8-8 070221	1
37	34868	Fitting- 4-4 070221	1

Liquid Pump System - High Volume

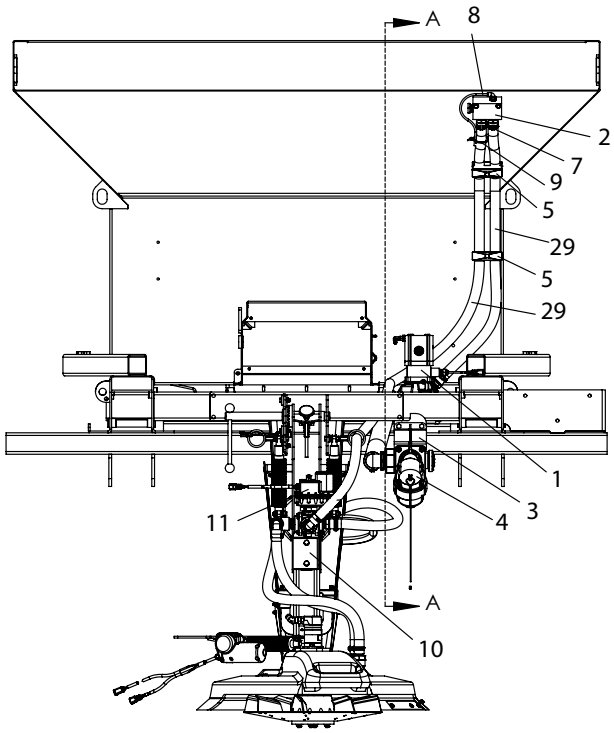

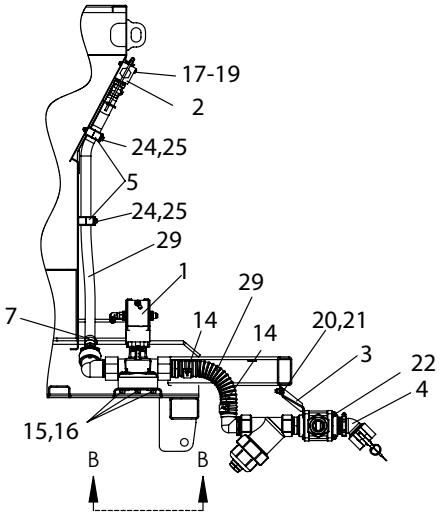

SECTION A-A

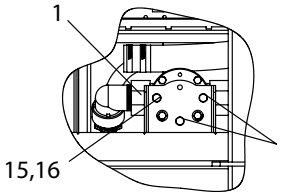

VIEW B-B

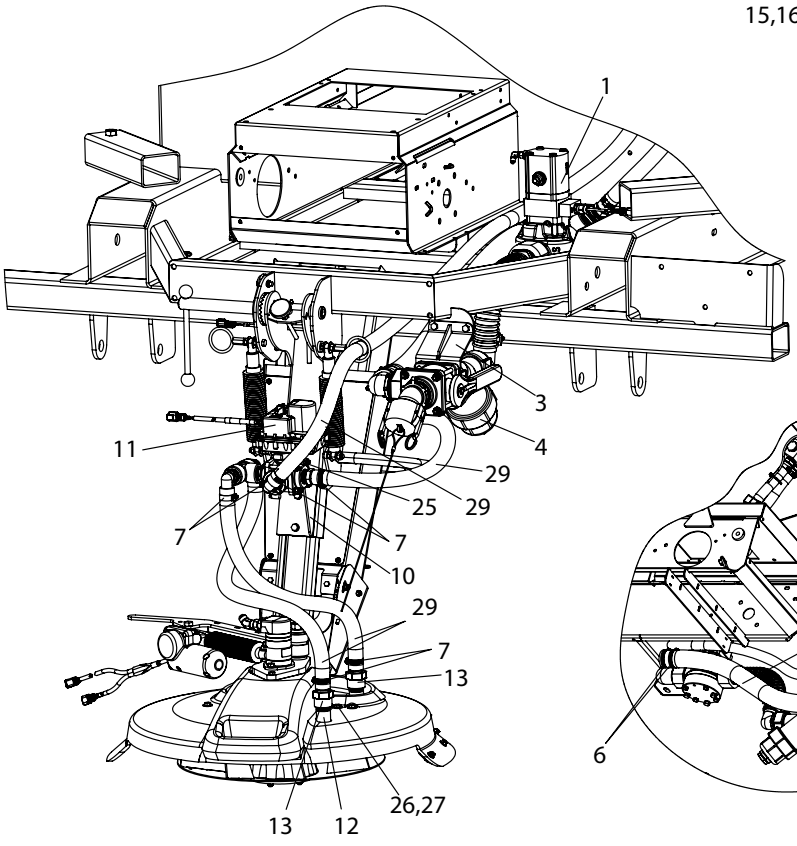

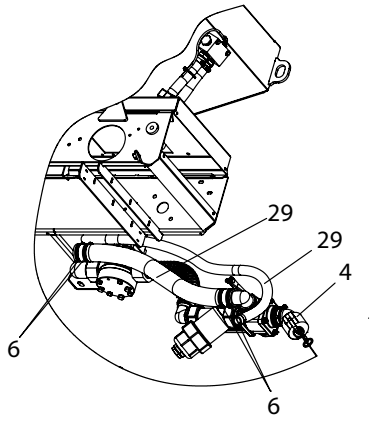

SELECTOR VALVE DETAIL

Liquid Pump System - High Volume Continued

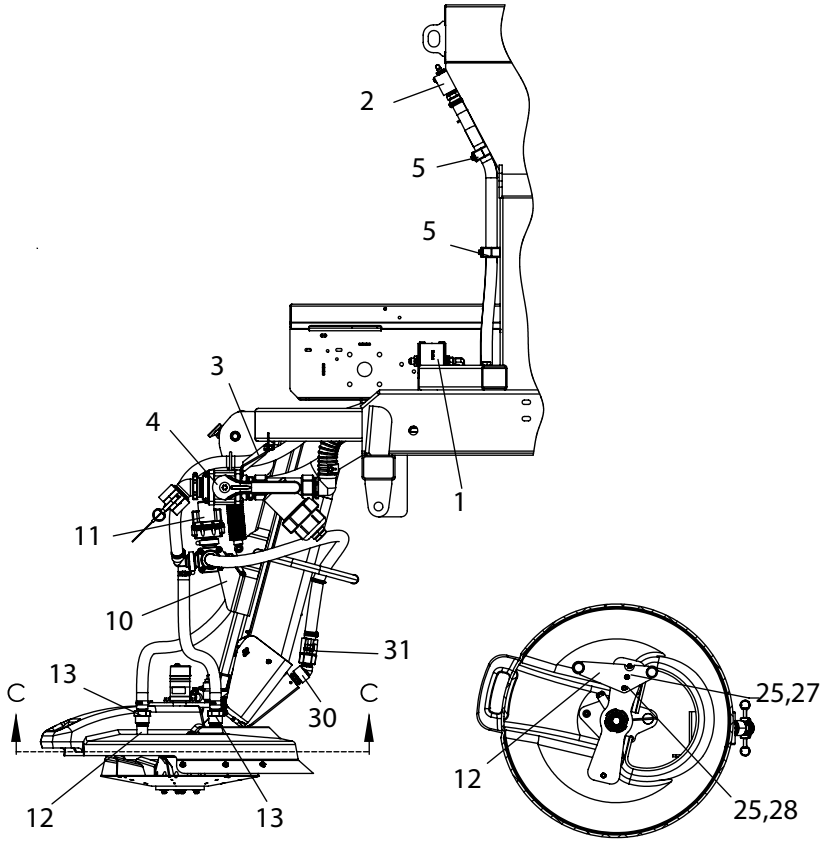

SECTION C-C

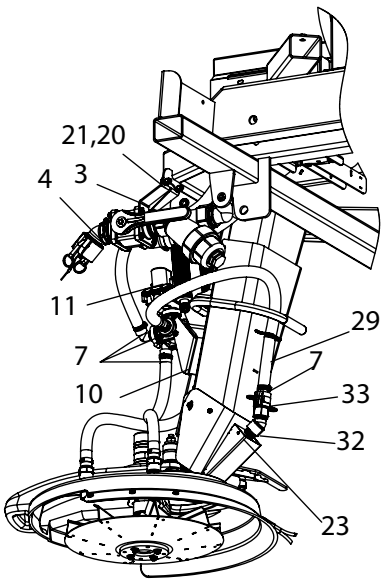

LIQUID DIFFUSER PLUMBING

Liquid Pump System - High Volume Continued

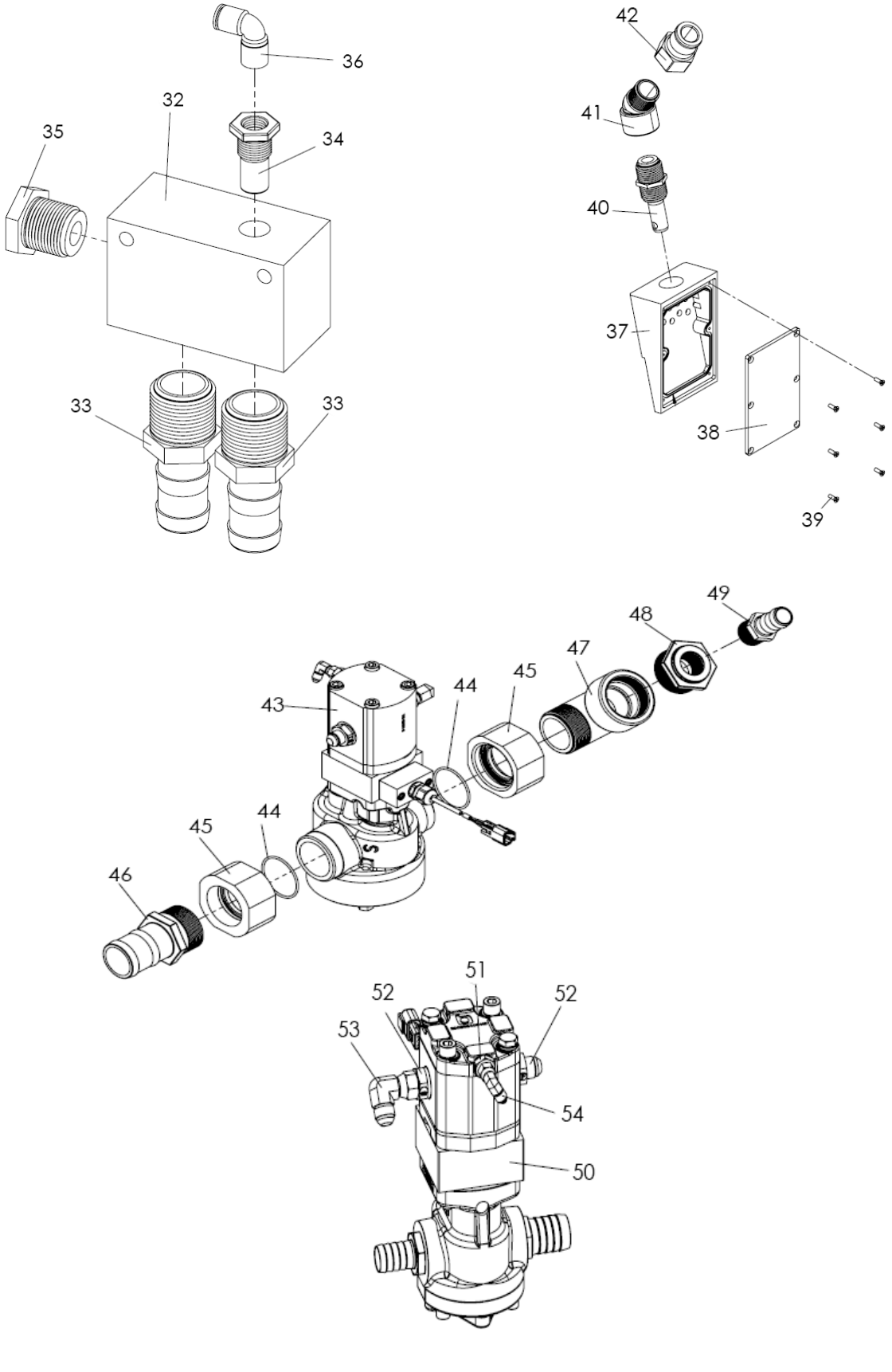

Liquid Pump System - High Volume Continued

ITEM	PART NO.	DESCRIPTION	QTY
1	309939	Pump- Fitting Assy, includes items 43-49	1
2	308011	Manifold- Assy Anti-Siphon, includes item 32-36	1
3	309935	Mount- Valve 304	1
4	309937	Valve- Assy Fill/Pump poly, see ***Fill/Pump Valve Assy High Volume*** parts list	1
5	308033	Clamp- Tubing 1.33 Twin	2
6	308029	Clamp- Hose SAE 36 SS	4
7	308223	Clamp- Hose SAE 16 SS	10
8	9005-0-7761	Tubing- .25 air brake black	1 ft.
9	306836	Wire Tie- 11	1
10	309936	Bracket- Valve 304	1
11	309938	Valve- Assy 3 way motorized Poly, see ***3 Way Valve Assy*** parts list	1
12	309932	Bracket- Wldmt 304	1
13	309926	Fitting- Hose Barb 1.00 HOse x 1.00 FNPT Poly	2
14	308170	Clamp- 2 spiral double bolt	2
15	36421	Washer- Lock .438 SS	3
16	96921	Cap Screw- M10 x 20 SS	3
17	36423	Washer- Flat .25 SS	2
18	34501	Cap Screw- .25-20NC x 2.5 SS	2
19	42034	Nut- Lock .25-20NC SS	2
20	36398	Cap Screw- .375-16NC x 1 SS	2
21	72054	Nut- Lock .375-20NC SS	2
22	307395	Nut- Lock Thin .375-16NC SS	2
23	56315	Screw- Self drilling #6-20NC x .5 SS	2
24	96258	Cap Screw- .313-18NC x 3 SS	2
25	42221	Nut- Lock .313-18NC SS	6
26	36424	Washer- Flat .313 SS	1
27	36397	Cap Screw- .313-18NC x 1.25 SS	1
28	34580	Cap Screw- .313-18NC x 1 SS	1
29	309945	Hose- Group High Volume Liquid, see ***Liquid System Hose Group High Volume*** parts list	1
30	310678	Difusser- Assy, includes items 37-42	1
31	310675	Coupling- 1” female x 1” Hose poly	1
32	307970	Manifold- Anti-Siphon	1
33	307895	Fitting- Hose barb 1” hose x 1” MNPT poly	2
34	308012	Valve- Vacuum breaker .375 NPT SS	1
35	307901	Fitting- Plug .75 NPT hex Head poly	1
36	308222	Fitting- 4-4 630202K	1

Liquid Pump System - High Volume Continued

ITEM	PART NO.	DESCRIPTION	QTY
37	307948	Diffuser	1
38	307949	Cover- Diffuser	1
39	307947	Screw- Self-Tapping #8-15 x .5 SS	6
40	310677	Insert- Assy Diffuser	1
41	310673	Elbow- 90 deg 1” NPT poly	1
42	310674	Adapter- 1” male x 1” female MNPT poly	1
43	309914	Pump- Assy High Liquid, includes items 50-54	1
44	309916	O-Ring- 139	2
45	309915	Adapter- 2.25 BSPPF x 2 NPTF	2
46	308018	Fitting- Hose Barb 2” Hose x 2” MNPT poly	1
47	309921	Fitting- Street Elbow 2.00 NPT 90 deg poly	1
48	309922	Fitting- Bushing 2.00 MNPT x 1.00 FNPT poly	1
49	307895	Fitting- Hose barb 1” Hose x 1” MNPT poly	1
50	309913	Pump- Hyd 95cc gear with DTM04-3P 57”	1
51	308045	Fitting- .25 BSPP male x .25 JIC male	1
52	308044	Fitting- .50 BSPP male x .50 JIC male	2
53	34803	Fitting- 8-8 070221	1
54	34868	Fitting- 4-4 070221	1

Liquid System Hose Group

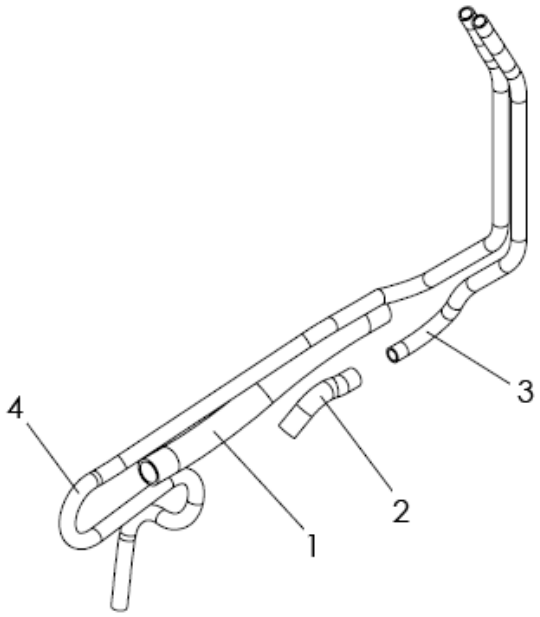

ITEM	PART NO.	DESCRIPTION	QTY
1	307905	Hose- 2” Vaccum/Transfer PVC	26 in.
2	307906	Hose- 1.25 Vaccum/Transfer PVC	9 in.
3	307907	Hose- 1” Vaccum/Transfer PVC	48 in.
4	307909	Hose- 1” EPDM Suction	120 in.

Liquid System Hose Group - High Volume

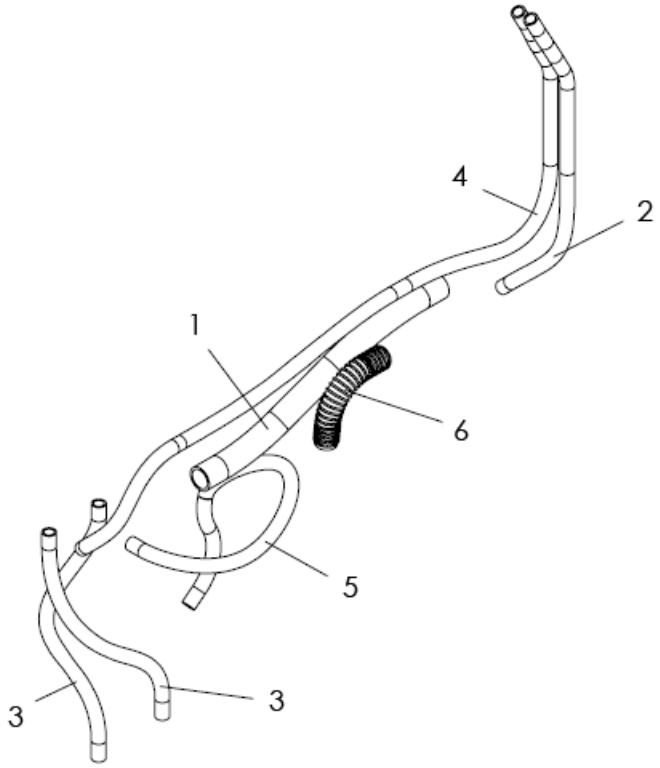

ITEM	PART NO.	DESCRIPTION	QTY
1	307905	Hose- 2” Vaccum/Transfer PVC	31 in.
2	307907	Hose- 1” Vaccum/Transfer PVC	42 in.
3	307907	Hose- 1” Vaccum/Transfer PVC	72 in.
4	307909	Hose- 1” EPDM Suction	100 in.
5	307909	Hose- 1” EPDM Suction	50 in.
6	308169	Hose- 2” PVC	12 in.

Fill/Pump Valve Assy

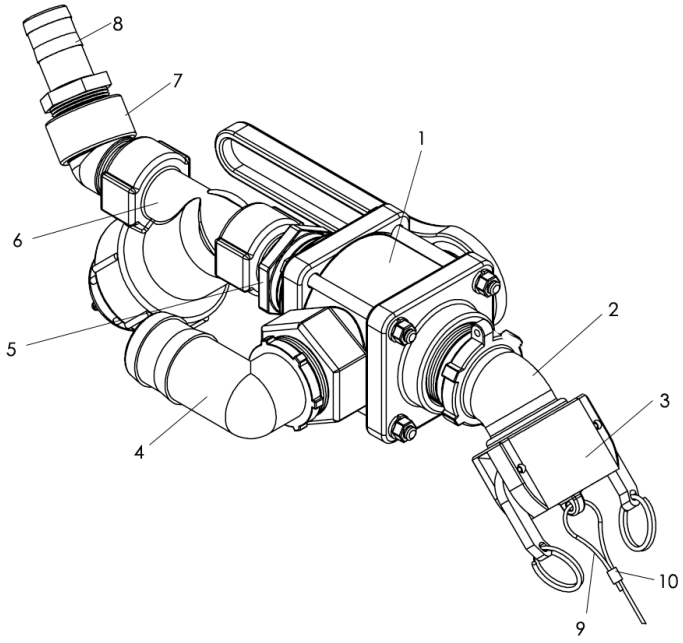

ITEM	PART NO.	DESCRIPTION	QTY
1	307911	Valve- 2” NPT 3-way poly	1
2	307912	Fitting- 2” camlock x 2” MNPT 45 deg	1
3	307913	Dust Cap- 2” camlock poly	1
4	307897	Fitting- Hose barb 90 deg 2” hose x 2” MNPT poly	1
5	307899	Fitting- Nipple reducing 2” NPT x 1.25 NPT poly	1
6	307910	Y Strainer- 1.25 NPT	1
7	308020	Fitting- Street elbow 1.25 NPT 45 deg poly	1
8	307896	Fitting- Hose barb 1.25 ose x 1.25 MNPT poly	1
9	308084	Cable- Coated	1
10	308085	Ferrule	2

Fill/Pump Valve Assy - High Volume

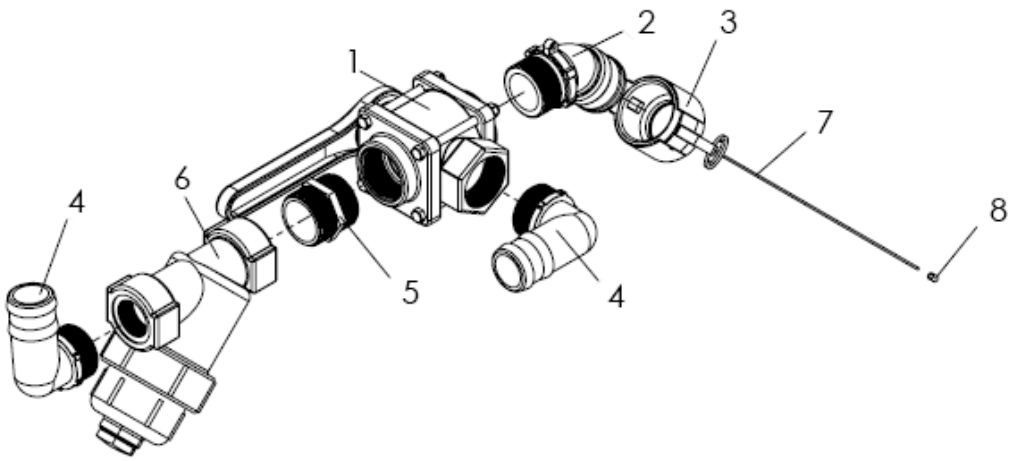

ITEM	PART NO.	DESCRIPTION	QTY
1	307911	Valve- 2” NPT 3-way poly	1
2	307912	Fitting- 2” camlock x 2” MNPT 45 deg	1
3	307913	Dust Cap- 2” camlock poly	1
4	307897	Fitting- Hose Barb 90 deg 2” hose x 2” MNPT poly	2
5	309920	Fitting- Nipple short 2.00 NPT poly	1
6	309919	Y Strainer- 2.00 NPT poly	1
7	308084	Cable- .094 x 24 coated	1
8	308085	Ferrule- .185 x .374	2

3-Way Valve Assy

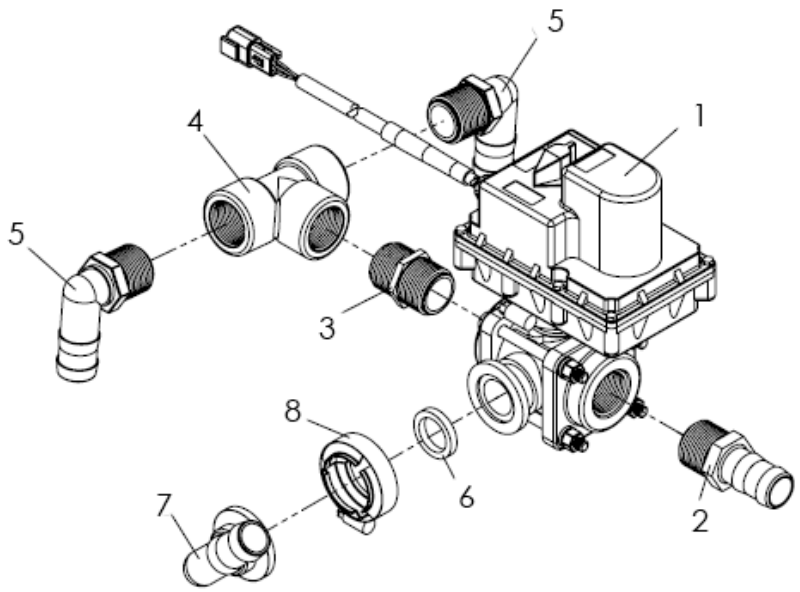

ITEM	PART NO.	DESCRIPTION	QTY
1	309918	Valve- 1” elec 3-Way with DTM04-3P	1
2	307895	Fitting- Hose Barb 1” hose x 1”MNPT poly	1
3	309923	Fitting- Nipple Short 1.00 NPT poly	1
4	309924	Fitting- Tee Poly 1.00 NPT poly	1
5	309925	Fitting- Hose Barb 90 deg 1.00 hose x 1.00 NPT poly	2
6	309929	Gasket- 1.00 flange EPDM	1
7	309927	Fitting- Hose Barb 90 deg 1.00 hose x 1.00 flange poly	1
8	309928	Clamp- Flange 1.00	1

Liquid Tank Group

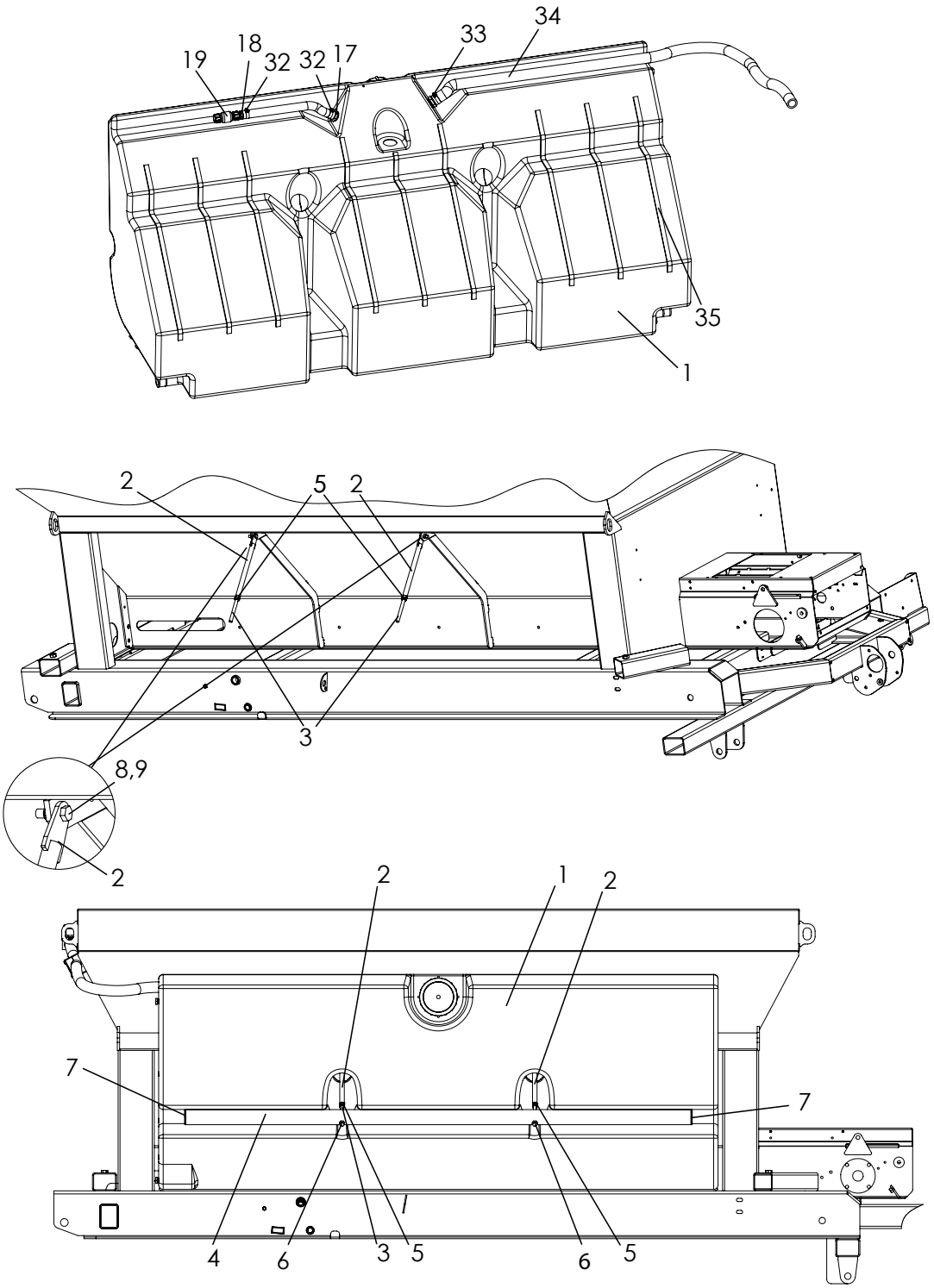

Liquid Tank Group Continued

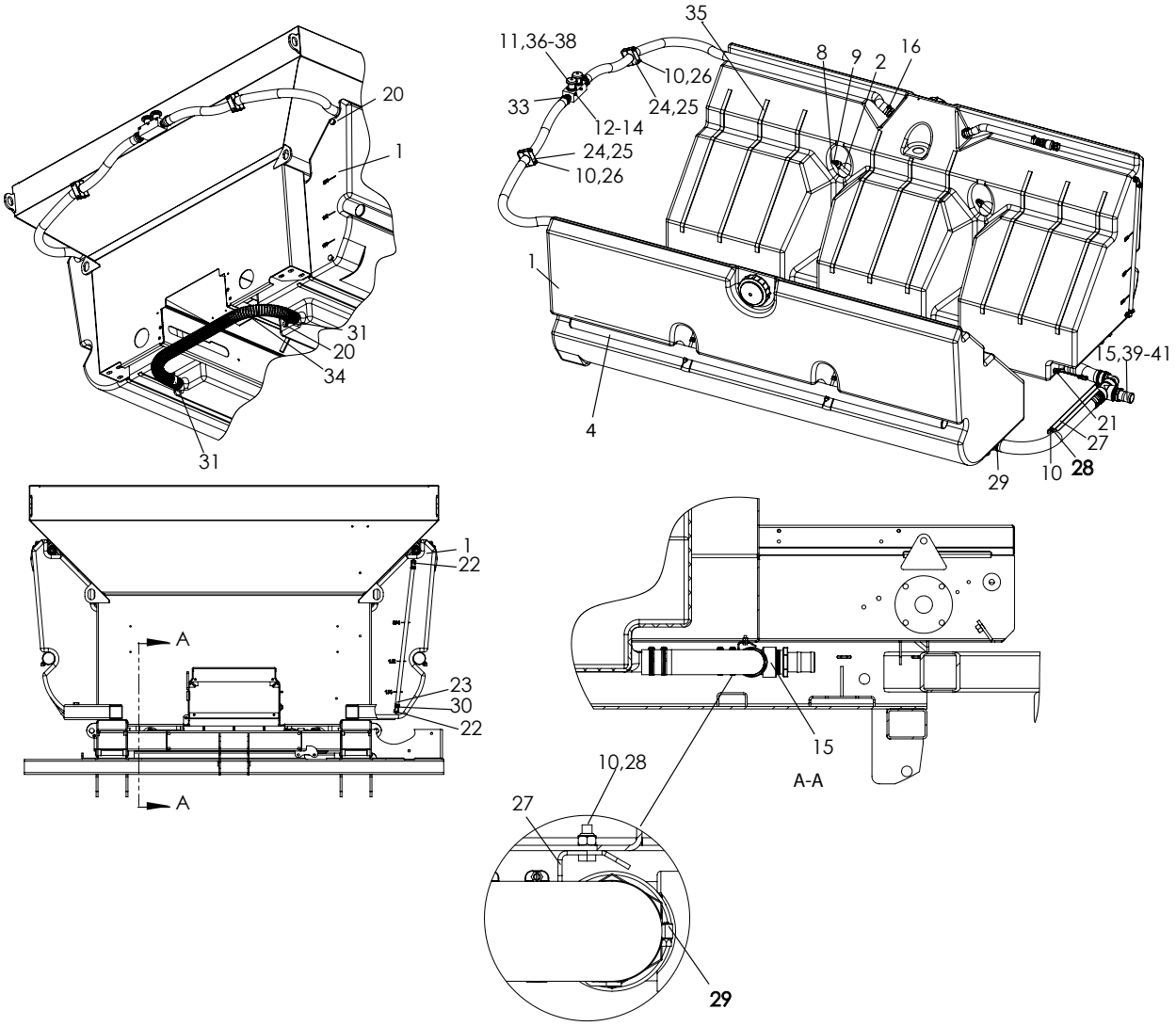

ITEM	PART NO.	DESCRIPTION	QTY
1	307937	Tank- 232 Gal 10’	2
	307938	Tank- 292 Gal 12’	2
	307939	Tank- 350 Gal 14’	2
2	308005	Wldmt- Turn Buckle 304	AR
3	308008	Rod- Threaded .5-13NC x 6 SS	AR
4	308009	Tube- Tank Mount Galvanized (10’)	2
	308316	Tube- Tank Mount Galvanized (12’)	2
	308317	Tube- Tank Mount Galvanized (14’)	2
5	36416	Nut- Hex .5-13NC SS	AR
6	308010	Nut- Acorn .5-13NC SS	AR
	312454	Washer- Formed	AR
7	308024	Plug- Poly 2.5	4

Liquid Tank Group Continued

ITEM	PART NO.	DESCRIPTION	QTY
8	36399	Cap Screw- .375-16NC x 1.25 SS	AR
9	72054	Nut- Lock .375-16NC SS	AR
10	42034	Nut- Lock .25-20NC SS	6
11	308014	Vent- Assy Tank poly, includes items 36-38	1
12	171052	Washer- Flat #10 SS	3
13	44398	Screw- Round Head #10-24NC x 3 SS	3
14	56355	Nut- Lock #10-24NC SS	3
15	308016	Tee- Assy 2” Poly, includes items 39-41	1
16	307896	Fitting- Hose Barb 1.25 hose x 1.25 MNPT poly	2
17	308021	Fitting- Hose Barb 1” hose x 1.25 MNPT poly	2
18	308022	Fitting- Hose Barb 1” hose x .75 MNPT poly	2
19	307922	Valve- Check 5 PSI .75 FNPT PVC	2
20	307902	Fitting- Plug .5 NPT Hex head poly	3
21	308183	Float Switch- .5 MNPT side mtg poly with DT04-2P	1
22	307898	Fitting- Hose barb 90 deg .t hose x .t MNPT poly	2
23	308023	Float- Ball poly	1
24	308165	Clamp Pair- 1.75” Tube	2
25	308164	Plate- Cover Clamp 1.75 OD Tube Hys SS	2
26	56396	Capscrew- .25-20NC x 3.25 SS	4
27	308051	Bracket- Hose 304	1
28	36393	Capscrew- .25-20NC x .75 SS	2
29	308029	Clamp- Hose SAE 36 SS	8
30	308027	Clamp- Hose SAE 8 SS	2
31	308028	Clamp- Hose SAE 24 SS	4
32	308223	Clamp- Hose SAE 16 SS	4
33	308170	Clamp- 2.00 Spiral Double bolt	2
34	308245	Group- Liquid Hose 10’	1
	308318	Group- Liquid Hose 12’	1
	308319	Group- Liquid Hose 14’	1
35	84280	Strip- Rubber	AR
36	307971	Manfold- Vent	1
37	307904	Vent- Labyrinth Air poly	2
38	308015	Fitting- Hose barb 1.25 x hose x 1” MNPT poly	2
39	308017	Fitting- TEE 2” FNPT poly	1
40	308018	Fitting- Hose barb 2” Hose x 2” MNPT poly	2
41	307897	Fitting- Hose barb 90 deg 2” hose x 2” MNPT poly	1

Liquid Tank Hose Group

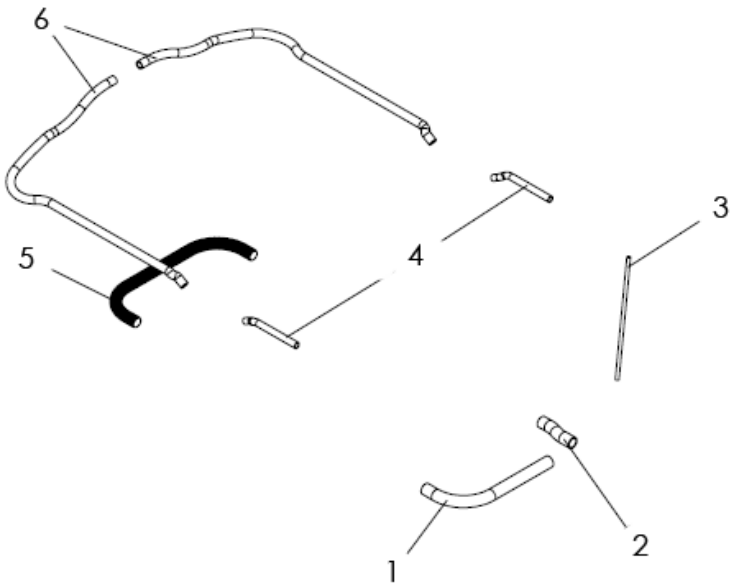

ITEM	PART NO.	DESCRIPTION	QTY
1	307905	Hose- 2” Vaccum/Transfer PVC	31.5 in.
2	307905	Hose- 2” Vaccum/Transfer PVC	9.8 in.
3	307908	Hose- .5” Clear PVC sight	29 in.
4	307907	Hose- 1” Vaccum/Transfer PVC	32.6 in.
5	308169	Hose- 2” Vaccum/Transfer PVC	48 in.
6	307906	Hose- 1.25” Vaccum/Transfer PVC (10’ unit)	170 in.
	307906	Hose- 1.25” Vaccum/Transfer PVC (12’ unit)	194 in.
	307906	Hose- 1.25” Vaccum/Transfer PVC (14’ unit)	218 in.

Metering Gate Assy

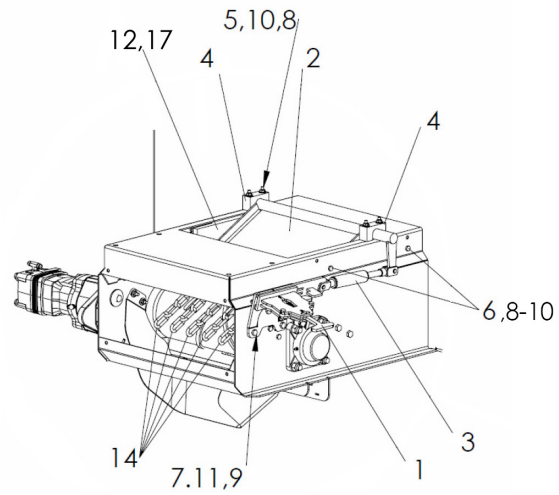

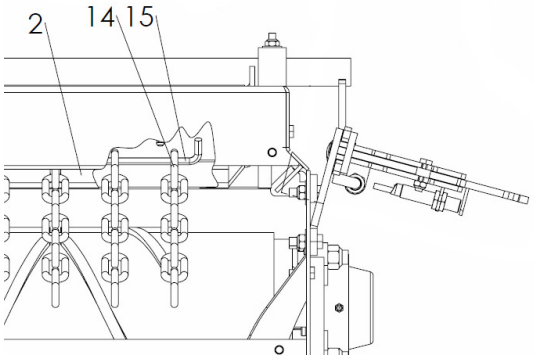

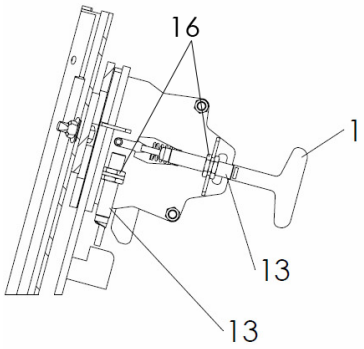

ITEM	PART NO.	DESCRIPTION	QTY
1	308094	Mechanism- Assy metering gate 304 * parts list on other page	1
2	308108	Gate- Wldmt Metering 304	1
3	308113	Spring- Gas	1
4	308116	Pivot- Bearing	2
5	308112	Cap Screw- .25-20NC x 2 SS	4
6	36395	Cap Screw- .25-20NC x 1 SS	4
7	34580	Cap Screw- .313-18NC x 1 SS	3
8	36423	Washer- Flat .25 SS	8
9	36424	Washer- Flat .313 SS	3
10	42034	Nut- Lock .25-20NC SS	8
11	42221	Nut- Lock .313-18NC SS	3
12	310670	Guide- Metering Gate RH	1
13	308175	Sensor- 12mm	2
14	308114	Chain- Straight link coil 5/0 9LK	5
15	308115	Bar- Retainer 304	1
16	308236	Washer- Star Internal	4
17	310671	Guide- Metering Gate LH	1

Metering Gate Mechanism

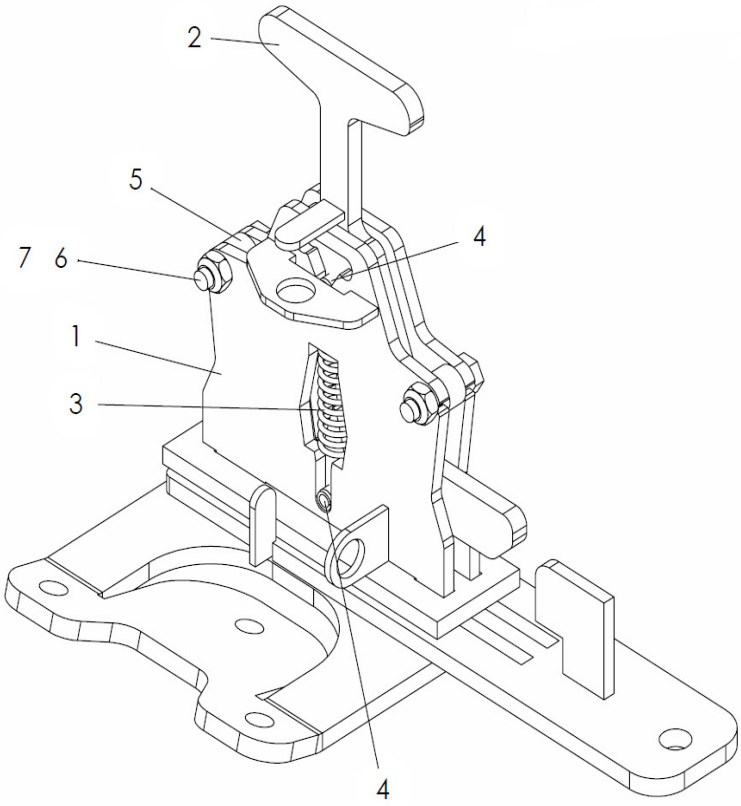

ITEM	PART NO.	DESCRIPTION	QTY
1	308098	Plate- Wldmt metering gate mech 304	1
2	308095	Bolt- Wldmt metering gate 304	1
3	308081	Spring SS	1
4	308082	Pin- Roll . 25 x .625 SS	2
5	308107	Spacer- .281 ID x .290 304	2
6	40750	Cap Screw- .25-20NC x 1.25 SS	2
7	42034	Nut- Lock .25-20NC SS	2

Electronics System Enclosure Group

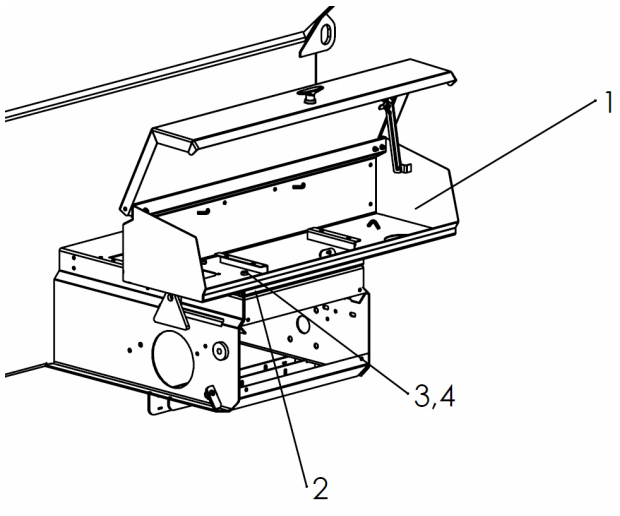

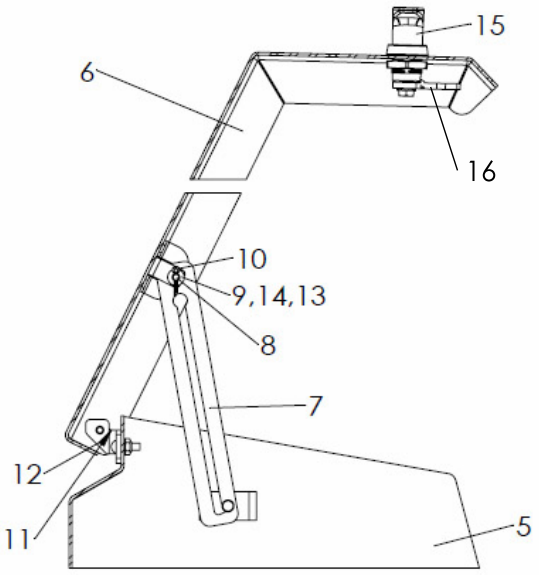

ITEM	PART NO.	DESCRIPTION	QTY
1	308130	Enclosure- Assembly includes items 5-17	1
2	308171	Mount- Enclosure 304	2
3	36293	Cap Screw- .375-16NC x .75 SS	8
4	72054	Nut- Lock .375-16NC SS	8
5	308131	Enclosure- Wldmt base 304	1
6	308138	Enclosure- Wldmt lid 304	1
7	308142	Stop- Lid 304	1
8	308137	Pin- Clevis .188 x .625 SS	1
9	171052	Washer- Flat #10 SS	5
10	76822	Pin- Cotter .094 x .5 SS	1
11	308141-AA	Hinge- LH 304	1
12	308141-AB	Hinge- RH 304	1
13	44453	Screw- Round head #10-24NC x .625 SS	4
14	56355	Nut- Lock #10-24NC SS	4
15	308144	Latch- Cam E5	1
16	308145	Hook- Cam E5	1
17	*308120	Seal- Strip	8.33’

*-- not shown

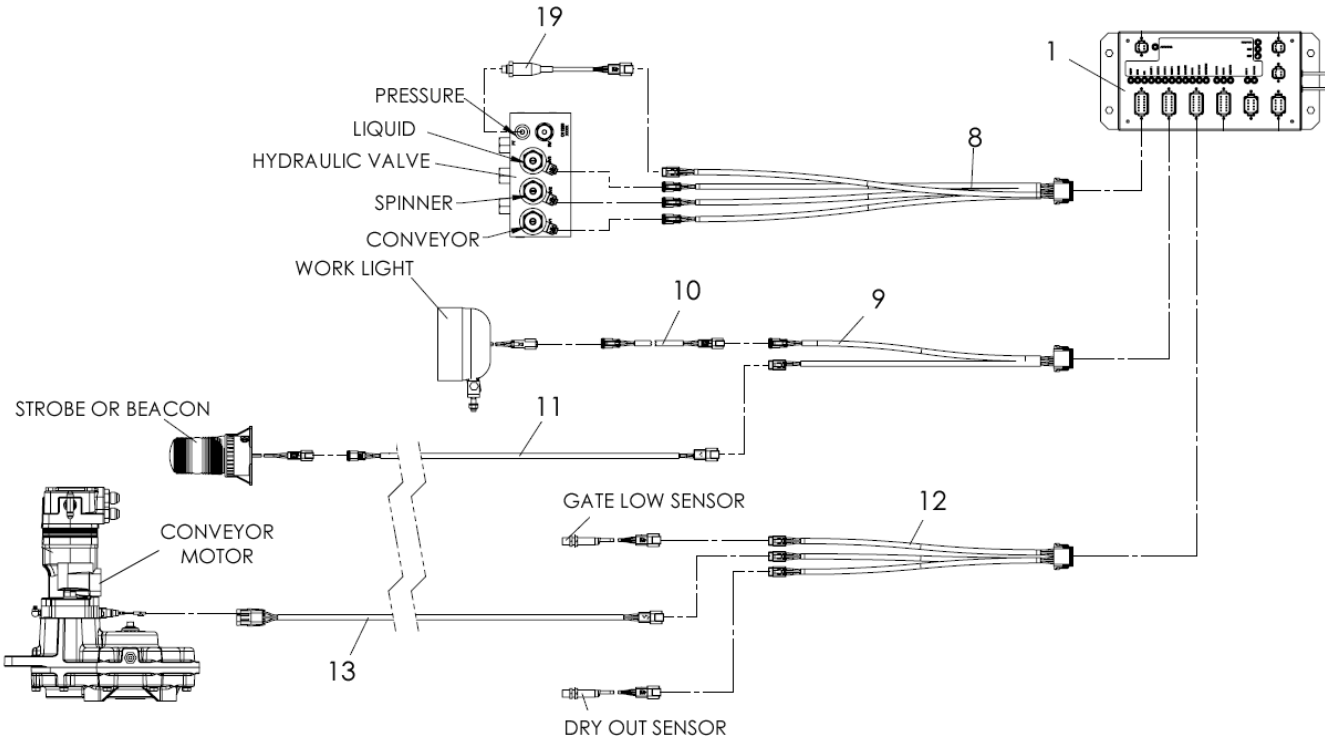
19
1
PRESSURE
LIQUID
HYDRAULIC VALVE
SPINNER
CONVEYOR
8
WORK LIGHT
10
9
STROBE OR BEACON
11
GATE LOW SENSOR
12
CONVEYOR
MOTOR
13
DRY OUT SENSOR

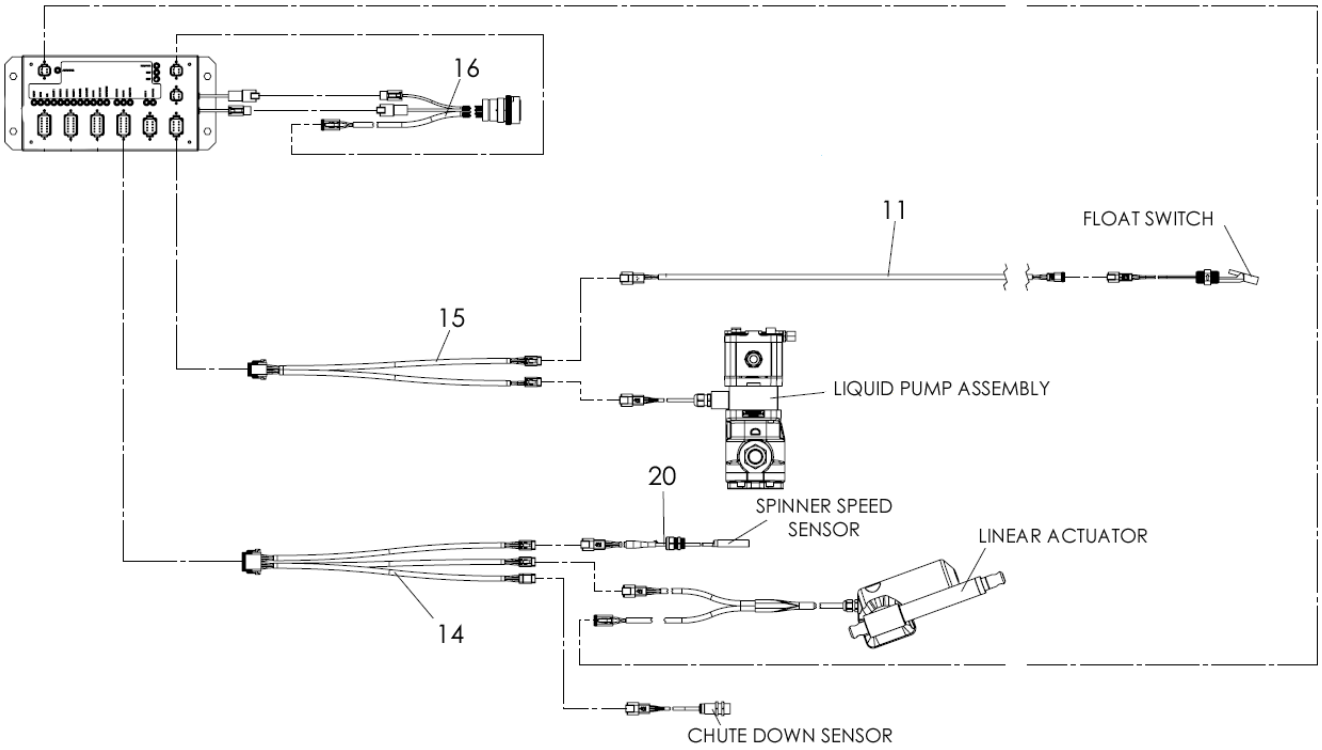
16
11
FLOAT SWITCH
15
LIQUID PUMP ASSEMBLY
20
SPINNER SPEED
SENSOR
LINEAR ACTUATOR
14
CHUTE DOWN SENSOR

Controller Continued

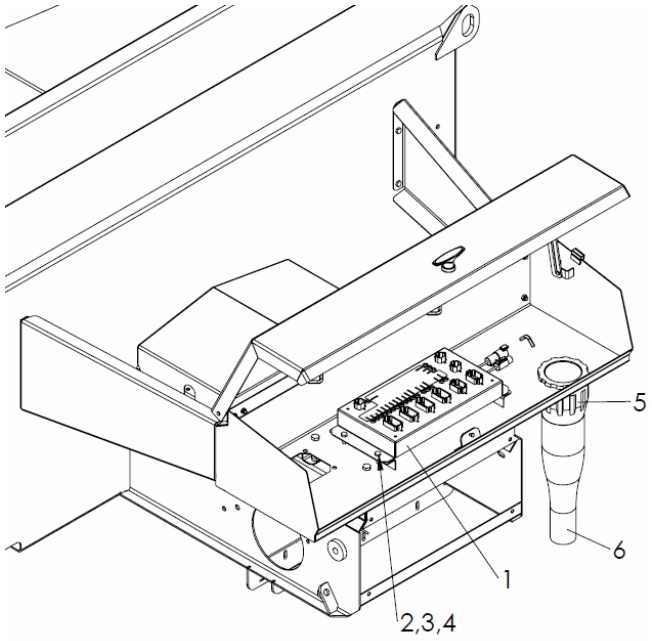

ITEM	PART NO.	DESCRIPTION	QTY
1	308143	Module	1
2	36393	Cap Screw- .25-20NC x .75 SS	4
3	36423	Washer- Flat .25 SS	4
4	42034	Nut- Lock .25-20NC SS	4
5	308121	Seal	1
6	308220	Abrasion Sleeve	1.2 ft
7	*4307	Clamp- Tubing .375	1
8	308172	Harness	1
9	308185	Harness	1
10	308186	Harness	1
11	308182	Harness	2
12	308173	Harness	1
13	308174	Harness	1
14	308176	Harness	1
15	308180	Harness	1
16	308184	Harness	1
17	*73926	Conduit- Flexible	5.5 ft
18	*308219	Conduit- Flexible	7.5 ft
19	308230	Transducer- Pressure	1
20	58728	Conduit- Corrugated	3.5 ft
21	*312708	Cable- ISOBUS Extension 12 ft	1

*- Not Shown

Control Panel Group

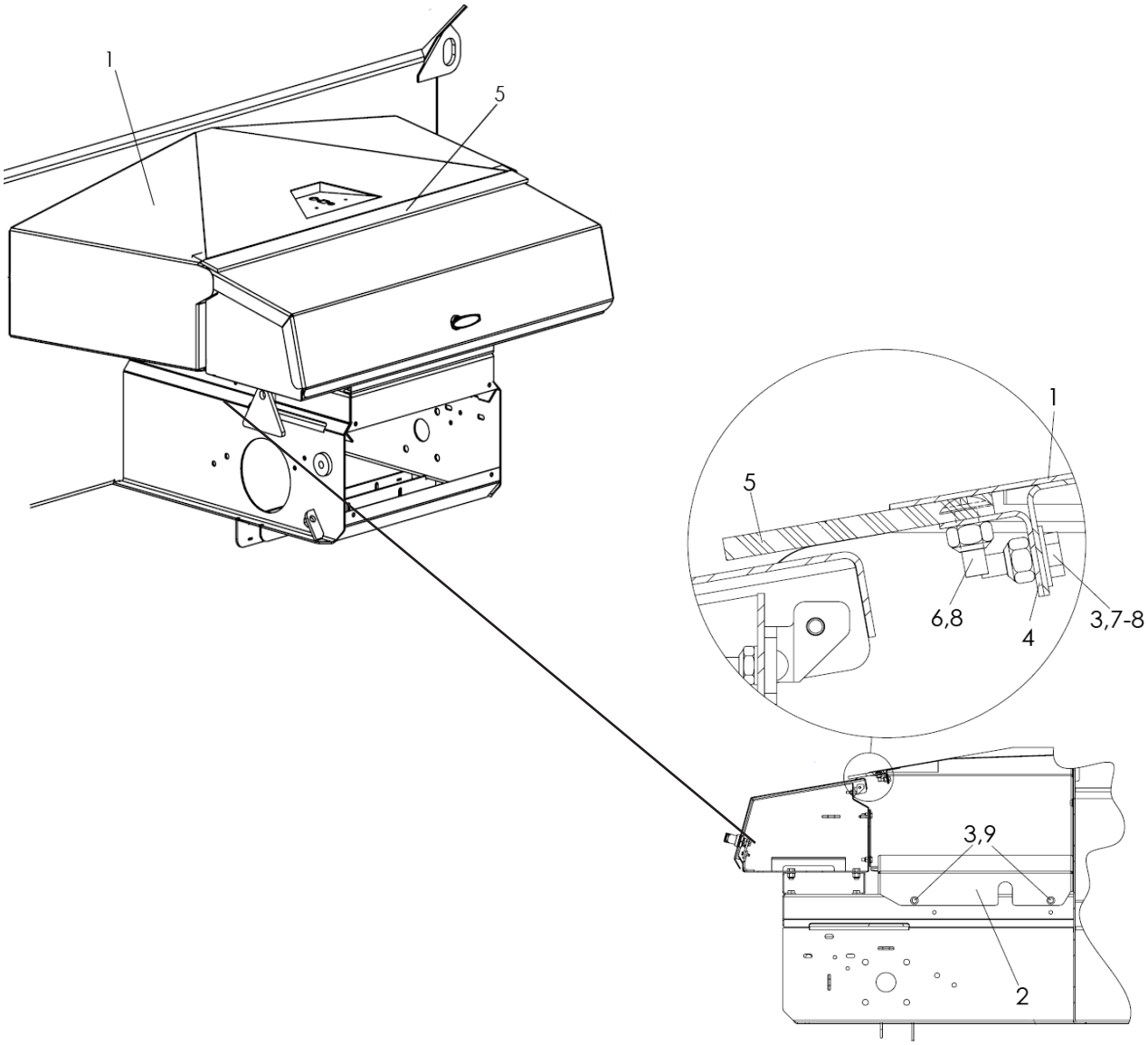

ITEM	PART NO.	DESCRIPTION	QTY
1	308299	Cover- Wldmt Rear 304	1
2	308117	Cover- Metering Gate 304	1
3	36423	Washer- Flat .25 SS	16
4	308304	Angle 304	1
5	53251	Belt- .25 x 3 skirtboard	3 ft.
6	32446	Screw- Truss Head .25-20NC x .75 SS	7
7	36393	Cap Screw- .25-20NC x .75 SS	12
8	42034	Nut- lock .25-20NC SS	19
9	58799	Cap Screw- .25-20NC x .5 SS	4

This page is intentionally left blank.

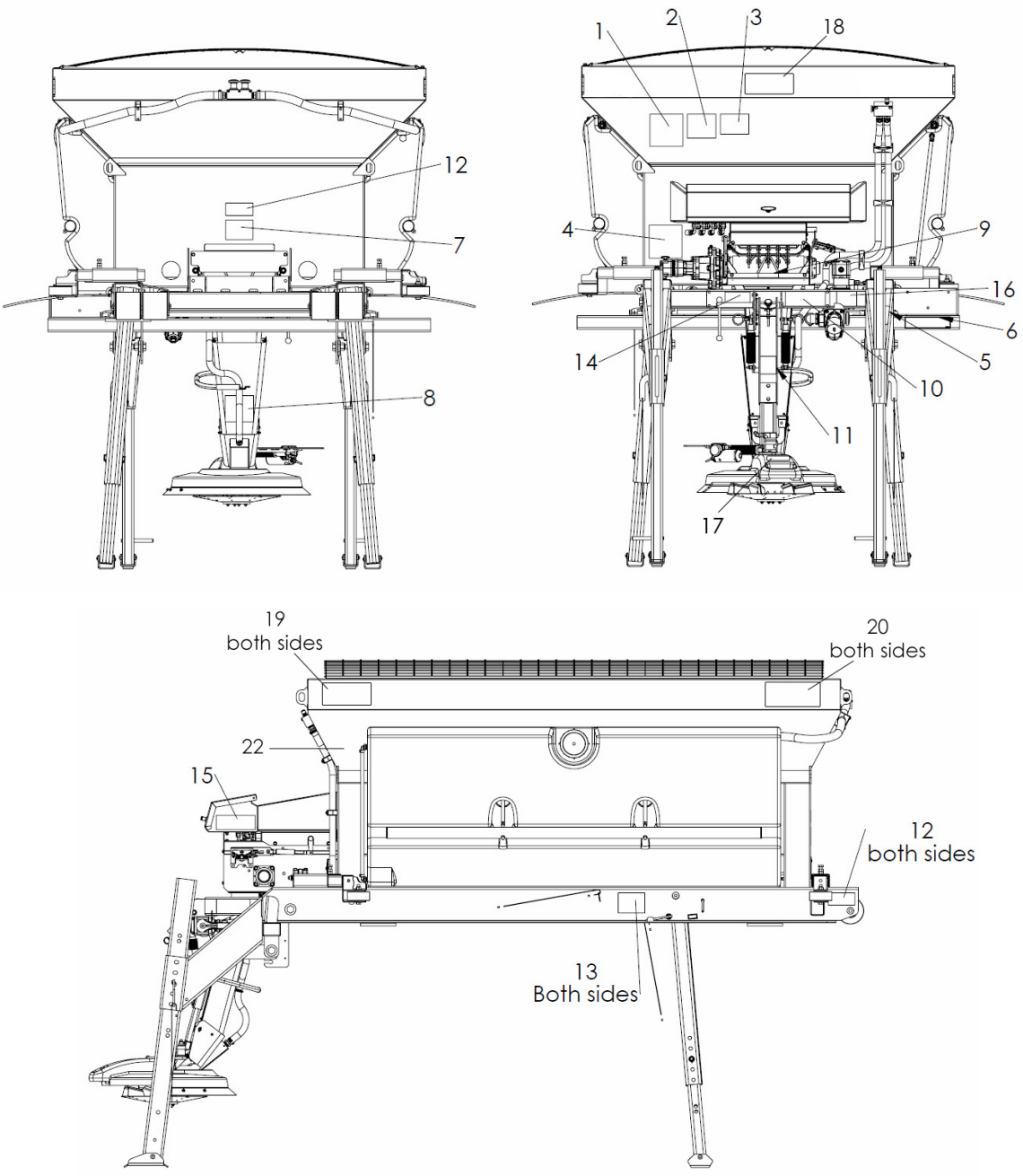
1
2
3
18
12
7
4
9
16
6
5
14
10
11
17
8
19
both sides
20
both sides
22
15
12
both sides
13
Both sides

Decals Continued

ITEM	PART NO.	DESCRIPTION	QTY
1	150034	Decal- Caution Operation & Maint	1
2	364	Decal- Danger Moving Part	1
3	321	Decal- Caution Hazardous Material	1
4	39138	Decal- Warning High Pressure Fluid	1
5	39017	Decal- No Step	2
6	305274	Decal- Falling Hazard	1
7	55631	Decal- Warning Moving Part Hazard	1
8	71807	Decal- Warning Falling Spinner Hazard	1
9	308191	Decal- Guard is Missing	1
10	308192	Decal- Flying Material	1
11	308193	Decal- Falling Hazard	1
12	308194	Decal- Crushing Hazard	3
13	308195	Decal- Lock Leg (units equipped with storage legs)	2
14	308196	Decal- Read Manual	1
15	308197	Decal- Metering Gate Positions	1
16	308198	Decal- Liquid Valve Positions	1
17	308199	Decal- No Step	1
18	308306	Decal- HiWay/Xzalt	1
19	39870	Decal- HiWay Large	2
20	308305	Decal- Xzalt	2
21	*39200	Decal- Warning Slipping Hazard (Fenders)	2
22	315865	Decal - Warning, Prop 65	1

* – Not Shown

NOTE: See “Safety Decals” in Safety section of operator’s manual for details.

Hydraulic System

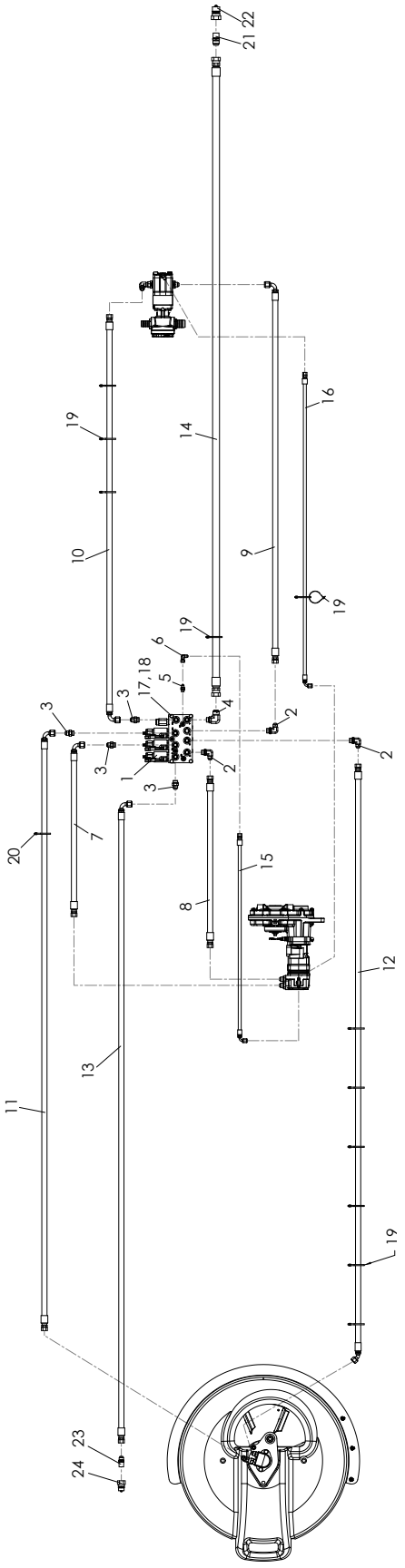

Hydraulics Continued

ITEM	PART NO.	DESCRIPTION	QTY
1	307941	Valve- Hydraulic	1
2	34822	Fitting- 8-8 070220	3
3	29770	Fitting- 8-8 070120	4
4	308211	Fitting- 12-8 070220	1
5	29849	Fitting- 4-4 070120	1
6	34868	Fitting- 4-4 070221	1
7	308200	Hose- Assy .5 x 29 100	1
8	308201	Hose- Assy .5 x 29 100	1
9	308202	Hose- Assy .5 x 64 100	1
10	308203	Hose- Assy .5 x 68.5 100	1
11	308204	Hose- Assy .5 x 101 100	1
12	308205	Hose- Assy .5 x 101 100	1
13	308206	Hose- Assy .5 x 108 100	1
14	308207	Hose- Assy .75 x 108 100	1
15	308208	Hose- Assy .25 x 31 100	1
16	308209	Hose- Assy .25 x 53 100	1
17	308212	Cap Screw- .313-18NC x .5 SS	4
18	36419	Washer- Lock .313 SS	4
19	99674	TIE- WIRE	12
20	306836	WIRE TIE- 11	1
21	29752	FITTING- 12-12 070102	1
22	39905	DISCONNECT- QUICK MALE	1
23	29767	FITTING- 8-8 070102	1
24	40008	DISCONNECT- QUICK MALE	1

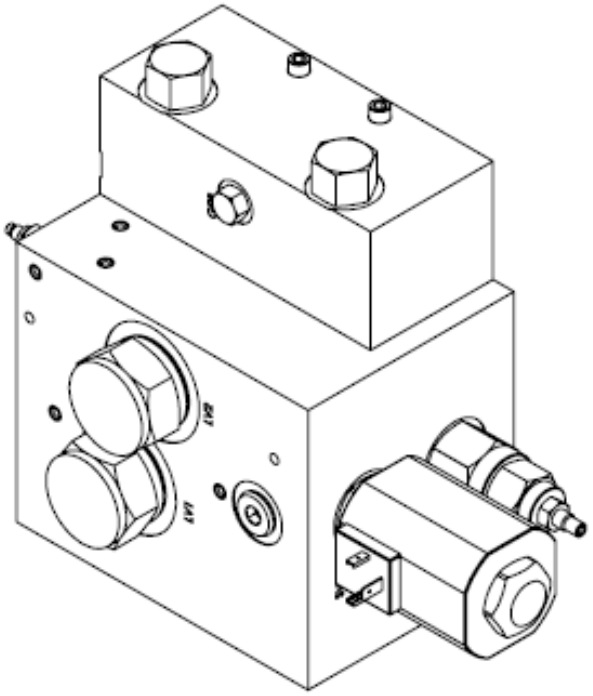

ITEM	PART NO.	DESCRIPTION	QTY
1	308366	Valve- Hydraulic Flow Control	1