NL5000 G5 Crop Nutrient Applicator

Precision Application

- 16-section swath width control
- ½ width spreading
- Last Pass Control
- Boundary spreading
- Precise independent spinner control and monitoring
- Automatic feedgate and fan frame control

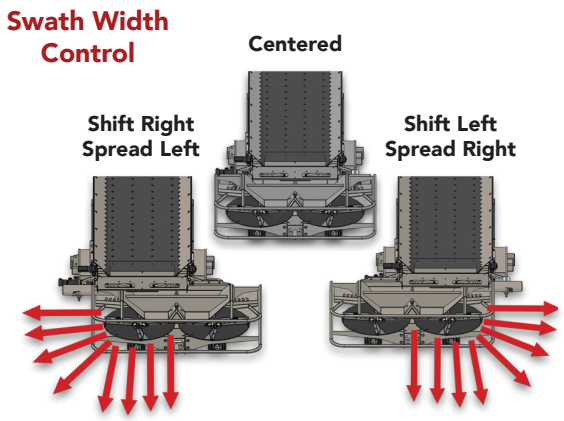

Ease of Use

- Intuitive New Leader user interface with up to 25 stored product profiles
- System sensors to monitor spreader performance
- Product output sensors
- Feedgate optimizer with automatic adjustment

Ease of Maintenance

- Centralized grease banks
- Automatic chain tensioner
- Automatic chain oiling routine and alarms
- 304 stainless steel cross tubes, mounts, and take-up brackets
- Diagnostic feedback

Multi-Product Capabilities

- MultApplier: Two product, variable rate spreading
  - Enhanced feedgate design for higher outputs
  - Stainless steel connections for easy removal
- MultiBin: Four product, variable rate spreading
  - Stainless steel connections for easy removal
  - Optional MicroBin Top Cover

NL5000 G5 Specifications

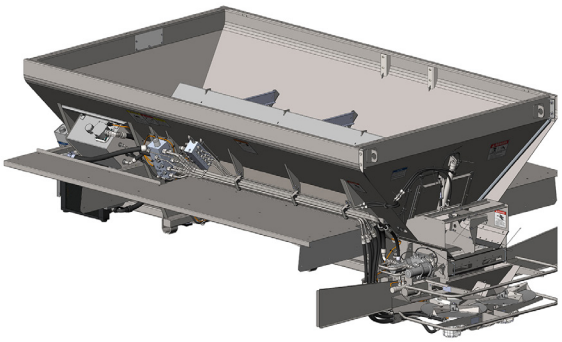

NL5000 G5	
Length	in (cm)
14' (4.27m)	200 (508)
Struck Capacity	Cu Ft (Cu M)
14' (4.27m)	298 (8.44)
Estimated Weight	lbs (kg)
14' (4.27m)	5100 (2313)

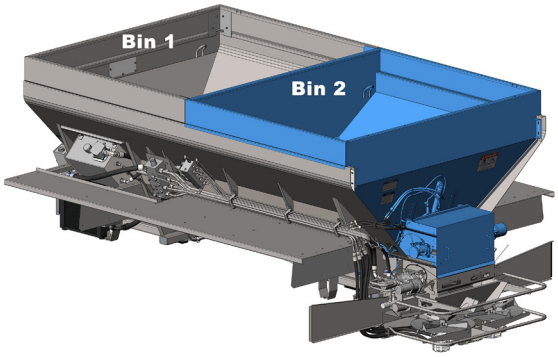

MultApplier	5ft MultApplier	7ft MultApplier
Est. Ship Weight	1200 (544 kg)	1400 (635 kg)
	Capacities with 5 ft. MultApplier Cu ft (Cu M)	Capacities with 7 ft. MultApplier Cu ft (Cu M)
Insert Capacity	115 (3.25)	161 (4.60)
14' (4.27m) Bin 1 Struck Capacity	253 (7.16)	195 (5.52)
14' (4.27m) Bin Total Struck Capacity	368 (10.42)	356 (10.08)

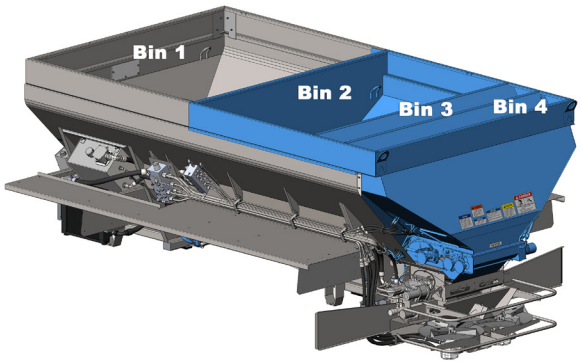

MultiBin - sideboard included	
Struck Capacity	Cu Ft (Cu M)
14' NL5000 w/ MultiBin - Bin 1	195 (5.52)
MultiBin - Bin 2	143 (4.05)
MultiBin - Bin 3	23 (.65)
MultiBin - Bin 4	21 (.59)
Total Capacity	382 (10.81)

MultiBin - Sideboard included	
14' Unit - Bin 1 Length w/ MultiBin (B)	84 in (213cm)
Est. Ship Weight	1800 (816kg)

nutrient stewardship

Products and specifications subject to change without notice.
Photos and illustrations may or may not include optional equipment.
New Leader is a registered trademark of Highway Equipment Company, Inc., d/b/a New Leader Manufacturing.
© 2019 Highway Equipment Company, Inc., d/b/a New Leader Manufacturing.
CASE-NL5000-2019-01