# Hi-Way T6034
# Operator's Manual
# & Parts List

**UNIT SERIAL NUMBER _____**

**MANUAL NUMBER: 300121-H**

**EFFECTIVE 04/2017**

**Highway Equipment Company**

*Building the best since 1939.*

**1330 76TH AVE SW**
**CEDAR RAPIDS, IA 52404-7052**
**PHONE (800) 363-1771 | FAX (319) 286-3350**
***www.Hi-WaySpreader.com***

Copyright 2006 Highway Equipment Company, Inc.

# Table of Contents


Interactive Features ..... 4
Warranty ..... 6
Preface ..... 7
Safety ..... 8
- Important Safety Information ..... 8
- Safety Alert Symbols ..... 8

General Safety Rules ..... 9
Safety Decals ..... 19
- Installation ..... 24

General Description ..... 25
Dimensions & Capacities ..... 26
Initial Startup ..... 27
General Operating Procedures ..... 28
Weights of Various Materials ..... 29
Lubrication & Maintenance ..... 30
- Preventative Maintenance Pays! ..... 30
- Hydraulic System ..... 30
- Hydraulic Hose ..... 31
- Conveyor Chain ..... 31
- Gearcase Lubricant ..... 33
- #4 BOC Conveyor Belt Maintenance ..... 34
- Conveyor Gearcase ..... 35
- Lubrication of Bearings ..... 35
- Fasteners ..... 35
- Clean-Up ..... 35

Lubricant & Oil Specifications ..... 36
- Hydraulic System ..... 36
- Grease Gun Lubricant ..... 36
- Conveyor Chain Oiler ..... 36

Lubrication & Maintenance Chart ..... 37
Troubleshooting ..... 38
- Hydraulic Schematic ..... 38
- Electrical Schematic ..... 39
- Controls Interface ..... 40

Standard Torques ..... 41

## Table of Contents

Instructions for Ordering Parts ..... 43
Body ..... 44
- Mounting ..... 44
- Hinge ..... 45
- Fenders ..... 46
- Mud Flaps ..... 48
- Straight Ladder ..... 49
- Folding Ladder ..... 50
- Tarp ..... 52
- Skins & Insulation ..... 54
- Emergency Stop Switch ..... 56
- Lighting ..... 58

Endgate ..... 60
- Hydraulic Endgate ..... 60
- Internal Endgate ..... 62

Conveyor ..... 63
- #4 Belt-Over-Chain Conveyor ..... 63
- Conveyor Drive ..... 64
- Conveyor Idler ..... 66
- Conveyor Chain Oiler ..... 67
- Chain Shields ..... 68
- Remote Grease Zerks ..... 70
- Wiper - Front ..... 71
- Scraper - Rear & Cover ..... 72

Hydraulics ..... 74
- Body Hydraulics ..... 74
- Hydraulic Control Valve ..... 76
- Hydraulic Hoses ..... 78
- Body Side Tubes ..... 80

Decals ..... 82

# Interactive Features

| | |
|---|---|
| **NOTE:** | This manual incorporates several interactive features to provide supplemental information and ease of navigation. The information below is to aid in the identification and use of these features. |

**Hyperlinks**

Hyperlinks provide direct access to a specific destination when clicked. The entire Table of Contents of this manual is hyperlinked to provide quick access to all sections of this manual when viewing the electronic version.

Hyperlinks within the content are denoted by **blue, bold underlined text**. Electronic format viewers can click these links for direct access to New Leader online features. Internet access is required.

**Quick Reference (QR) Codes**

Quick reference codes provide direct access to a specific destination when activated. An example is provided below. In the printed version of this manual, viewers may scan the codes with a supporting mobile device for direct access to New Leader online features. Mobile data is required.

The electronic version of this manual provides the option to scan codes on-screen, or to click the code like a button. Internet access/mobile data is required.

**Click or Scan - Highwayequipment.com**

This page is intentionally left blank.

# Insert Current Hi-Way Warranty

# PLEASE ! ALWAYS THINK SAFETY FIRST !!

The purpose of this manual is to familiarize the person (or persons) using this unit with the information necessary to properly install, operate, and maintain this system. The safety instructions indicated by the safety alert symbol in the following pages supersede the general safety rules. These instructions cannot replace the following: the fundamental knowledge that must be possessed by the installer or operator, the knowledge of a qualified person, or the clear thinking necessary to install and operate this equipment. Since the life of any machine depends largely upon the care it is given, we require that this manual be read thoroughly and referred to frequently. If for any reason you do not understand the instructions, please call your authorized dealer or our Product Sales and Support Department at 1-888-363-8006.

It has been our experience that by following these installation instructions, and by observing the operation of the spreader, you will have sufficient understanding of the machine enabling you to troubleshoot and correct all normal problems that you may encounter. Again, we urge you to call your authorized dealer or our Product Sales and Support Department if you find the unit is not operating properly, or if you are having trouble with repairs, installation, or removal of this unit.

We urge you to protect your investment by using genuine HECO parts and our authorized dealers for all work other than routine care and adjustments.

Highway Equipment Company reserves the right to make alterations or modifications to this equipment at any time. The manufacturer shall not be obligated to make such changes to machines already in the field.

This Safety Section should be read thoroughly and referred to frequently.

**ACCIDENTS HURT !!!**

**ACCIDENTS COST !!!**

**ACCIDENTS CAN BE AVOIDED !!!**

## IMPORTANT SAFETY INFORMATION

Figure 1.1 - The need for safety cannot be stressed strongly enough in this manual. At Highway Equipment Company, we urge you to make safety your top priority when operating any equipment. We firmly advise that anyone allowed to operate this machine carefully read, learn and understand all messages and information in this manual and on machine's safety decals before operating machine, as well as familiarize themselves with the location and function of all machine controls.

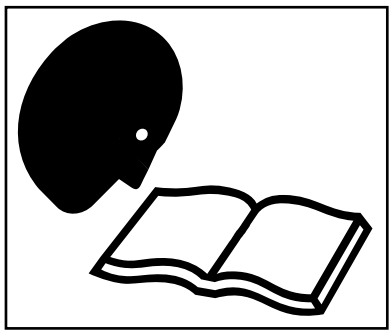

**Figure 1.1**

The following guidelines are intended to cover general usage and to assist you in avoiding accidents. There will be times when you will run into situations that are not covered in this section. At those times the best standard to use is common sense. If, at any time, you have a question concerning these guidelines, please call your authorized dealer or our Product Sales & Support Department at (800) 363-1771.

## SAFETY ALERT SYMBOLS

TAKE NOTE! THIS SAFETY ALERT SYMBOL FOUND THROUGHOUT THIS MANUAL IS USED TO CALL YOUR ATTENTION TO INSTRUCTIONS INVOLVING YOUR PERSONAL SAFETY AND THAT OF OTHERS. FAILURE TO FOLLOW THESE INSTRUCTIONS CAN RESULT IN INJURY OR DEATH.

In this manual and on the safety signs placed on the unit, the words "DANGER," "WARNING," "CAUTION," and "NOTICE" are used to indicate the following:

| | |
|---|---|
| **DANGER** | **Indicates an imminently hazardous situation that, if not avoided, WILL result in death or serious injury. This signal word is to be limited to the most extreme situations and typically for machine components that, for functional purposes, cannot be guarded.** |
| **WARNING** | **Indicates a potentially hazardous situation that, if not avoided, COULD result in death or serious injury, and includes hazards that are exposed when guards are removed. It may also be used to alert against unsafe practices.** |
| **CAUTION** | **Indicates a potentially hazardous situation that, if not avoided, MAY result in minor or moderate injury. It may also be used to alert against unsafe practices.** |
| **NOTICE!** | **Is used for informational purposes in areas which may involve damage or deterioration to equipment but generally would not involve the potential for personal injury.** |
| NOTE: | **Provides additional information to simplify a procedure or clarify a process.** |

**PREPARE FOR EMERGENCIES**

Figure 1.2 - Be prepared if a fire starts. Keep a fully charged fire extinguisher and first aid kit in accessible place on the vehicle at all times.

Fire extinguisher must be Type ABC or Type BC.

Keep emergency numbers for doctors, ambulance service, hospital and fire department available at all times.

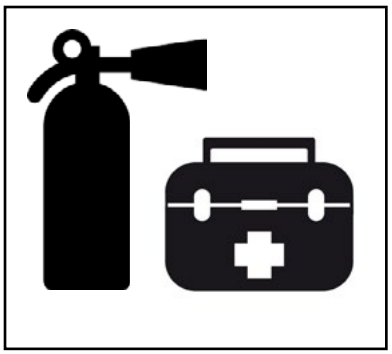

**Figure 1.2**

**INSPECT HARDWARE BEFORE USE**

Figure 1.3 - Inspect all bolts, screws, fasteners, keys, chain drives, body mounts and other attachments periodically. Immediately replace any missing or damaged parts immediately with proper specification parts.

Inspect spinner fins, spinner frame mounting and spinner fin hardware daily. Look for missing or loose fasteners, wear and cracks. Replace immediately if needed. Use only new SAE grade 5 or grade 8 screws and self-locking nuts.

Tighten all bolts, nuts and screws to specified torques. Refer to “Standard Torques” in Maintenance section of this manual.

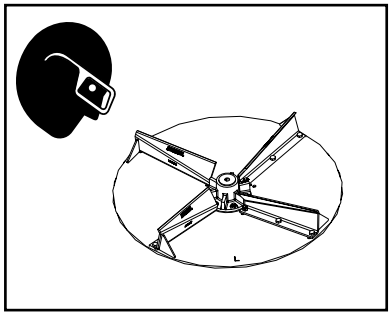

**Figure 1.3**

**HANDLE FLAMMABLE MATERIALS SAFELY**

Figure 1.4 - Handle fuel and hydraulic oil with care. They are highly flammable.

Always stop the engine before refueling machine or filling hydraulic reservoir.

Never smoke while adding fuel or oil to machine. Add fluids in a safe place away from open flame and sparks.

Do not allow overflow. Clean up spilled fuel and oil immediately.

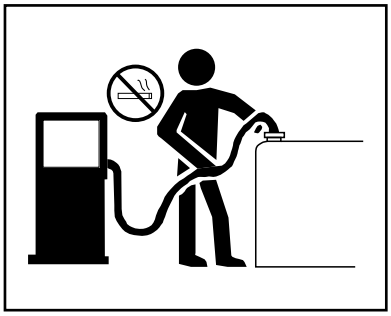

**Figure 1.4**

Always have a multipurpose dry chemical fire extinguisher filled and available during machine operation and when adding fuel. Know how to use it.

**HANDLE HAZARDOUS MATERIALS SAFELY**

Figure 1.5 - Materials to spread can be dangerous.

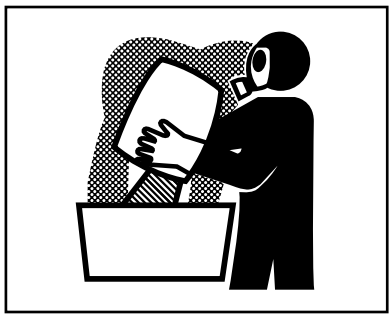

**Figure 1.5**

Improper selection, application, use or handling may be a hazard to persons, animals, plants, crops or other property.

A Safety Data Sheet (SDS) provides specific details on chemical products: physical and health hazards, safety procedures and emergency response techniques.

Check the SDS before starting any job using a hazardous material. Follow all instructions and precautions given by the material manufacturer.

**WORK IN WELL-VENTILATED AREAS**

| | |
|---|---|
| **WARNING** | Never run machine engine inside a building unless adequate ventilation is provided to safely and properly remove exhaust fumes. |

Figure 1.6 - Always work in a properly ventilated area.

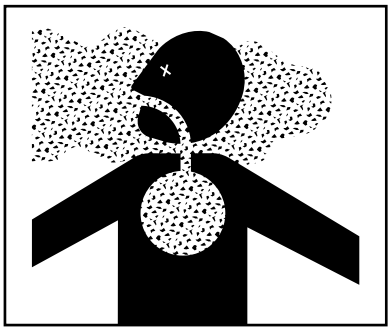

**Figure 1.6**

Engine exhaust fumes can cause sickness or death. If it is necessary to run an engine in an enclosed area, use proper equipment to safely remove exhaust fumes from the working area.

Open building doors and get fresh air into the working area whenever possible.

**PROTECT AGAINST NOISE**

Figure 1.7 - Long periods of exposure to high decibles or loud noise can cause hearing impairment or loss.

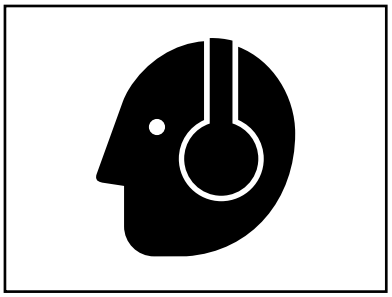

**Figure 1.7**

Wear proper hearing protection during periods of exposure to high decibels or loud noise.

Wear a proper hearing protective device such as earmuffs or earplugs to protect against high decibels and / or uncomfortable loud noises.

**AVOID MOVING PART HAZARDS**

Figure 1.8 - Entanglement in rotating drive lines or moving parts will cause serious injury or death.

Stay clear of all moving parts, such as shafts, couplings and universal joints.

Make sure all personnel are clear of machine before starting.

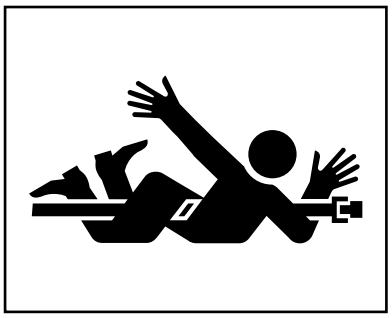

**Figure 1.8**

Figure 1.9 - Do not operate machine without all guards and shields closed and secured. Disconnect and lock out power source before removing guards.

Disconnect and lock out power source before adjusting or servicing.

Keep hands, feet, hair and clothing away from moving parts.

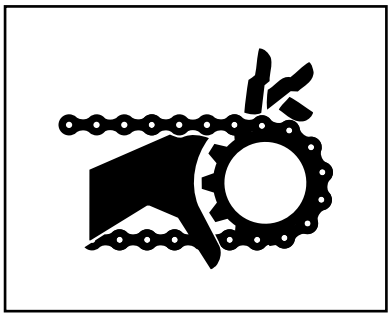

**Figure 1.9**

Figure 1.10 - Keep away from spinners while they are turning.

Rocks, scrap metal and other material can be thrown from the spinners violently. Stay away from discharge area.

Stop machine before servicing or adjusting. Wear eye protection.

Make sure discharge area is clear before spreading.

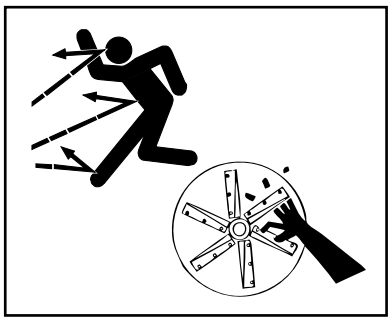

**Figure 1.10**

Figure 1.11 - Stay out of the spreader.

If it is necessary to enter the spreader, return to the shop, empty body, turn off all power, engage brakes, shut down engine and remove keys before entering.

Tag all controls to prohibit operation. Tags should only be placed, and later removed, by the person working in the body.

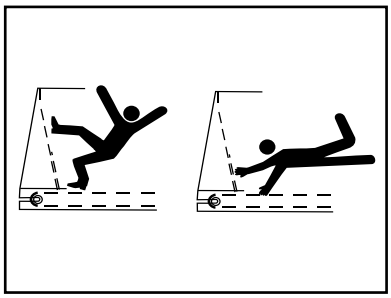

**Figure 1.11**

**DO NOT CLIMB OR STAND ON MACHINE**

Figure 1.12 - Never allow any personnel to ride in or on the machine.

Use only inspection ladder or portable ladder to view the unit. Use caution when getting on and off the ladder, especially in wet, icy, snowy or muddy conditions. Clean mud, snow and ice from steps and footwear.

Always maintain three-point contact with steps, ladders and handholds. Face the machine when mounting and dismounting inspection ladder. Do not jump off the machine.

**Figure 1.12**

**OPERATE MACHINE SAFELY**

Always walk around and visually inspect the machine before using. Check immediate vicinity of machine for people and obstructions. Ensure adequate visibility.

Avoid distractions such as reading, eating or operating personal electronics that take your attention away from operating the machine. Never operate the machine under the influence of alcohol, drugs or while otherwise impaired.

Always come to a complete stop before reversing. Be sure that all personnel are clear of machine path. Turn around and look directly for best visibility. Ensure all rear view mirrors are properly installed and adjusted. Use a signal person when backing if view is obstructed or when in close quarters.

Always disengage hydraulics before shutting down engine. DO NOT start engine with hydraulics engaged.

**TRAVELING & TRANSPORTING ON PUBLIC ROADS**

Always walk around and visually inspect the machine before traveling on public roads. Check for damage and/or faulty components that can fail and create a hazard or unsafe condition. Make sure all machine systems operate properly, including but not limited to: headlights, tail and brake lights, hazard warning lights, turn indicators, parking brake, horn and rear view mirrors. Repair or replace any component that is not in proper working order.

Never drive machine at a speed that causes it to bounce or cause loss of control.

Obey all traffic safety laws and regulations. Operate the machine with hazard warning lights on, unless prohibited by law. It is the operator's responsibility to activate and use road lights properly while traveling on public roads.

Cover all loads that may spill or blow away. Environmental damage may result. Do not spread dusty materials where dust may create pollution, visibility issues or interfere with traffic on public roads.

When transporting equipment or machine on a trailer, ensure it is properly secured. Be sure that SMV signs on equipment or machine are covered while in transport on a trailer.

Be aware of overhead structures and power lines. Make sure machine can safely pass under. Refer to "Dimensions & Capacities" pages in the Operations section of this manual.

**NAVIGATING ROUGH & UNEVEN TERRAIN**

Figure 2.1 - Turn slowly and be careful when traveling on rough surfaces and side slopes. Avoid holes, ditches and obstructions that may cause machine to roll over, especially with a loaded spreader.

Never drive near the edge of a gully or steep embankment.

Load may shift, causing vehicle to tip.

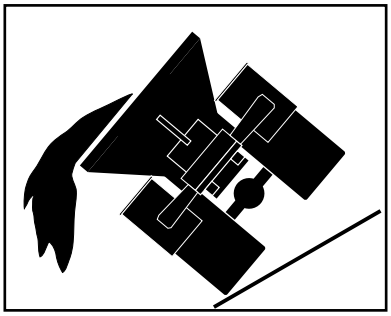

**Figure 2.1**

**READ AND UNDERSTAND MAINTENANCE PROCEDURES**

Figure 3.1 - Read the maintenance and safety instructions and understand them before performing any maintenance procedure.

Never perform any maintenance procedure or repair if the instructions and safety procedures are not fully understood. Only trained and qualified personnel should perform any maintenance procedure or repair.

Never modify any equipment or add attachements not approved by Highway Equipment Company.

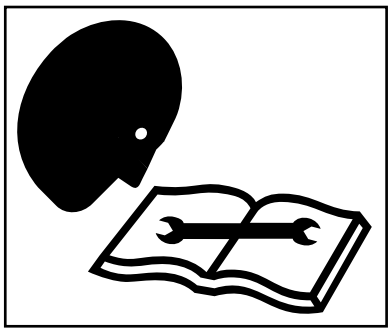

**Figure 3.1**

**DO NOT SERVICE OR ADJUST MACHINE WHILE IN MOTION**

Figure 3.2 - Never lubricate, service or adjust the machine or any of its components while they are moving.

Never wear loose clothing or jewelry when working near machine tools or moving parts.

Remove rings and other jewelry to prevent electrical shorts and other personal injury when in contact with machine tools or moving parts.

Close and secure all guards removed for service. Check all screws, bolts, nuts and fasteners for proper torques before operating machine.

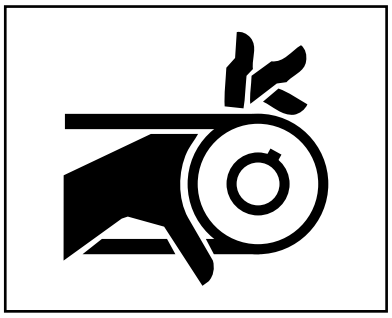

**Figure 3.2**

**WEAR PROPER PROTECTIVE EQUIPMENT**

Figure 3.3 - Wear close-fitting clothing and proper safety equipment for the job.

Always wear eye protection when working on or around the machine.

Wear a suitable hearing protection device such as earmuffs or earplugs to protect against high decibels or loud noises.

Prolonged exposure to high decibels or loud noise can cause hearing impairment or loss of hearing.

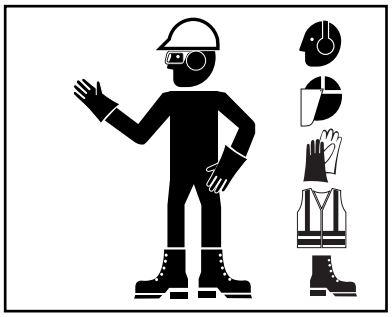

**Figure 3.3**

Wear protective gloves to protect hands from cuts, abrasions and minor burns.

**HANDLE FLAMMABLE SOLVENTS SAFELY**

Figure 3.4 - Never use diesel fuel, kerosene, gasoline or any flammable solvents for cleaning.

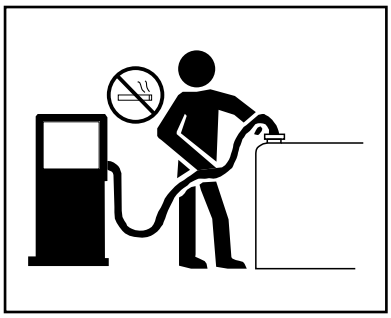

**Figure 3.4**

Perform work using flammable fluids and solvents in a safe place away from open flame and sparks. Do not smoke.

Do not weld, grind or flame cut on any tank containing oil, fuel, fumes or any other flammable material, or any container that contents or previous contents are unknown. Move all flammable materials and containers away from work area.

Clean up spilled fuel and oil immediately.

Always have a multipurpose dry chemical fire extinguisher filled and available. Know how to use it.

**USE PROPER LIFTING EQUIPMENT**

Figure 3.5 - Use only lifting devices that meet or exceed OSHA standard 1910.184 or ASME B30.20-2013.

**Figure 3.5**

Never lift equipment over people.

Never lift a loaded unit. Never lift unit with any loose objects or persons in the body. Loads may shift or fall if improperly supported, causing death, serious injury or machine damage.

Before unfastening heavy parts or assemblies, support with adequate hoist or other device to prevent falling, tipping, swinging or any other movement that may cause injury or damage.

**USE PROPER TOOLS FOR THE JOB**

Figure 3.6 - Use of improper tools (such as a screwdriver instead of a pry bar, pliers instead of a wrench, a wrench instead of a hammer) can cause serious injuries or machine damage.

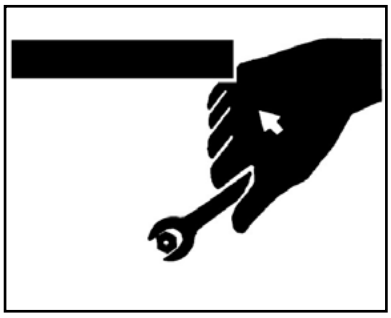

**Figure 3.6**

Use power tools only to loosen threaded parts and fasteners. Using power tools to tighten may cause over-tightening and component damage.

Use only service parts meeting Hi-Way specifications.

**HIGH PRESSURE FLUID HAZARDS**

Figure 3.7 - Escaping fluid under pressure can penetrate the skin causing serious injury.

Always stop machine, allow to cool and relieve pressure before servicing hydraulic system. Never open hydraulic lines under pressure. Make sure all connections are tight and all hoses are in good condition before pressurizing system.

Always use a piece of cardboard or wood to search for leaks instead of hand. Wear impervious gloves and eye protection when servicing system.

Seek medical attention immediately if fluid penetrates your skin. Gangrene may result if wound is left untreated.

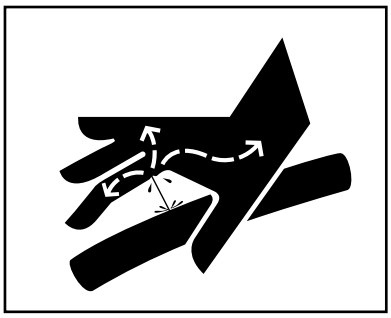

**Figure 3.7**

**AVOID HEATING NEAR HIGH PRESSURE FLUID LINES**

Figure 3.8 - Flammable spray can be generated by heating near pressurized fluid lines, resulting in burns to yourself and bystanders.

Do not heat by welding, soldering or using a torch near pressurized fluid lines or other flammable materials.

Pressure lines can suddenly burst when heat goes beyond the immediate flame area.

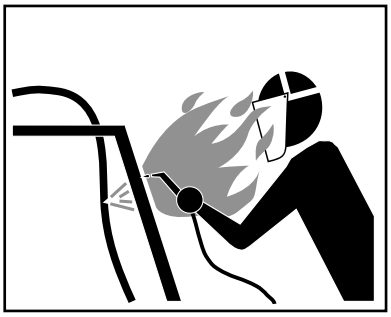

**Figure 3.8**

**AVOID TOXIC FUMES & DUST**

Figure 3.9 - Hazardous fumes can be generated when paint is heated from welding, soldering or using a torch.

Remove paint before heating:

- Remove a minimum of 4 in (100mm) from area to be affected by heating. If paint cannot be removed, wear an approved respirator while heating or welding.
- Avoid breathing dust from sanding or grinding on paint.
- If a solvent or paint stripper is used, wash stripper away with soap and water before heating or welding. Remove solvent or paint stripper containers and other flammable material from area. Allow fumes to disperse for at least 15 minutes before heating or welding.

Do not use chlorinated solvents in areas where welding will take place.

Perform all work in a well-ventilated area that willl carry all toxic fumes and dust away.

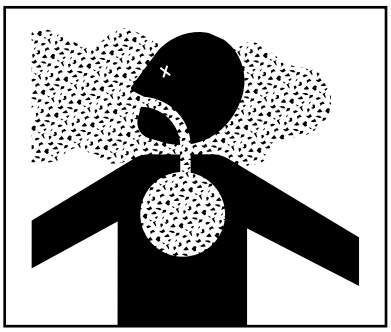

**Figure 3.9**

## CLEAN MACHINE OF HAZARDOUS CHEMICALS

| | |
|---|---|
| **CAUTION** | During application of hazardous chemicals, residue can build up on the inside or outside of the vehicle. Clean vehicle according to use instructions of hazardous chemical. |

Figure 3.10 - When exposed to to hazardous chemicals, clean exterior and interior of vehicle daily to keep free of the accumulation of visible dirt and contamination.

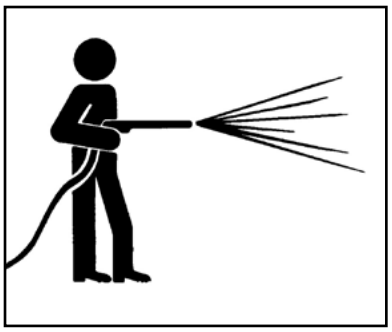

**Figure 3.10**

1. Clean operator's station to maintain unobstructed visibility of all windows and mirrors, and safe operation of all controls.

| | |
|---|---|
| **NOTICE!** | Directing pressurized water at electronic/ electrical components, bearings and hydraulic seals or other sensitive parts and components may cause product malfunctions. Reduce pressure and spray at 45 to 90 degree angles. |

2. Wash entire exterior of vehicle.
3. Dispose of any wash water with hazardous concentrations of active or non-active ingredients according to published regulations or directives.

## HANDLE BATTERIES SAFELY

| | |
|---|---|
| **WARNING** | Sulfiric acid in battery electrolyte is poisonous. It can burn skin, eat holes in clothing, and cause blindness if it contacts eyes. |

Figure 3.11 - Lead acid batteries generate flammable and explosive gases. Keep sparks and flame away from batteries. Do not smoke.

If acid contacts eyes, skin or clothing, flush with water immediately. Seek immediate medical attention if acid contacts eyes.

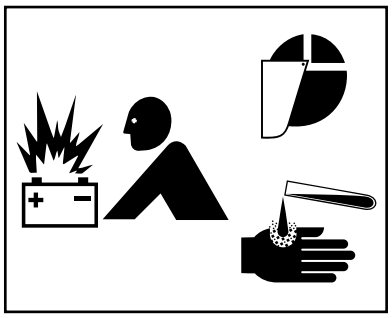

**Figure 3.11**

## PROPER TIRE MAINTENANCE

Figure 3.12 - Never weld on a wheel or rim that has a tire on it.

Never attempt to mount or remove a tire unless using the proper equipment, tire safety cage, instructions, training, and you are qualified to perform the work safely. Failure to follow the correct procedures when mounting a tire on a wheel or rim can cause an explosion and serious injury.

Tire service procedures must be performed by trained and qualified personnel.

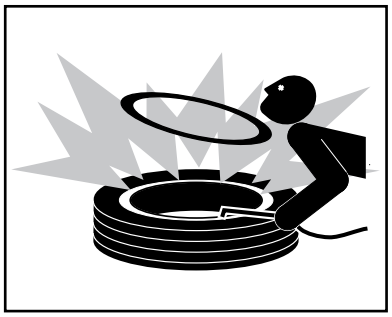

**Figure 3.12**

**PARK VEHICLE SAFELY**

Figure 4.1 - When leaving the vehicle unattended for any reason, be sure to:

- Shut down PTO.
- Shut off vehicle's engine, and unit's engine if applicable.
- Place vehicle transmission in "Neutral" or "Park".
- Set parking brake firmly.
- Remove ignition key and take it with you.
- Block wheels.

These actions are recommended to avoid unauthorized use, runaway, vandalism, theft and unexpected operation during startup.

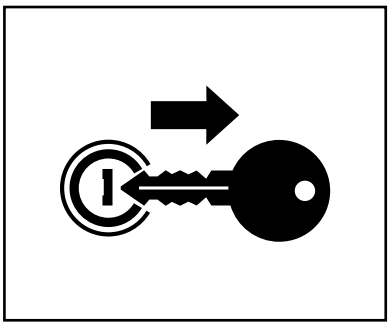

**Figure 4.1**

**SUPPORT MACHINE PROPERLY**

Figure 4.2 - When machine is removed from vehicle, always store on adequate supports on a firm level surface. Improper supporting or storage of spreader may cause machine to fall, resulting in serious injury or death.

Never use lifting device to free machine from a chassis, storage stands or frozen ground, or to lift the chassis in any way. Shock loading is prohibited and sudden accelerations must be avoided. Lifting in such a manner could result in injury or machine damage.

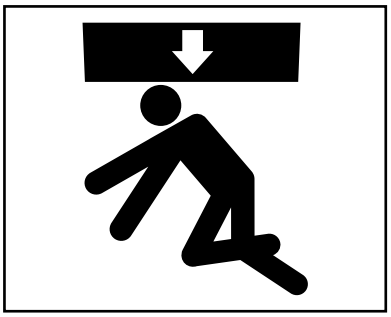

**Figure 4.2**

**DISPOSE OF WASTE PROPERLY**

Figure 4.3 - Improper disposal of waste can threaten the environment and ecology. Potentially harmful waste used with New Leader equipment such as fuel, oil, filters and batteries.

Use leakproof containers when draining fluids. Do not use food or beverage containers that may mislead someone into drinking from them. Do not pour waste onto the ground, down a drain, or into any water source.

Inquire on proper disposal methods from your local environmental or recycling center, or from your local dealer.

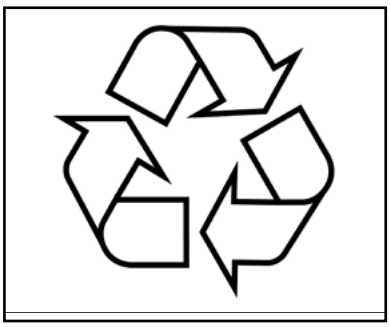

**Figure 4.3**

## SAFETY DECAL MAINTENANCE

Keep safety decals and signs clean and legible at all times.

Replace safety decals and signs that are missing or have become illegible.

Replaced parts that displayed a safety sign should also display the current sign.

Safety decals or signs are available from your dealer's Parts Department or from Highway Equipment Company by calling (800) 363-1771.

## SAFETY DECAL INSTALLATION

**Clean Surface**

Wash the installation surface with a synthetic, free-rinsing detergent. Avoid washing the surface with a soap containing creams or lotion. Allow to dry.

**Position Safety Decal**

Decide on the exact position before application. Application marks may be made on the top or side edge of the substrate with a lead pencil, marking pen, or small pieces of masking tape. NOTE: Do not use chalk line, china marker, or grease pencil. Safety decals will not adhere to these.

**Remove the Liner**

A small bend at the corner or edge will cause the liner to separate from the decal. Pull the liner away in a continuous motion at a 180-degree angle. If the liner is scored, bend at score and remove.

**Apply Safety Decal**

Tack decal in place with thumb pressure in upper corners. Using firm initial squeegee pressure, begin at the center of the decal and work outward in all directions with overlapping strokes. NOTE: Keep squeegee blade even—nicked edges will leave application bubbles. Pull up tack points before squeegeeing over them to avoid wrinkles.

**Remove Pre-mask**

If safety decal has a pre-mask cover remove it at this time by pulling it away from the decal at a 180 degree angle. NOTE: It is important that the pre-mask covering is removed before the decal is exposed to sunlight to avoid the pre-mask from permanently adhering to the decal.

**Remove Air Pockets**

Inspect the decal in the flat areas for bubbles. To eliminate the bubbles, puncture the decal at one end of the bubble with a pin (never a razor blade) and press out entrapped air with thumb moving toward the puncture.

**Re-Squeegee All Edges**

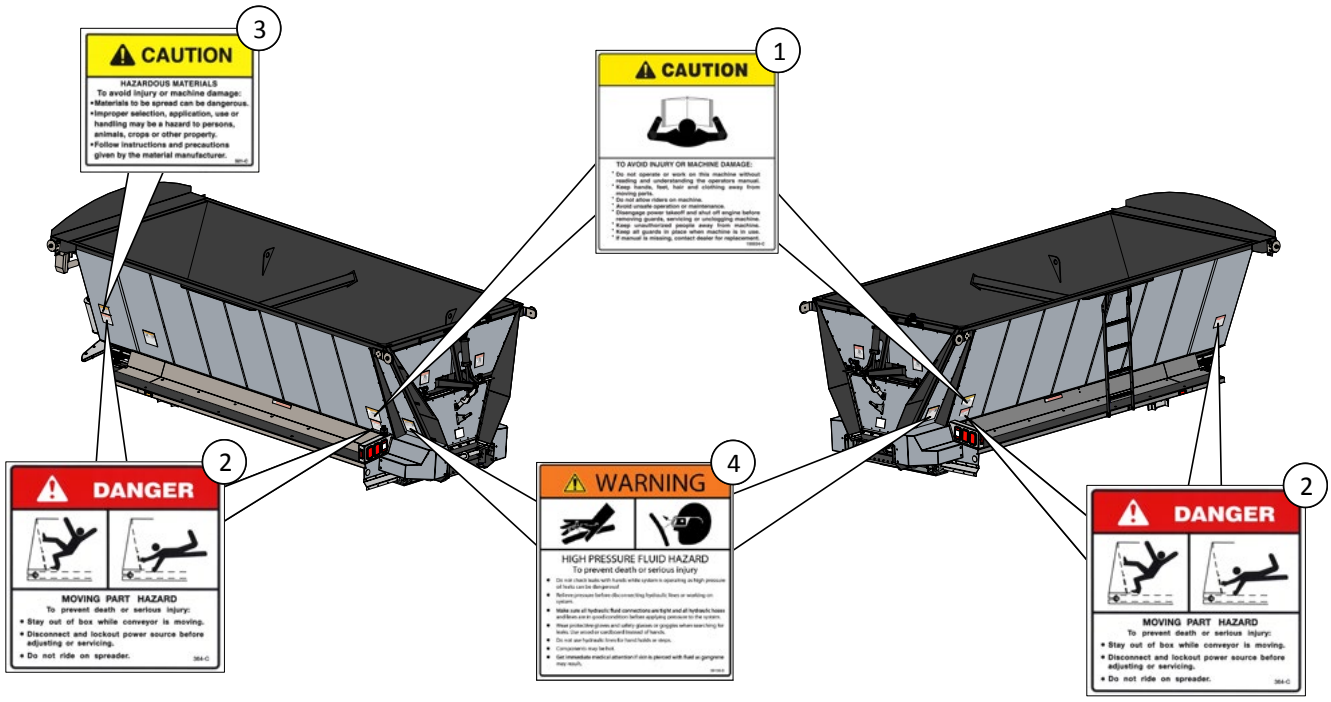


**1. CAUTION: TO AVOID INJURY OR MACHINE DAMAGE:**

- Do not operate or work on this machine without reading and understanding the operator's manual.
- Keep hands, feet, hair and clothing away from moving parts.
- Do not allow riders on machine.
- Avoid unsafe operation or maintenance.
- Disengage power takeoff and shut off engine before removing guards, servicing or unclogging machine.
- Keep unauthorized people away from machine.
- Keep all guards in place when machine is in use.
- If manual is missing, contact dealer for replacement.

150034-C

**2. DANGER: MOVING PART HAZARD**

**To prevent death or serious injury:**

- Stay out of box while conveyor is moving.
- Disconnect and lock out power source before adjusting or servicing.
- Do not ride on the spreader.

364-C

**3. CAUTION: HAZARDOUS MATERIALS**

**To avoid injury or machine damage:**

- Materials to be spread can be dangerous.
- Improper selection, application, use or handling may be hazardous to persons, animals, crops or other property.
- Follow instructions and precautions given by material manufacturer.

321-C

**4. WARNING: HIGH-PRESSURE FLUID HAZARD**

**To prevent death or serious injury:**

- Do not check leaks with hands while system is operating as high pressure oil leaks can be dangerous!
- Relieve pressure before disconnecting hydraulic lines or working on system.
- Make sure all hydraulic fluid connections are tight and all hydraulic hoses and lines are in good condition before applying pressure to the system.
- Wear protective gloves and safety glasses or goggles when searching for leaks. Use wood or cardboard instead of hands.
- Do not use hydraulic lines for hand holds or steps.
- Components may be hot.
- Get immediate medical attention if skin is pierced with fluid as gangrene may result.

39138-D

**5. WARNING: MOVING PART HAZARD**

**To prevent death or serious injury:**

- Close and secure guards before starting.
- Do not stand or climb on machine.
- Disconnect and lockout power source before adjusting or servicing.
- Keep hands, feet and hair away from moving parts.

55631-C

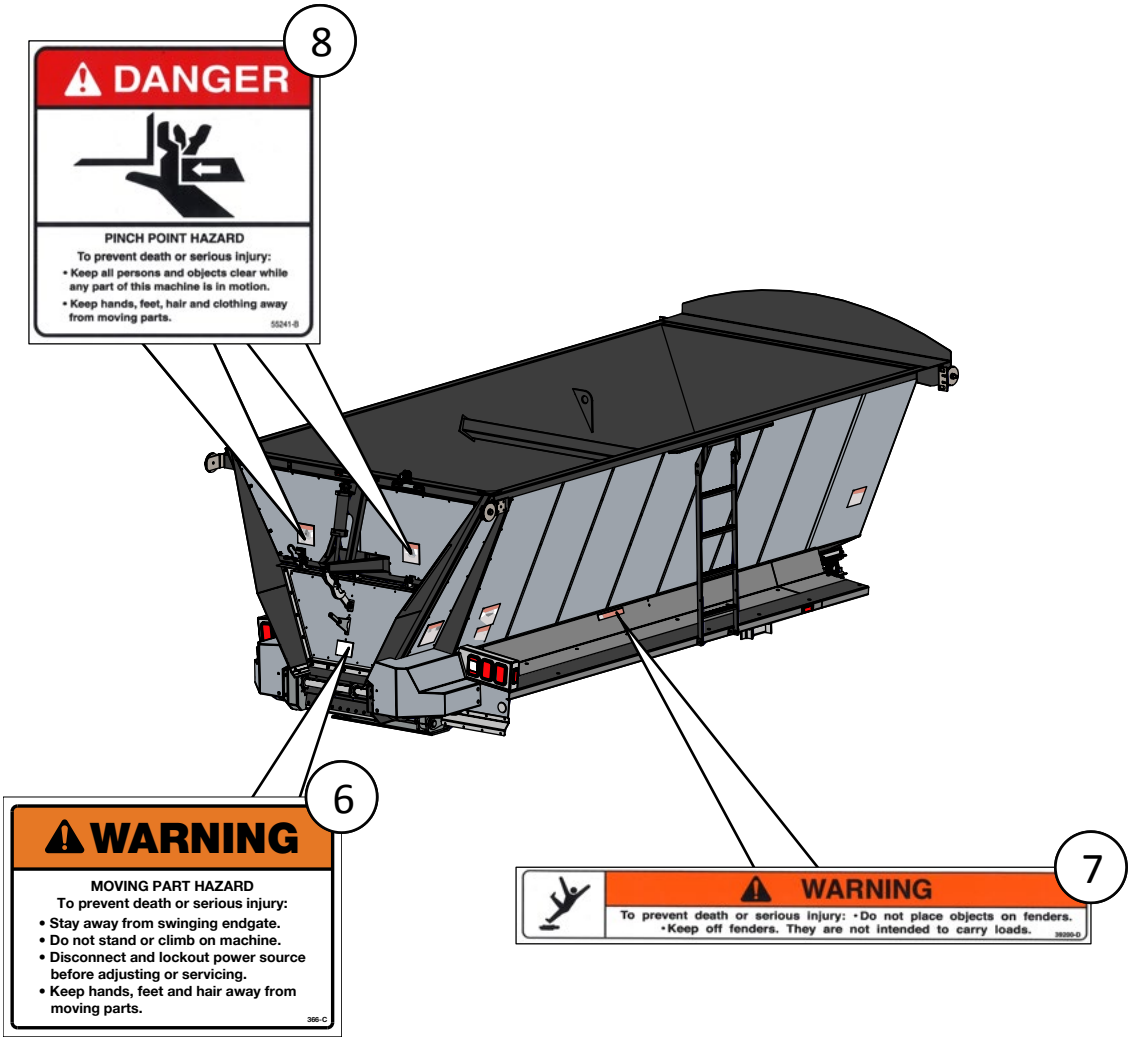


**6. WARNING: MOVING PART HAZARD**

**To prevent death or serious injury:**

- Stay away from swinging endgate.
- Do not stand or climb on machine.
- Disconnect and lockout power source before adjusting or servicing.
- Keep hands, feet and hair away from moving parts.

366-C

**7. WARNING: FALLING HAZARD**

**To prevent death or serious injury:**

- Do not place objects on fenders.
- Keep off fenders. They are not intended to carry loads.

39200-D

**8. DANGER: PINCH POINT HAZARD**

**To prevent death or serious injury:**

- Keep all persons and objects clear while any part of this machine is in motion.
- Keep hands, feet, hair and clothing away from moving parts.

55241-B

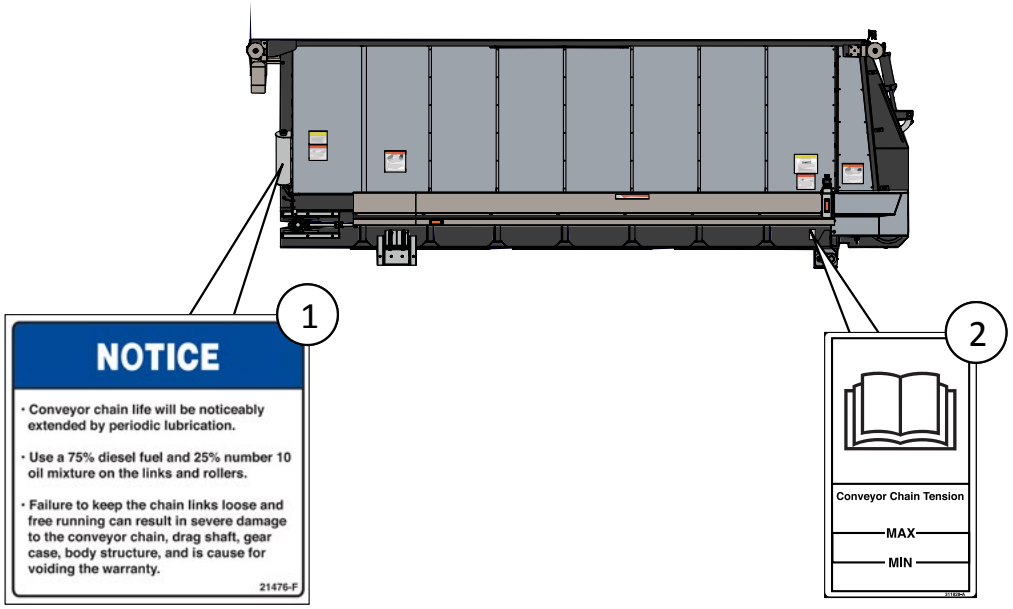


**1. NOTICE: CONVEYOR CHAIN LUBRICATION**

**To avoid machine damage and premature wear:**

- Conveyor chain life will be noticeably extended by periodic lubrication.
- Use a 75% diesel fuel and 25% number 10 oil mixture on the links and rollers.
- Failure to keep the chain links loose and free running can result in severe damage to the conveyor chain, drag shaft, gearcase and body structure, and is cause for voiding the warranty.

21476-F

**2. NOTICE: CONVEYOR CHAIN TENSION**

**To avoid machine damage and premature deterioration:**

- Periodically inspect conveyor chain tension to ensure proper tension is maintained.
- See “Lubrication & Maintenance” section of this manual for details.

311828-B

## Notes

This page is intentionally left blank.

## General Description

Click or scan QR code at left for installation instructions, or refer to www.highwayequipment.com > Hi-Way > “Menu” in upper right-hand corner > Customer Support > Manuals & Instructions > T6034 Installation Instructions.

The T6034 is designed to transport and convey asphalt. It is intended for truck chassis mounting.

The endgate is hydraulically controlled from the cab. It has a discharge opening over eight square feet, providing an unobstructed flow of material.

Hydraulic 14.9 CID motors, mounted to heavy duty 6:1 gear cases on both sides of the shaft, drive the conveyor. The two inch idler and drive shafts can be replaced with minimal disassembly. Forged sprockets provide added durability.

The conveyor is an oil and heat resistant belt-over-chain. Parallel strands of pintle chain are joined by cross bars every other link.

Lower interior side walls and floor are manufactured with abrasion-resistant AR 235 steel. Insulation skins are made of 304 stainless steel. A double-ply layer of R-11 insulation keeps asphalt hot.

This product is intended for commercial use only.

## Dimensions & Capacities

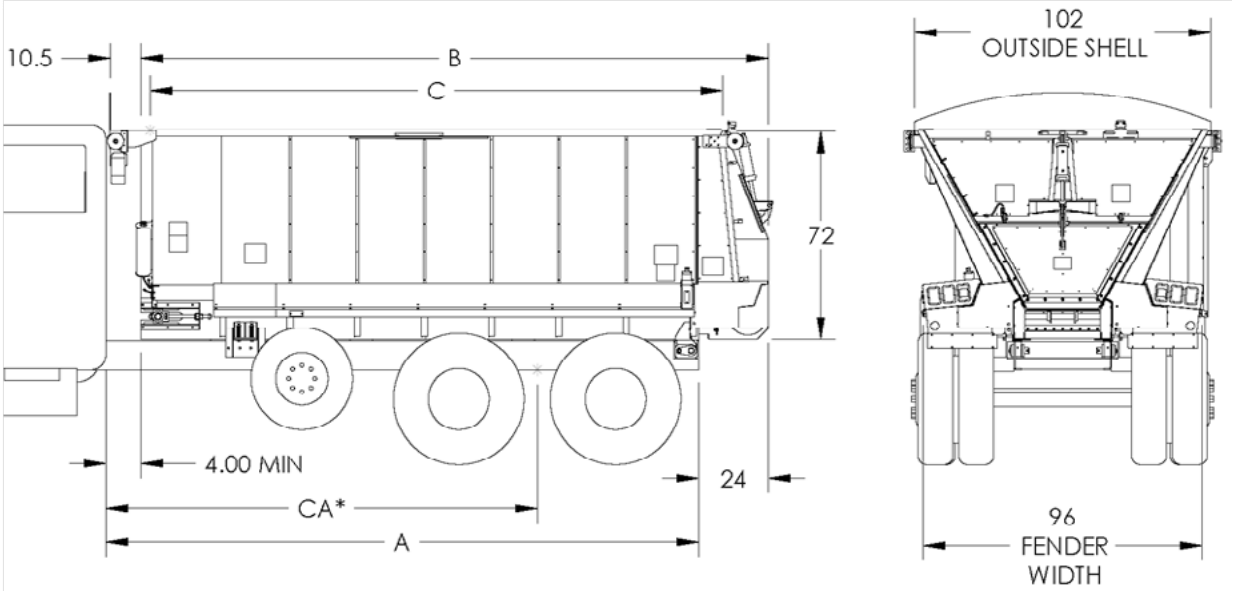


| | A | B | C | | |
|---|---|---|---|---|---|
| BOTTOM LENGTH feet (m) | REAR OF CAB TO END OF FRAME inches (cm) | OVERALL LENGTH inches (cm) | HOPPER OPENING cubic yards (cu m) | STRUCK CAPACITY cubic yards (cu m) | APPROX. WEIGHT ** EMPTY pounds (kg) |
| 14 (4.27) | 168 (426.72) | 180 (457.20) | 160 (122.33) | 12.46 (9.53) | 4850 (2199.90) |
| 15 (4.57) | 180 (457.20) | 192 (487.68) | 172 (131.50) | 13.41 (10.25) | 5200 (2358.70) |
| 16 (4.88) | 192 (487.68) | 204 (518.16) | 184 (140.68) | 14.37 (10.99) | 5550 (2517.40) |
| 17 (5.18) | 204 (518.16) | 216 (548.64) | 196 (149.85) | 15.32 (11.71) | 5900 (2676.20) |
| 18 (5.49) | 216 (548.64) | 228 (579.12) | 208 (159.03) | 16.27 (12.44) | 6250 (2835) |
| 19 (5.79) | 228 (579.12) | 240 (579.12) | 220 (168.20) | 17.22 (12.44) | 6600 (2993.70) |
| 20 (6.10) | 240 (609.60) | 252 (609.60) | 232 (177.38) | 18.17 (13.89) | 6950 (3152.50) |
| 21 (6.40) | 252 (640.08) | 264 (670.56) | 244 (186.55) | 19.12 (14.62) | 7300 (3311.20) |

| | |
|---|---|
| ***NOTICE!** | The Cab to Axle/Tandem dimensions are only guidelines. Consult federal, state and local weight laws and chassis manufacturer's ratings to ensure neither government weight restrictions, nor GVWR and GAWRs are exceeded. |

** Weight does not include optional features.

## *Initial Startup*

Prior to testing the unit, check the position of the ON-OFF control in the cab. It should be in the OFF position. Do not load the hopper.

1. Inspect entire unit to make sure all fasteners are in place and properly tightened per "Torque Chart" in this manual and all parts, including guards, are in place. Check for damaged components, replace as necessary.
2. Make sure no other persons are in vicinity of T6034.
3. Make sure no loose parts or other material is in unit or on conveyor.
4. Check oil level, fill as necessary. Refer to "Lubricant Specification" section for proper oil.
5. Make sure the machine has been properly serviced and is in good operating condition to verify that all components and systems are functioning properly.

| | |
|---|---|
| **DANGER** | Stay clear of moving machinery. |

6. Check all controls to make sure they are operating satisfactorily. Standard controls are as follows:
   - In-cab electric control switch – main control – open/close gate and start/stop conveyor.
   - In-cab rotary switch – control conveyor speed.
   - Override switch at rear of unit – override in-cab electric control.
7. Place cab conveyor control in ON position and rotate the conveyor speed control knob. Let the unit run until the air is expelled from the circuit and the conveyor is running smoothly.
8. Check all connections in the hydraulic system to make sure there are no leaks.
9. Check hydraulic oil reservoir and refill to "FULL" mark.
10. Make sure the rear gate is fully closed and locked.

| | |
|---|---|
| **DANGER** | Do not check leaks with hands while system is operating as high pressure leaks can be dangerous! If skin is pierced with hydraulic fluid at high pressure seek immediate medical attention as fluid injected into the skin could cause gangrene if left untreated. Relieve pressure before disconnecting hydraulic lines or working with system. Make sure all hydraulic fluid connections are tight and all hydraulic hoses and lines are in good condition before applying pressure to the system. Wear protective gloves and safety glasses or goggles when working with hydraulic systems. |

| | |
|---|---|
| **WARNING** | DO NOT check for hydraulic leaks adjacent to moving parts while system is operating as there may be danger of entanglement! |

Unit is now ready for operation.

| | |
|---|---|
| **CAUTION** | If unit is used to transport chemicals, check with your chemical supplier regarding DOT (Department of Transportation) requirements. |

1. Load unit and drive to location where material is to be dispensed.
2. Make sure shut-off valve on hydraulic reservoir is fully opened.

| | |
|---|---|
| **CAUTION** | Stand clear of moving machinery. Make sure everyone is clear and out of the way before starting unit. Contact with moving parts could cause serious injury. |

3. With conveyor control in OFF position, engage pump drive and allow oil to circulate until it is warm (this may be done while traveling to loading or starting point). The colder the weather, the more important this "warm-up."
4. Make sure both in-cab control boxes are turned off and the override switch at the rear of the unit is active (released).
5. Engage the chassis hydraulic system.
6. Toggle the conveyor speed control box power switch to the ON position.

| | |
|---|---|
| **CAUTION** | Make sure area around gate is clear before opening. |

7. Toggle the main control switch to the RUN position. The gate should automatically raise and the conveyor should start when the gate is fully open.
8. Rotate the conveyor speed control knob to select the required feed rate.
   NOTE: The conveyor can be started and stopped as needed by toggling the main control switch between OFF and RUN. The switch at the rear of the unit can be used to stop the system at any time.
9. Toggle the main control to OFF when done.

| | |
|---|---|
| **WARNING** | Ensure Safety Lockout is engaged before making any adjustments to the Endgate or optional Internal Gate. |

10. Toggle the main switch to "CLOSE" and hold until the gate is locked into a closed position.

| | |
|---|---|
| **NOTICE!** | CHANGE THE HYDRAULIC OIL FILTER AFTER THE FIRST WEEK (OR NOT MORE THAN 50 HOURS) OF OPERATION ON A UNIT. |

Make sure conveyor speed control power switch is OFF before leaving the unit.

Proper cleaning and maintenance after use will keep your machine working efficiently and reliably. Refer to "Lubrication and Maintenance" section of this manual for instructions. Always repair worn or damage parts promptly.

**TARP**

See Tarp manufacturer's manual.

## *Weights of Various Materials*

| MATERIAL | APPROXIMATE DENSITIES lbs / Cu Yd (Cu m) Cu Ft |
|---|---|
| Ashes | 1080 (1420) 40 |
| Asphalt | 3000 (3920) 111 |
| Cinders | 810 (1060) 30 |
| LImestone, Crushed | 2700 (3530) 100 |
| Salt | 2160 (2830) 80 |
| Sand | 2700 (3530) 100 |
| Urea | 1620 (2120) 60 |

## PREVENTATIVE MAINTENANCE PAYS!

The handling of hot asphalt is a highly severe operation with respect to component wear. Establish a frequent, periodic preventative maintenance program to prevent rapid deterioration to equipment. Proper cleaning, lubrication and maintenance will yield longer life, more satisfactory service and more economical use of your equipment.

| | |
|---|---|
| **WARNING** | Shut off all power and allow all moving parts to come to rest before performing any maintenance operation. |

## HYDRAULIC SYSTEM

Proper oil in the hydraulic system is one of the most important factors for satisfactory operation. Utmost cleanliness in handling the oil cannot be stressed enough. Keep hydraulic oil in original closed containers, clean top of container before opening and pouring, and handle in extremely clean measures and funnels.

Check hydraulic oil level and filter condition regularly.

Refer to “Lubricant and Hydraulic Oil Specifications” for selection of the proper hydraulic fluid for use in the hydraulic system.

| | |
|---|---|
| **WARNING** | DO NOT check leaks with hands while system is operating as high pressure oil leaks can be dangerous! If skin is pierced with hydraulic fluid at high pressure seek immediate medical attention as fluid injected into the skin could cause gangrene if left untreated. Relieve pressure before disconnecting hydraulic lines or working system. Make sure all hydraulic fluid connections are tight and all hydraulic hoses and lines are in good condition before applying pressure to the system. Wear protective gloves and safety glasses or goggles when working with hydraulic systems. |

| | |
|---|---|
| **WARNING** | DO NOT check for leaks adjacent to moving parts while system is operating as there may be danger of entanglement! |

Periodically inspect hydraulic hoses and fittings for leaks. Repair and replace components as necessary.

## HYDRAULIC HOSE

Hose assemblies in operation should be inspected frequently for leakage, kinking, abrasion, corrosion or other signs of wear or damage. Worn or damaged hose assemblies should be replaced immediately.

| | |
|---|---|
| **WARNING** | Testing should be conducted in approved test stands with adequate guards to protect the operator. |

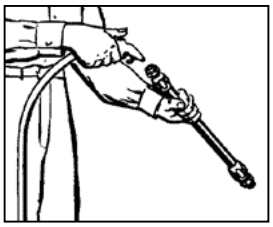

**Clean**
Clean assembly by blowing out with clean compressed air. Assemblies may be rinsed out with mineral spirits if the tube stock is compatible with oil, otherwise hot water at 150°F (65.55° C) maximum may be used.

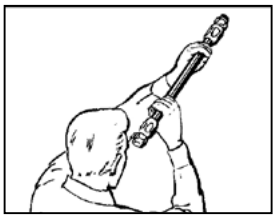

**Inspect**
Examine hose assembly internally for cut or bulged tube, obstructions, and cleanliness. For segment style fittings, be sure that the hose butts up against the nipple shoulder; band and retaining ring are properly set and tight, and segments are properly spaced. Check for proper gap between nut and socket or hex and socket. Nuts should swivel freely. Check the layline of the hose to be sure the assembly is not twisted. Cap the ends of the hose with plastic covers to keep clean.

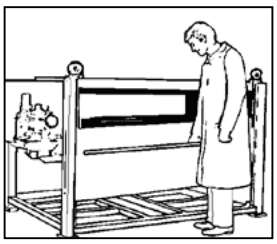

**Test**
The hose assembly should be hydrostatically tested at twice the recommended working pressure of the hose.
Test pressure should be held for not more than one minute and not less than 30 seconds. When test pressure is reached, visually inspect hose assembly for: 1. Any leaks or signs of weakness. 2. Any movement of the hose fitting in relation to the hose. Any of these defects are cause for rejection.

**Storage and Handling**

Hose should be stored in a dark, dry atmosphere away from electrical equipment, and the temperature should not exceed 90° F (32° C).

## CONVEYOR CHAIN

| | |
|---|---|
| **WARNING** | Stay out of the hopper body. If it's necessary to enter the hopper, return to the shop, empty body, turn off all power, set vehicle brakes, lock engine starting switch and remove keys before entering. Tag all controls to prohibit operation. Tags should be placed, and later removed, only by person working in the body. |

Hose down unit and remove any material build-up on sprockets and under chain.

| | |
|---|---|
| **NOTICE!** | The conveyor will move away from the bottom panel if material accumulates under the conveyor or on the sprockets. The more material that accumulates, the closer the chain will come to the chain shields. If the conveyor should catch a chain shield, it could permanently damage the conveyor, the chain shields or the unit. Do not remove material while conveyor or spinner is running! |

**Lubrication**

Make sure unit is clean and completely dry. Lubricate conveyor chain at least once a week using a mixture of 75% diesel fuel and 25% SAE 10 oil. Run conveyor at 20 RPM for two full revolutions to lubricate chain. After each unit washing, allow to dry, then lubricate.

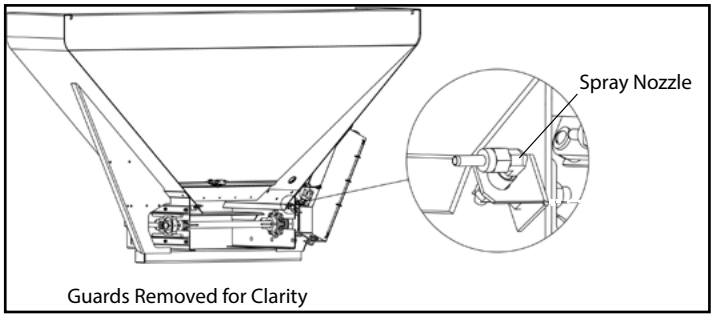


**Figure 1 - Spray Nozzle**

Before filling the unit with spreading material, activate the controller or power switch to run the pump oiler. Bleed all air from the lines and adjust the two spray nozzles so that the oil mixture sprays vertical onto the sprockets and chain.

**Tension**

Proper chain tension is also a factor in chain and sprocket life. Measuring from rear of unit, conveyor should touch at 36" to 40" mark, and top of chain should appear between MIN and MAX lines in sight window (Figure 2). If Manual adjustments need to be made, on valve block, loosen jam nut, back out to lower tension, or turn in to increase tension (Figure 2).

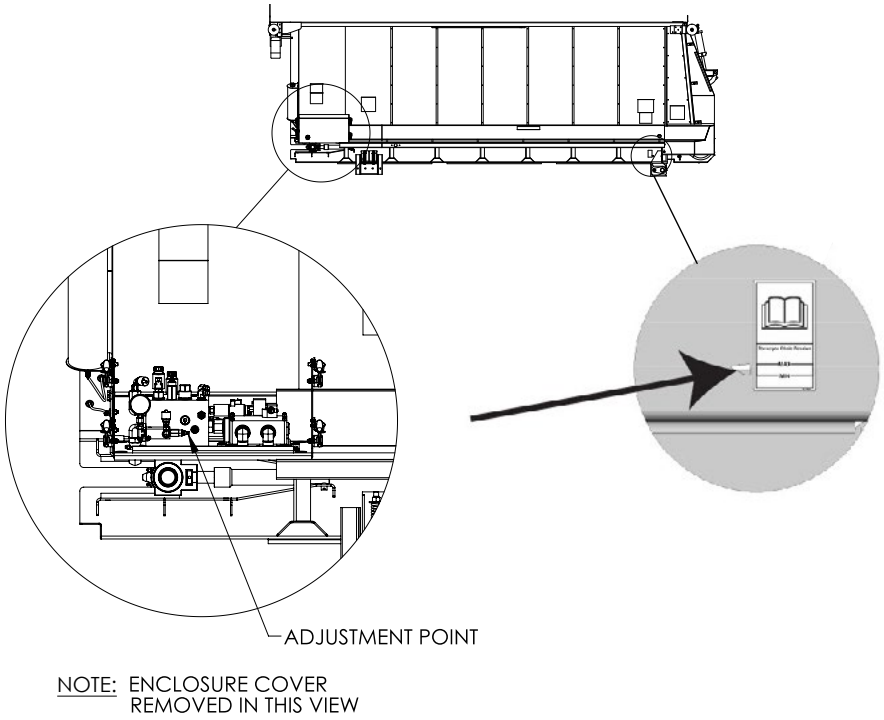


**Figure 2 - Adjusting Chain Tension**

Conveyor chains that are too tight will tend to stretch. This will cause excess sprocket wear and eventually cause breakage. Excess slack presents the possibility of the chain catching on sub-frame parts. Bent or distorted chain bars will cause damage to the body as well. Straighten or replace bent or distorted chain bars immediately.

## GEARCASE LUBRICANT

Fill the gearcase with non-corrosive type extreme pressure (E.P.) gear oil conforming to MIL-L2105 B multi-purpose gear lubricating oil requirements (API Service GL 4) based on ambient temperatures listed below:

- Refill capacity: 2 pints (1L)

| Ambient Temperature | Oil Type |
|---|---|
| Below 40°F (4.4°C) | SAE 80 E.P. |
| 40° - 100° F (4.4° - 38° C) | SAE 90 E.P. |
| Above 100° F (38° C) | SAE 140 E.P. |

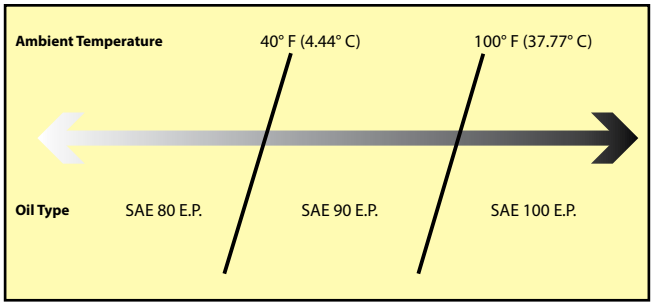


**Figure 3**

## #4 BOC CONVEYOR BELT MAINTENANCE

Standard belting for the #4 conveyor is moderately oil resistant (MOR) that is impervious to moisture, weathering, and normal action which can be used with chemical-impregnated fertilizer or oil-based additives.

- Inspect belt fastener occasionally for wear or “raveling” of belt grip area.
- Make sure belt connecting pin is positioned correctly as shown in Figure 3.

**NOTICE!** Pin must not rotate. If pin ends are not bent down and tight against lacing, the ends may cut into the chain shield sealers or belt wipers.

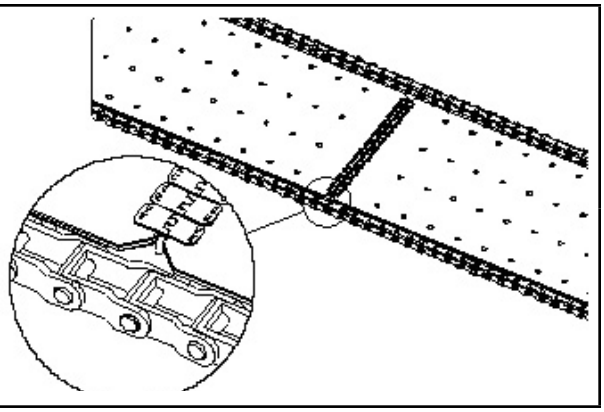


**Figure 4 - Conveyor Belt Connecting Pin Installation**

- Keep the belt free from build-up of asphalt or other material. Keep it clean.
- If unit is used regularly for asphalt handling, spray the belt often with oil to assure flexibility of the rubber and ease cleaning. Spray the underpart of the conveyor also, as dry heat is very harmful to the life of the belt.
- Keep asphalt temperature below 350° F and the belt running as much as possible when loaded. A hot sitting load is more damaging since it does not allow a cooling cycle for the belt.
- Allow belt to flex and warm up in cold weather before loading it with extremely hot product.
- Do not operate the belt in temperatures below -10° F. Operating in temperatures below -10° F. will cause the belt to crack prematurely.

A properly cared for belt, in normal use, will first experience cracking of the belt cover. This is normal for a belt of this type in an asphalt environment and does not indicate a failing belt. Eventually the belt cover will begin to harden and chunks of the cover begin falling off, exposing the steel. When this happens, replace the belt.

## CONVEYOR GEARCASE

Drain oil in a new unit after first two weeks (or not more than 100 hours) of operation, and flush gear case thoroughly with light oil. Refer to "Lubricant and Hydraulic Oil Specifications" section for proper grade oil and recommended amounts of lubricant. After initial change, oil should be changed every 2,000 hours of operation or annually, whichever occurs first. Check gearcase oil level monthly.

## LUBRICATION OF BEARINGS

Grease in a bearing acts to prevent excessive wear of parts, protects ball races, and balls from corrosion and aids in preventing excessive heat within the bearing. It is very important the grease maintain its proper consistency during operation. It must not be fluid and it must not channel.

Make sure all fittings are thoroughly cleaned before grease is injected. Points to be lubricated by means of a grease gun have standard grease fittings.

Lubricate bearings by pumping grease slowly until it forms a slight bead around the seals. This bead indicates adequate lubrication and also provides additional protection against the entrance of dirt.

## FASTENERS

Tighten all screws fasteners to recommended torques after first week of operation and annually thereafter. If loose fasteners are found at anytime, tighten to recommended torque. Replace any lost or damaged fasteners or other parts immediately. Check body mounting hardware every week.

## CLEAN-UP

| | |
|---|---|
| **NOTICE!** | High pressure wash can inject water and/or fertilizer into control components, causing damage. Use caution when cleaning these areas. |

Thoroughly wash unit every two to three days during the operating season to maintain minimal maintenance operation. Hose unit down under pressure to free all sticky and frozen material.

It is important the unit be thoroughly cleaned at the end of each operating season. All lubrication and maintenance instructions should be closely followed. Repaint worn spots to prevent formation of rust.

| | |
|---|---|
| **NOTICE!** | The lubricant distributor and/or supplier is to be held responsible for the results obtained from their products. Procure lubricants from distributors and/or suppliers with unquestionable integrity, supplying known and tested products. Do not jeopardize your equipment with inferior lubricants. No specific brands of oil are recommended. Use only products qualified under the following oil viscosity specifications and classifications and recommended by reputable oil companies. |

## HYDRAULIC SYSTEM

The following are the recommended procedures for selecting the proper hydraulic fluid for use in the hydraulic system. Select a major brand industrial PREMIUM QUALITY (anti-wear type) hydraulic oil to provide viscosity between 100-200 SSU at operating temperature. Premium hydraulic oils with viscosity indexes of 95 or above will provide the following temperature ranges :

| INDUSTRY IDENTIFICATION/ SAE VISCOSITY GRADE | OPERATING TEMPERATURE | VISCOSITY |
|---|---|---|
| 150 SSU | 122° F (50° C)/84° F (28.9° C) | 100 SSU/200 SSU |
| 225 SSU | 140° F (60° C)/107° F (41.7° C) | 100 SSU/200 SSU |
| 300 SSU | 150° F (66.6° C)/116° F (46.1° C) | 100 SSU/200 SSU |
| 450 SSU | 165° F (73.9° C)/130° F (54.5° C) | 100 SSU/200 SSU |
| 600 SSU | 182° F (83.3° C)/145° F (62.8° C) | 100 SSU/200 SSU |

If, because of necessity or convenience, it is desirable to use an automotive engine oil, multi-viscosity oils of SC rating (formerly MS quality) which will provide between 100-200 SSU at operating temperature can be used. These will provide proper viscosity over a wide range. For example:

| SAE VISCOSITY GRADE | OPERATING TEMPERATURE | VISCOSITY |
|---|---|---|
| 10W-30 | 130° F (54.5° C) | 100 SSU |
| | 100° F (37.8° C) | 200 SSU |
| 10W-40 | 190° F (87.8° C) | 100 SSU |
| | 140° F (60° C) | 200 SSU |

## GREASE GUN LUBRICANT

Use a waterproof ball and roller bearing lithium base lubricant with a minimum melting point of 300°F (150° C). This lubricant should have a viscosity which assures easy handling in the pressure gun at prevailing atmospheric temperatures. The grease should conform to NLGI No. 2 consistency.

## CONVEYOR CHAIN OILER

Use a 75% diesel fuel and 25% SAE 10 oil mixture on the links and rollers.

# Lubrication & Maintenance Chart

**WARNING** Shut off all power and allow all moving parts to come to rest before performing any maintenance operation.

| LOCATION | PLACES | METHOD | FREQUENCY |
|---|---|---|---|
| **Hydraulic System** | | | |
| Reservoir | 1 | Check Daily; Change Annually | |
| Filter | 1 | Check Daily; Change when indicator is red | |
| **Conveyor** | | | |
| Drive Shaft Bearings | 2 | Grease Gun | Weekly |
| Idler Shaft Sprockets | 2 | Grease Gun | Daily |
| Take-up Screws | 2 | Hand Grease | Monthly |
| Chain | 2 Strands | Spray Oil | Weekly |
| Chain Oiler (If so equipped) | 1 | Oil | Daily |
| Gear Case | 1 | Gear Box | Check Monthly; Change annually |
| **Feedgate** | | | |
| Jack Assembly - Gears | 1 | Hand Grease | Annually |
| Tube | 1 | Grease Gun | Monthly |
| **Mount** | | | |
| Hinge | 2 | Grease Gun | Monthly |

NOTE: Unusual conditions, such as excessive dust, temperature extremes or excessive moisture may require more frequent lubrication of specific parts.

* - See “Lubricant and Hydraulic Oil Specifications” for types of lubricants and oil to be used.

## HYDRAULIC SCHEMATIC

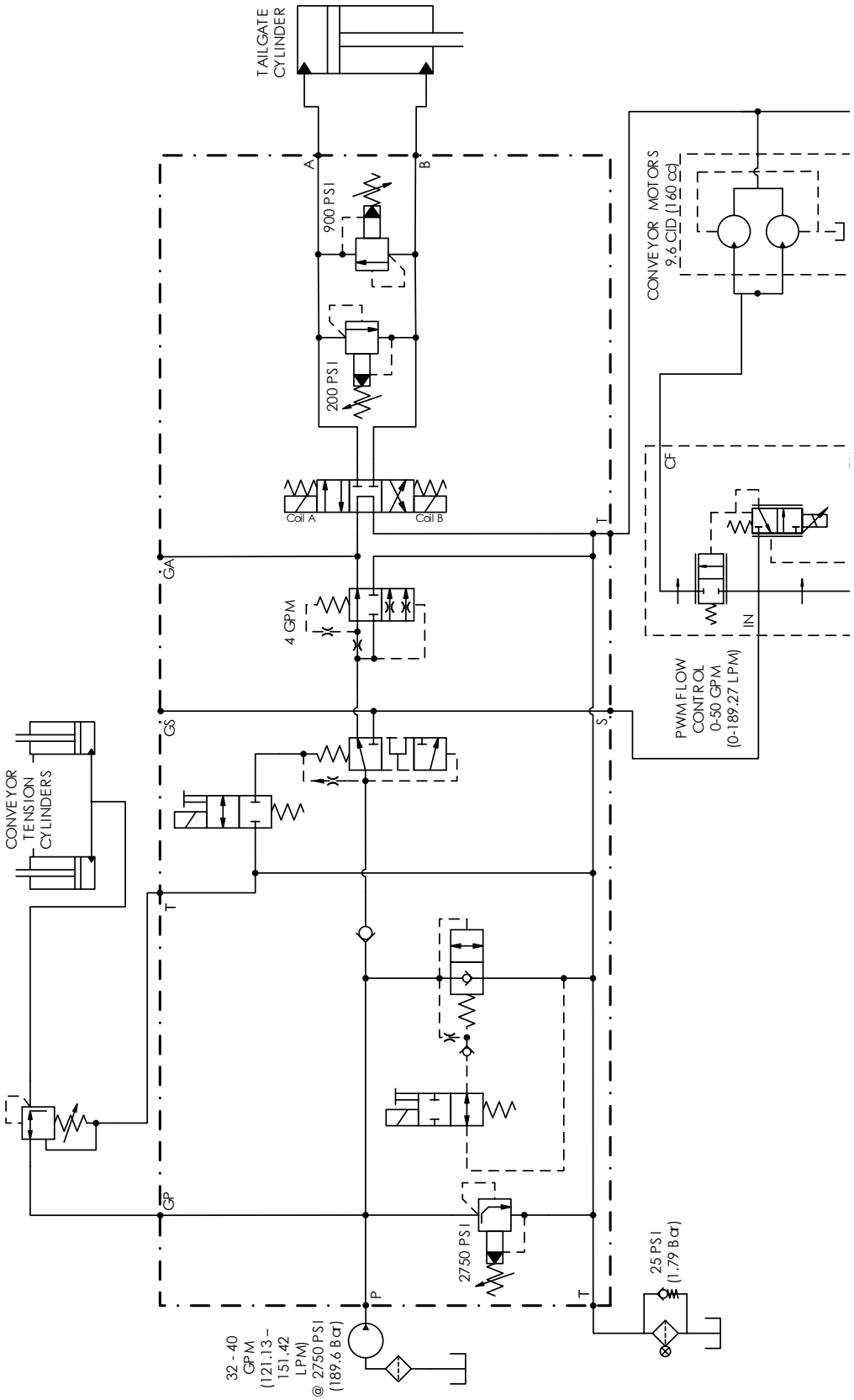

## ELECTRICAL SCHEMATIC

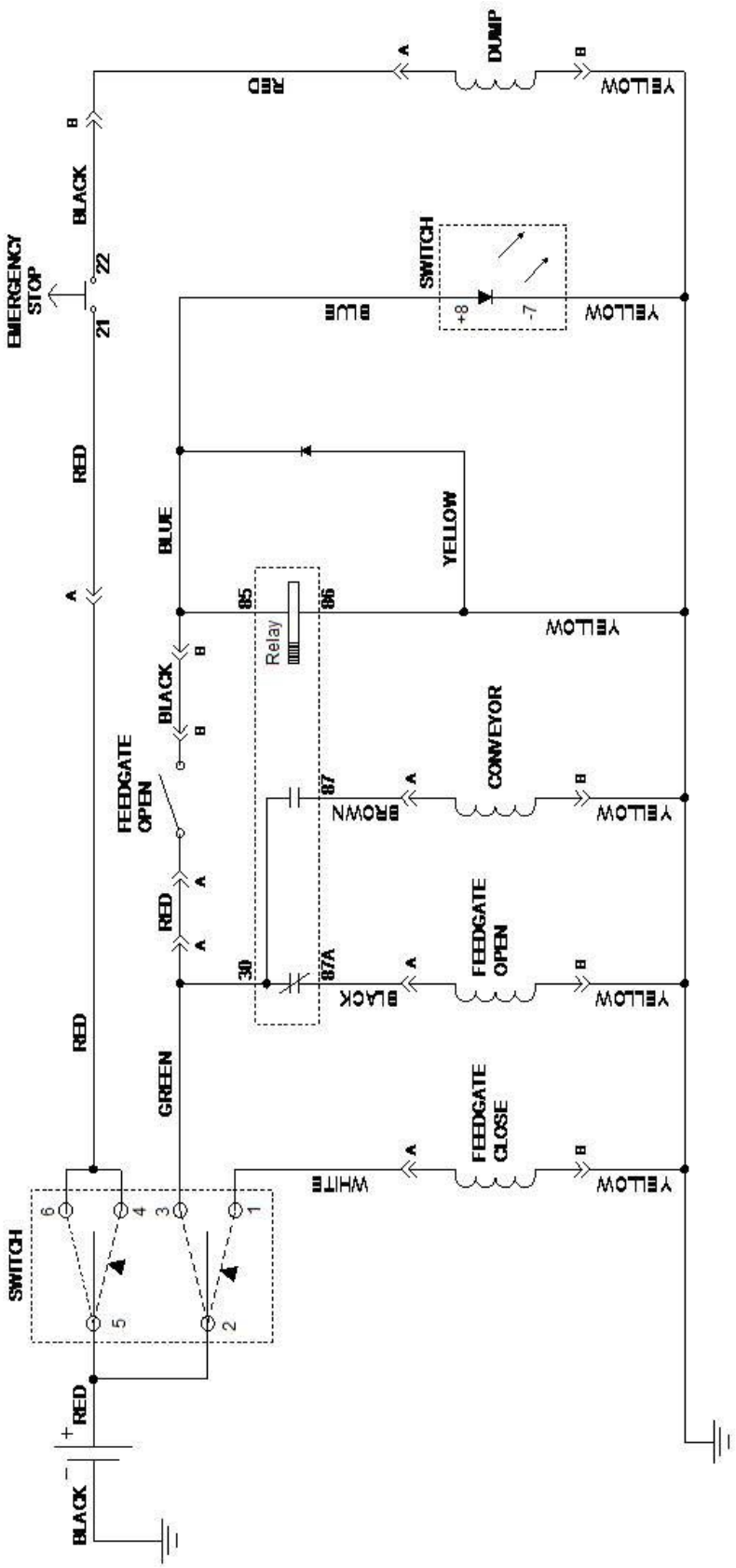

## CONTROLS INTERFACE

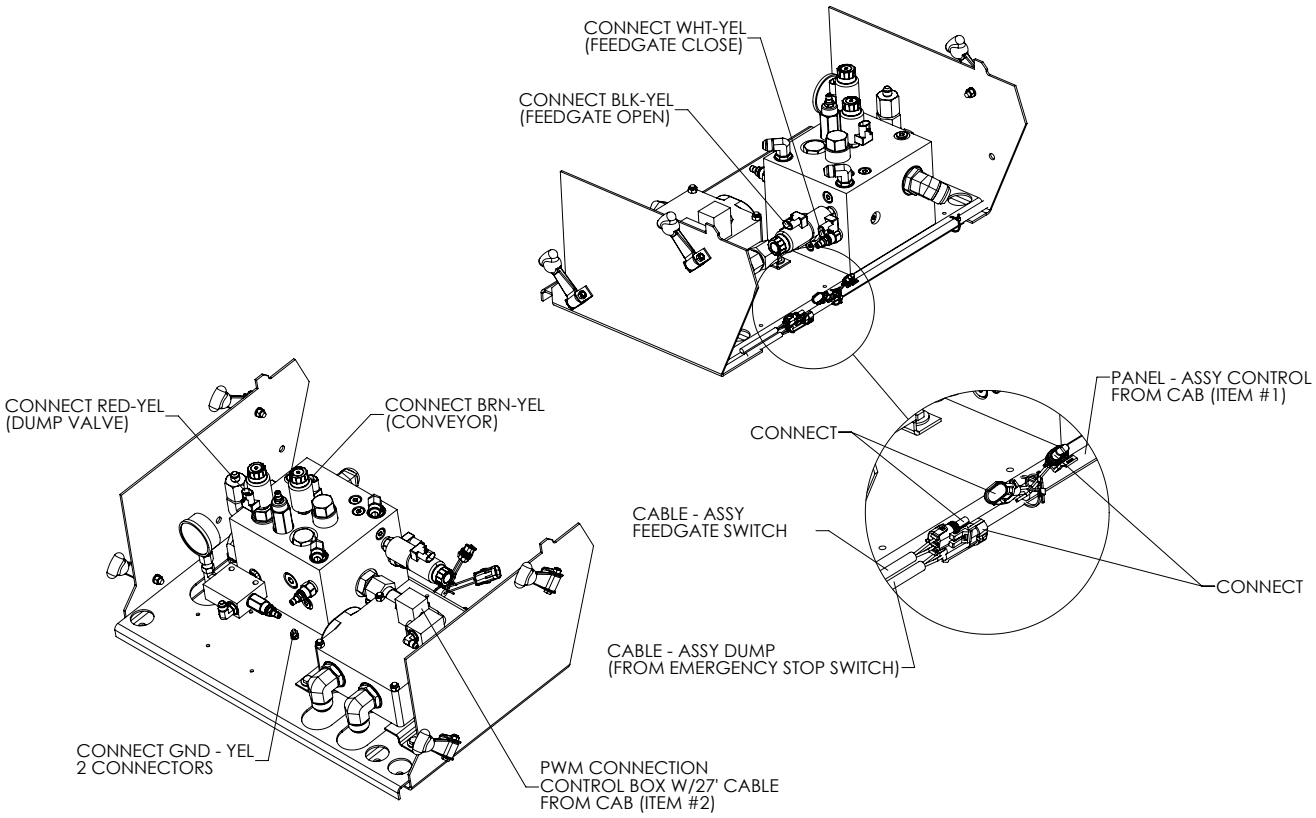

## *Standard Torques*

CAP SCREW GRADE IDENTIFICATION - MARKINGS ON HEAD

SAE GRADE 2 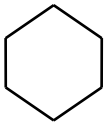 NO MARKINGS

SAE GRADE 5 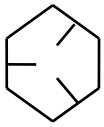 THREE MARKS - 120 DEGREES APART

SAE GRADE 8 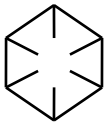 SIX MARKS - 60 DEGREES APART

USE GRADE 2 TORQUES FOR STAINLESS STEEL FASTENERS AND CARRIAGE BOLTS.

| | TORQUE - FOOT-POUNDS | | | | | |
|---|---|---|---|---|---|---|
| CAP SCREW SIZE | GRADE 2 | | GRADE 5 | | GRADE 8 | |
| | DRY | LUBE | DRY | LUBE | DRY | LUBE |
| 1/4” | 5 | 4 | 8 | 6 | 12 | 9 |
| 5/16” | 11 | 8 | 17 | 13 | 25 | 18 |
| 3/8” | 20 | 15 | 30 | 23 | 45 | 35 |
| 7/16” | 30 | 24 | 50 | 35 | 70 | 55 |
| 1/2” | 50 | 35 | 75 | 55 | 110 | 80 |
| 9/16” | 65 | 50 | 110 | 80 | 150 | 110 |
| 5/8” | 90 | 70 | 150 | 110 | 220 | 170 |
| 3/4” | 100 | 120 | 260 | 200 | 380 | 280 |
| 7/8” | 140 | 110 | 400 | 300 | 600 | 460 |
| 1” | 220 | 160 | 580 | 440 | 900 | 650 |

This page is intentionally left blank.

# Instructions for Ordering Parts

Hi-Way NEW LEADER
Highway Equipment Company

Order from the **AUTHORIZED DEALER** in your area.

Always give the pertinent model and serial number.

Give part name, part number and the quantity required.

Give the correct address to where the parts are to be shipped, and the carrier if there is a preference.

Unless claims for shortages or errors are made immediately upon receipt of goods they will not be considered. Any part returns should be directed through the dealer from which they were purchased.

When broken goods are received, a full description of the damage should be made by the carrier agent on the freight bill. If this description is insisted upon, full damage can always be collected from the transportation company.

No responsibility is assumed for delay or damage to merchandise while in transit. Our responsibility ceases upon delivery of shipment to the transportation company from whom a receipt is received showing that shipment was in good condition when delivered to them, therefore, claims (if any) should be filed with the transportation company and not with Highway Equipment Company.

If your claims are not being handled (by the transportation company) to your satisfaction, please call our Product Sales & Support Department at Highway Equipment Company at 888-363-8006 for assistance.

In the parts list the following symbols and abbreviations stand for:

* - Not Shown
AR – As Required
CS – Carbon Steel
SS – Stainless Steel
NS – Not Serviced

The parts listed under the different steel types (CS, 409 SS and 304 SS) are for that type of unit and do not necessarily mean the part is made of that type of steel.

# Body
## Mounting

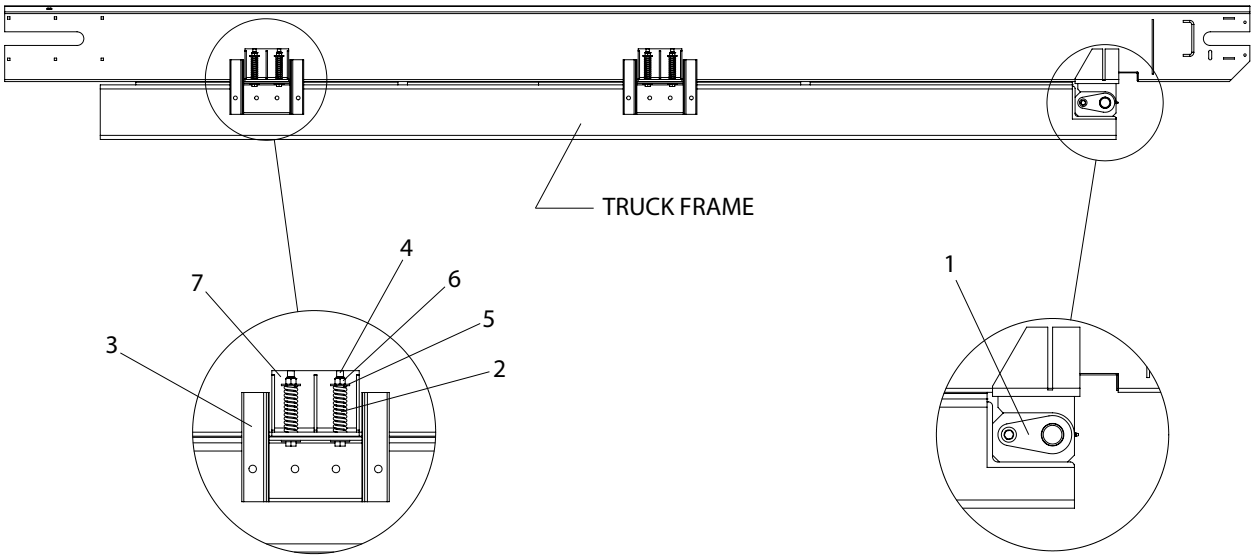


| ITEM | PART NO. | DESCRIPTION | QTY | |
|---|---|---|---|---|
| | | | 14’-17’ Units | 18’-21’ Units |
| 1 | 300398 | Hinge – Assy Relubeable | 1 | 1 |
| 2 | 81000 | Spring – Compression | 4 | 8 |
| 3 | 301624 | Angle – Wldmt Mount | 2 | 4 |
| 4 | 20195 | Cap Screw – 5/8-11 x 6-1/2 | 4 | 8 |
| 5 | 20697 | Washer – Flat 5/8 | 8 | 16 |
| 6 | 20682 | Nut – Lock 5/8-11 | 4 | 8 |
| 7 | 300275 | Mount – Wldmt Spring | 2 | 4 |

AR - As Required

# Body

## Hinge

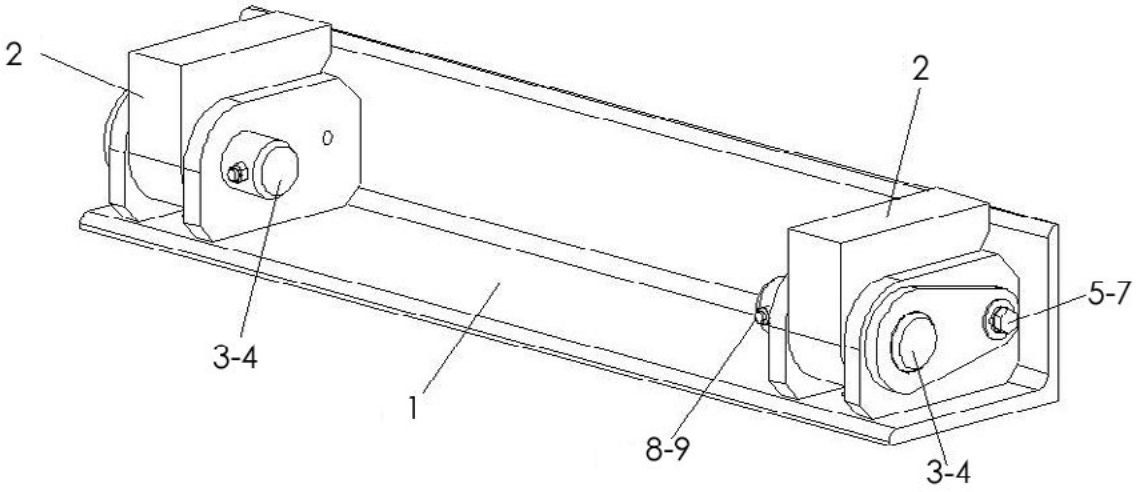


| ITEM | PART NO. | DESCRIPTION | QTY |
|---|---|---|---|
| | 300398 | Hinge – Assy 6” Greaseable | |
| 1 | 88608 | Hinge – Wldmt Angle | 1 |
| 2 | 300399 | Block – Hinge, Greaseable | 2 |
| 3 | 88605 | Bearing – Sleeve, Greaseless Hinge | 2 |
| 4 | 88612 | Pin – Wldmt Hinge | 2 |
| 5 | 20695 | Cap Screw – 1/2 x 1-1/2 | 2 |
| 6 | 20714 | Washer – Flat 1/2 | 2 |
| 7 | 20129 | Washer – Lock 1/2 | 2 |
| 8 | 20073 | Cap Screw – 3/8 x 2-1/2 | 2 |
| 9 | 20678 | Nut – Lock 3/8 | 2 |
| 10 | * 6072 | Zerk – Grease, Greaseable Hinge | 2 |

* - Not Shown

## Body

### Fenders

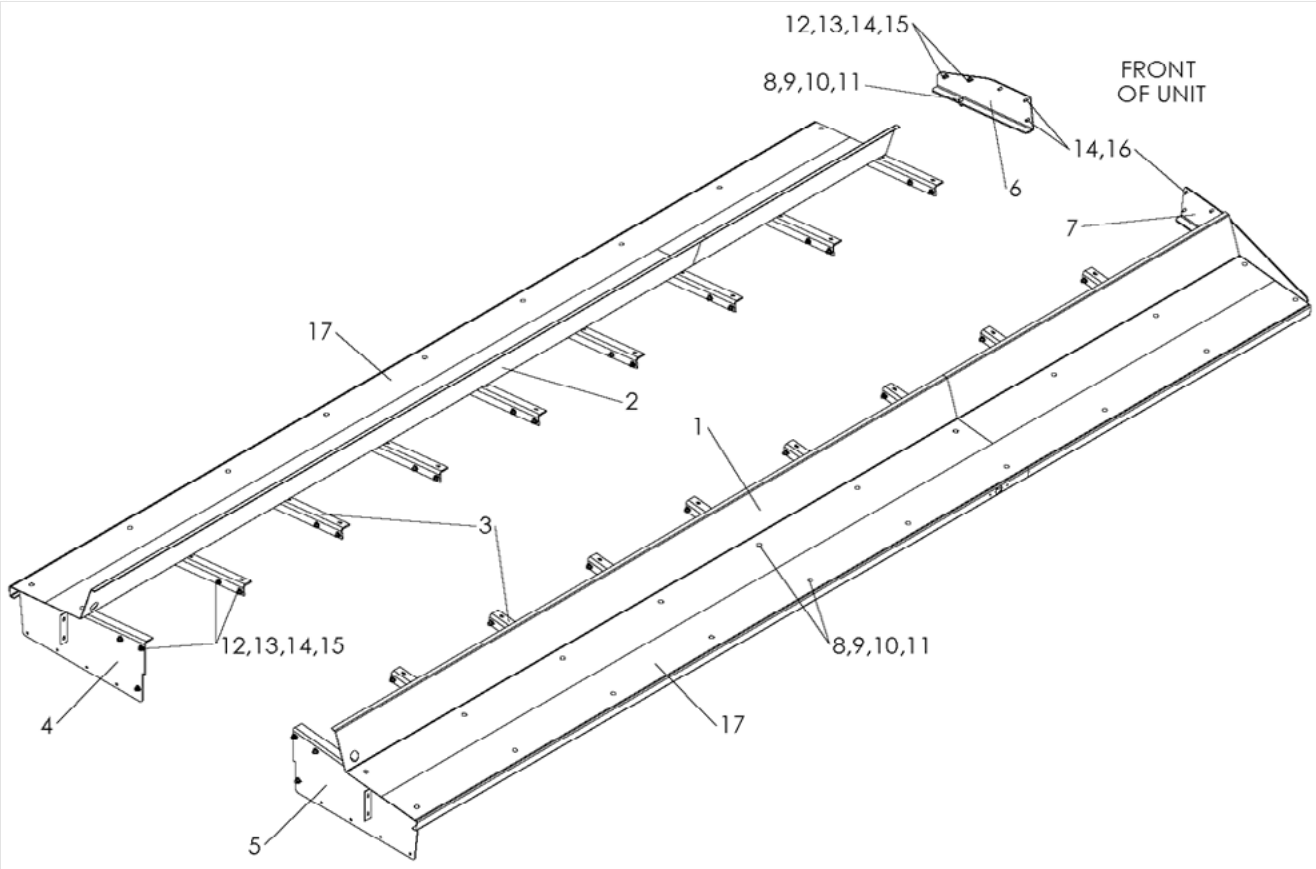

## Body

### Fenders Cont.

| ITEM | PART NO. | DESCRIPTION | QTY |
|---|---|---|---|
| 1 | | Fender – Panel RH | |
| | 306182 | 14-16’ Units – 120” 2-Axle | 1 |
| | 301618-AA | 17-18’ Units – 165-1/2” 3-Axle | 1 |
| | 301618-AC | 19’ Units – 210-3/8” 4-Axle | 1 |
| | 301618-AE | 20’ Units – 222-3/8” 4-Axle | 1 |
| | 301618-AG | 21’ Units – 234-3/8” 4-Axle | 1 |
| 2 | | Fender – Panel LH | |
| | 306183 | 14-16’ Units – 120” 2-Axle | 1 |
| | 301618-AB | 17-18’ Units – 165-1/2” 3-Axle | 1 |
| | 301618-AD | 19’ Units – 189-1/2” 4-Axle | 1 |
| | 301618-AF | 20’ Units – 201-1/2” 4-Axle | 1 |
| | 301618-AH | 21’ Units – 213-1/2” 4-Axle | 1 |
| 3 | 300075 | Angle – Fender | AR |
| 4 | 300226-AA | Bracket – Wldmt Mudflap LH | 1 |
| 5 | 300226-AB | Bracket – Wldmt Mudflap RH | 1 |
| 6 | 301642 | Bracket – Hydraulic Mount Front LH | 1 |
| 7 | 301643 | Bracket – Fender Front RH, 19-21’ Only | 1 |
| 8 | 36408 | Bolt – Carriage 3/8 x 1 SS | AR |
| 9 | 36425 | Washer – Flat 3/8 SS | AR |
| 10 | 36420 | Washer – Lock 3/8 SS | AR |
| 11 | 36414 | Nut – Hex 3/8 SS | AR |
| 12 | 20318 | Bolt – Carriage 3/8 x 1 | AR |
| 13 | 20693 | Washer – Flat 3/8 | AR |
| 14 | 20712 | Washer – Lock 3/8 | AR |
| 15 | 20644 | Nut – Hex 3/8 | AR |
| 16 | 20067 | Cap Screw – 3/8 x 1 | AR |
| 17 | 21699 | Decal – Non-Skid Fabric, Specify Length | AR ft |

AR - As Required

# Body

## Mud Flaps

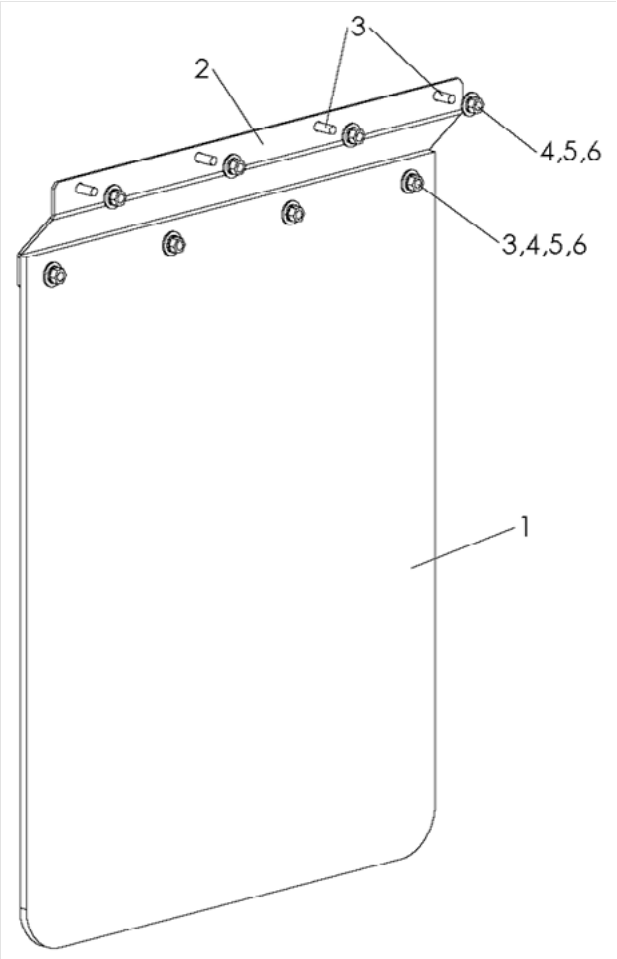


| ITEM | PART NO. | DESCRIPTION | QTY |
|---|---|---|---|
| 1 | NS | Mud Flap | 2 |
| 2 | 300288 | Bracket - Mud Flap | 2 |
| 3 | 20067 | Cap Screw - 3/8 x 1 | 8 |
| 4 | 20693 | Washer - Flat 3/8 | 8 |
| 5 | 20712 | Washer - Lock 3/8 | 8 |
| 6 | 20644 | Nut - 3/8 | 8 |

NS - Not Serviceable

# Body

## Straight Ladder

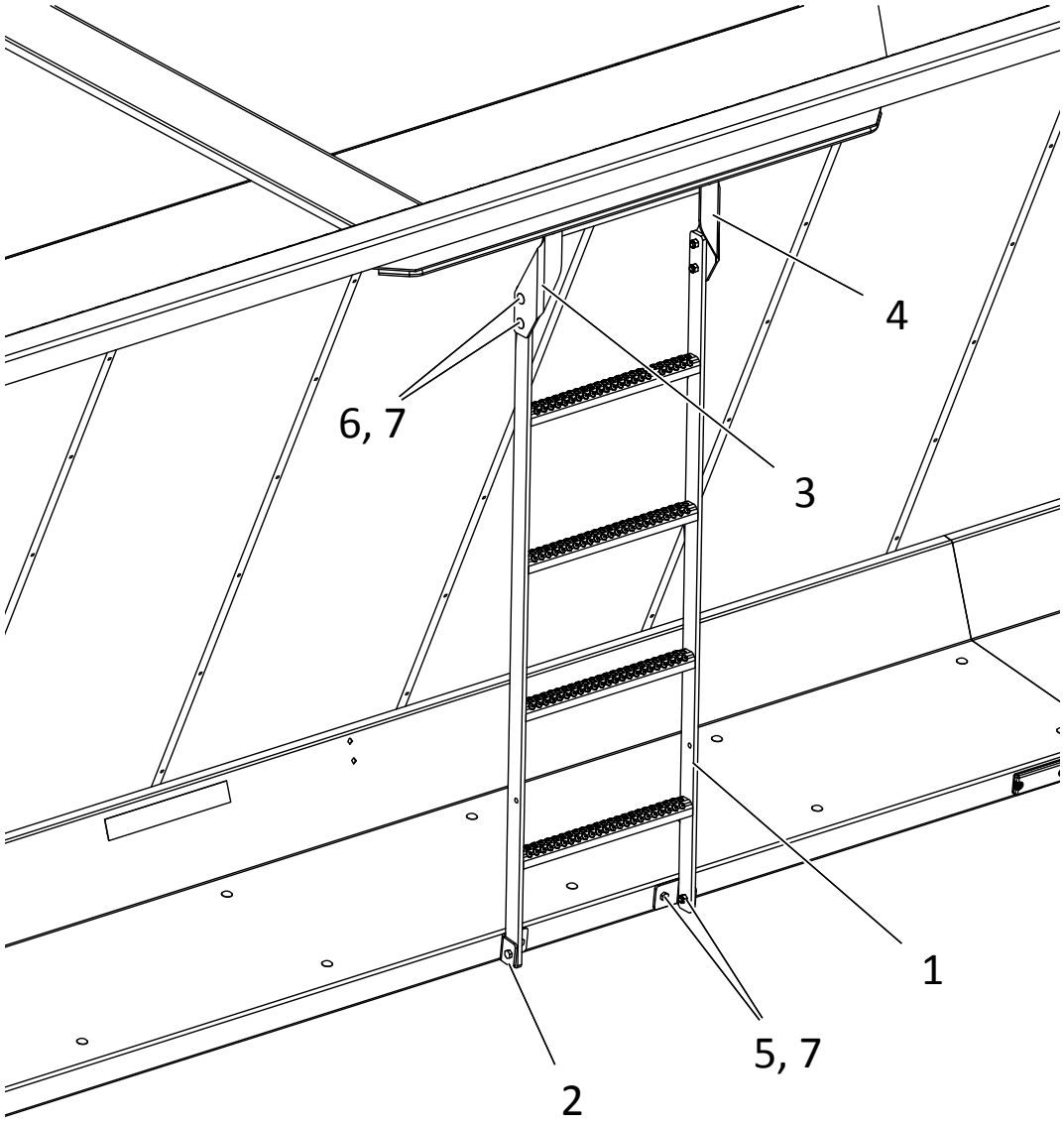


| ITEM | PART NO. | DESCRIPTION | QTY |
|---|---|---|---|
| 1 | 301601 | Ladder – Wldmt Upper | 1 |
| 2 | 301602 | Angle – Mount Ladder | 2 |
| 3 | 301603-AA | Bracket – Ladder Mount LH | 1 |
| 4 | 301603-AB | Bracket – Ladder Mount RH | 1 |
| 5 | 36398 | Cap Screw – 3/8-16 x 1 SS | 4 |
| 6 | 20318 | Bolt – Carriage 3/8 x 1 | 4 |
| 7 | 72054 | Nut – Lock 3/8 SS | 8 |

## Body

### Folding Ladder

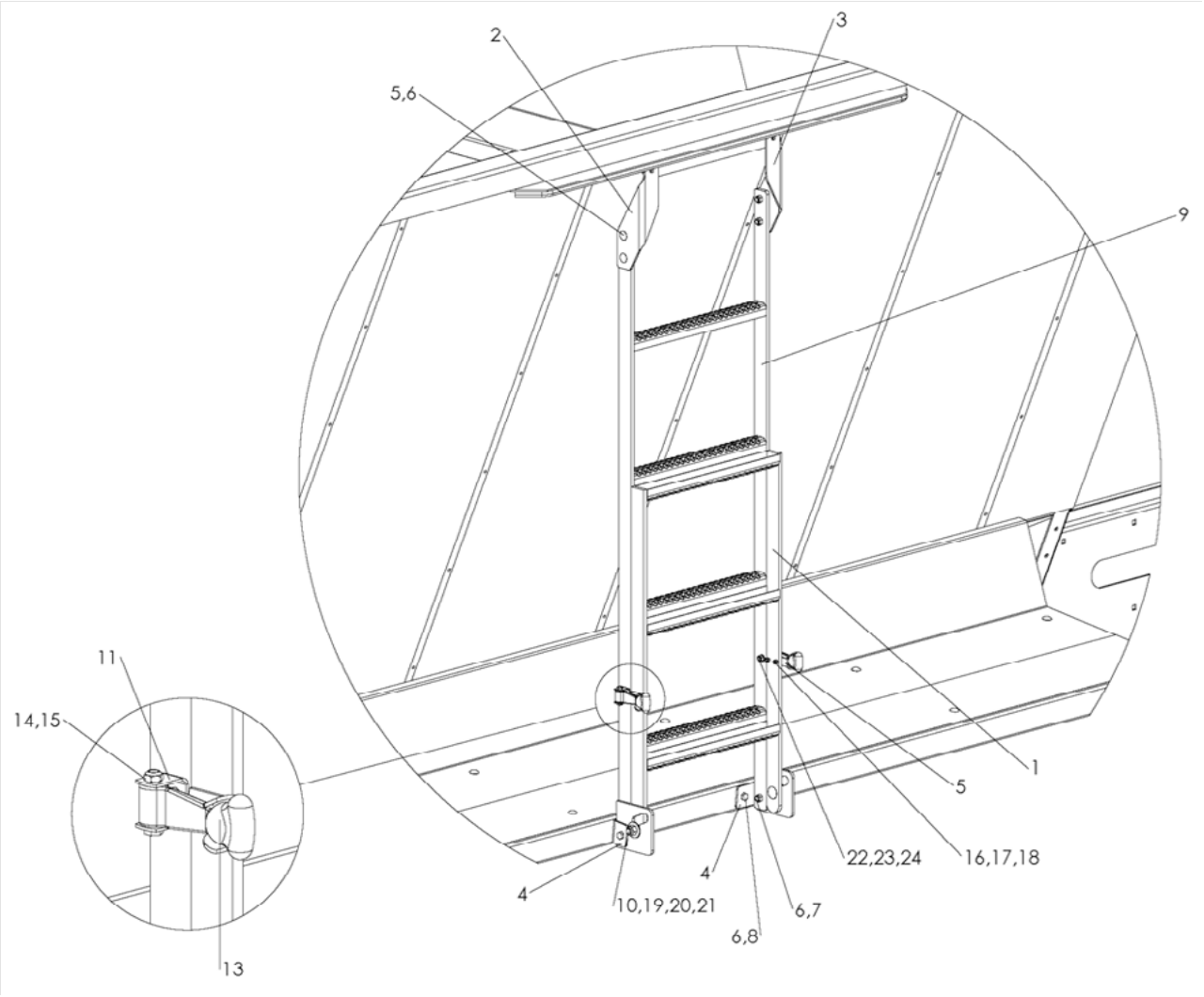

## Body

### Folding Ladder Cont.

| ITEM | PART NO. | DESCRIPTION | QTY |
|---|---|---|---|
| | 306047 | Ladder – Assy, Includes 1,9-24 | |
| 1 | 300456 | Ladder – Wldmt Lower 304 | 1 |
| 2 | 301603-AA | Bracket – Ladder Mount LH | 1 |
| 3 | 301603-AB | Bracket – Ladder Mount RH | 1 |
| 4 | 301602 | Angle – Mount Ladder 304 | 2 |
| 5 | 20318 | Bolt – Carriage 3/8 x 1 | 4 |
| 6 | 72054 | Nut – Lock 3/8 SS | 8 |
| 7 | 36399 | Cap Screw – 3/8 x 1-1/4 SS | 2 |
| 8 | 36398 | Cap Screw – 3/8-16 x 1 SS | 2 |
| 9 | 306046 | Ladder – Wldmt Upper 304 | 1 |
| 10 | 88638 | Tube – 3/4 x 11GA x 3/8 SS | 2 |
| 11 | 73344 | Bracket – Anchor | 2 |
| 12 | 150043 | Bracket – Hood | 2 |
| 13 | 73343 | Hook – Rubber | 2 |
| 14 | 42448 | Cap Screw – 1/4-20 x 1-1/2 | 2 |
| 15 | 42034 | Nut – Lock #10 SS | 2 |
| 16 | 44483 | Screw - #10-24 x 3/4 SS | 4 |
| 17 | 44451 | Washer – Lock #10 SS | 4 |
| 18 | 47295 | Nut – Hex #10 SS | 4 |
| 19 | 36411 | Bolt – Carriage 1/2-13 x 1-1/2 SS | 2 |
| 20 | 36426 | Washer – Flat 1/2 SS | 2 |
| 21 | 39016 | Nut – Lock 1/2-13NC SS | 2 |
| 22 | 300458 | Cap Screw – 5/16-18 x 7/8 SS | 2 |
| 23 | 36419 | Washer – Lock 5/16 SS | 2 |
| 24 | 36413 | Nut – Hex 5/16-18NC SS | 2 |

## Body

### Tarp

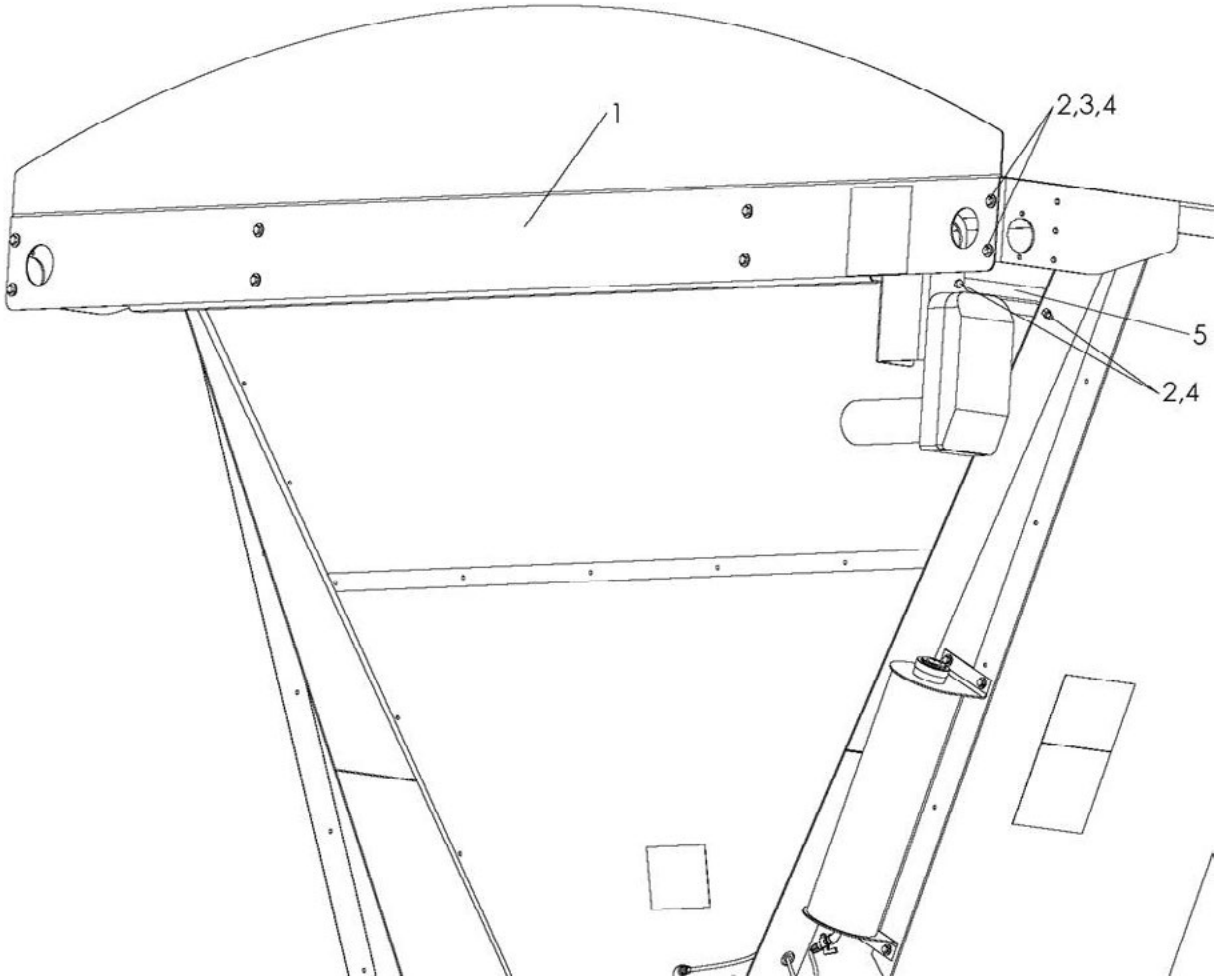


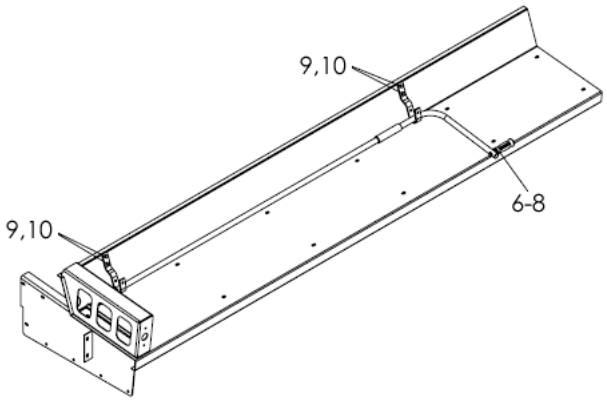

## Body

### Tarp Cont.

| ITEM | PART NO. | DESCRIPTION | QTY |
|---|---|---|---|
| 1 | 300283 | Cover Tarp Landing | 1 |
| 2 | 34580 | Cap Screw - 5/16 x 1 SS | AR |
| 3 | 36424 | Washer - Flat 5/16 SS | 16 |
| 4 | 42221 | Nut - lock 5/16 SS | AR |
| 5 | 300282 | Bracket - Torque Arm | 1 |
| 6 | 0395-191 | Clamp - Insulated Closed | 1 |
| 7 | 36393 | Cap Screw - 1/4 x 3/4 SS | 1 |
| 8 | 42034 | Nut - Lock 1/4 SS | 1 |
| 9 | 36293 | Cap Screw - 3/8 x 3/4 SS | 4 |
| 10 | 72054 | Nut - Lock 3/8 SS | 4 |
| 11 | *301612-AA | Kit - Electric Tarp Mount 14’ | 1 |
| | *301612-AB | Kit - Electric Tarp Mount 15-17’ | 1 |
| | *301612-AC | Kit - Electric Tarp Mount 18-20’ | 1 |
| | *301612-AD | Kit - Electric Tarp Mount 21’ | 1 |
| 12 | *301611-AA | Tarp - 14’ | 1 |
| | *301611-AB | Tarp - 15-17’ | 1 |
| | *301612-AC | Tarp - 18-19’ | 1 |
| | *301611-AD | Tarp - 20-21’ | 1 |

* - Not Shown

## Body

### Skins & Insulation

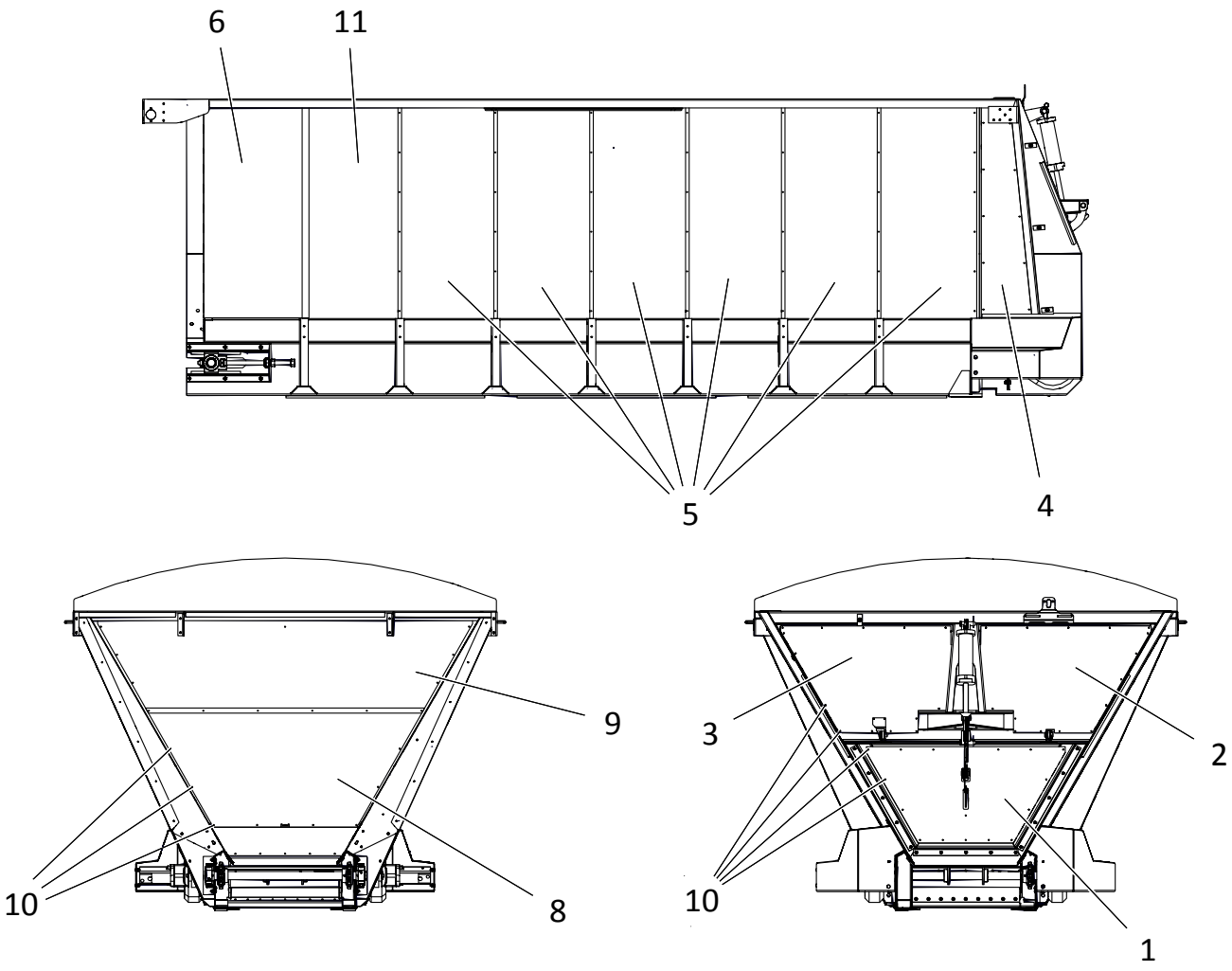

## Body

### Skins & Insulation Cont.

| ITEM | PART NO. | DESCRIPTION | QTY |
|---|---|---|---|
| 1 | 300215 | Skin – Lower Endgate | 1 |
| 2 | 300217-AA | Skin – Upper Endgate RH | 1 |
| 3 | 300217-AB | Skin – Upper Endgate LH | 1 |
| 4 | 300234-AA | Skin – Rear Side RH | 1 |
| | 300234-AB | Skin – Rear Side LH | 1 |
| 5 | 300265-AA | Skin – Side 24” | AR |
| 6 | 300266 | Skin – Side Front | 2 |
| 7 | 300267 | Insulation – R-11 23” Wide | AR |
| 8 | 300268 | Skin – Lower Front | 1 |
| 9 | 300269 | Skin – Upper Front | 1 |
| 10 | 300034 | Rivet – Pop Blind 1/4 SS | AR |
| 11 | 301615-AA | Skin – Side 12”, 14’ & 16’ Units Only | 2 |
| | 300265-AA | Skin – Side 24”, 15’ & 17’ Units Only | 2 |
| | 301615-AB | Skin – Side 14”, 18’ & 20’ Units Only | 2 |
| | 300265-AB | Skin – Side 26”, 19’ & 21’ Units Only | 2 |

AR - As Required

## Body

### Emergency Stop Switch

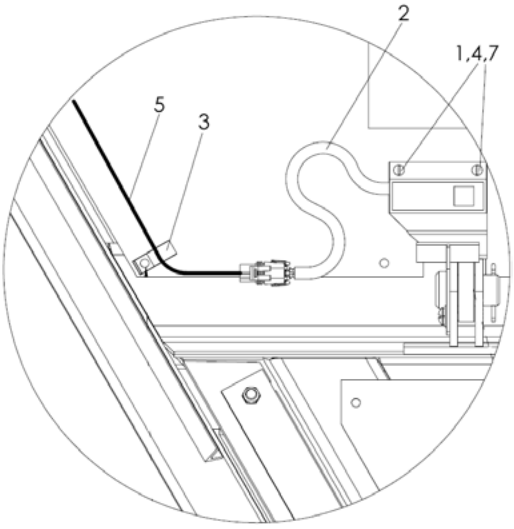


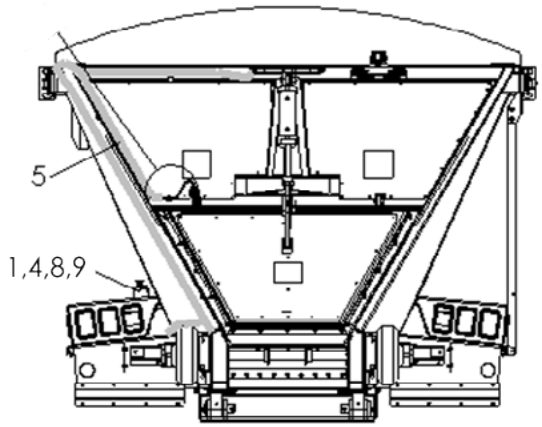


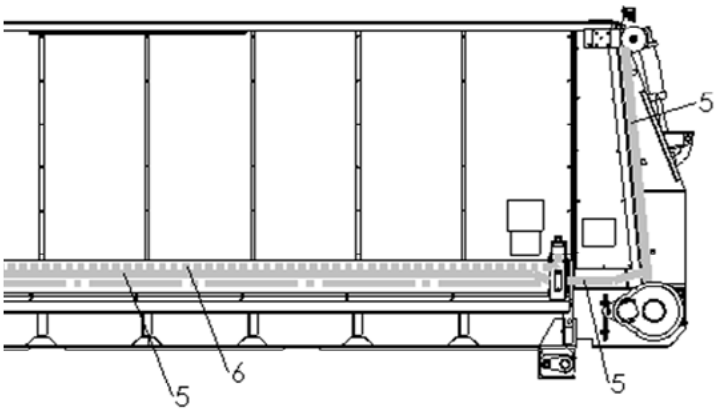

## Body

### Emergency Stop Switch Cont.

| ITEM | PART NO. | DESCRIPTION | QTY |
|---|---|---|---|
| 1 | 56355 | Nut – Lock #10-24 SS | 2 |
| 2 | 307132 | Switch – Assy Proximity. | 1 |
| | 307133 | Sensor - Proximity | 1 |
| | 303730-AB | Connector – Female Sealed Tower | 1 |
| | 303730-EC | Seal – Cable | 2 |
| | 303730-CB | Terminal – Female Sealed (Sleeve) | 2 |
| | 58728 | Conduit – Flexible 3/8 (ft) | .5 |
| 3 | 26562 | P-Clamp – Tubing 1/2" | 3 |
| 4 | 45168 | Nut – Lock #8-32 | 4 |
| 5 | 304630-AA | Cable – Assy Feedgate Switch 14’-16’ | 1 |
| | 304630-AB | Cable – Assy Feedgate Switch 17’-18’ | 1 |
| | 304630-AC | Cable – Assy Feedgate Switch 19’-21’ | 1 |
| 6 | 304631-AA | Cable – Assy Dump 14’-16’ | 1 |
| | 304631-AB | Cable – Assy Dump 17’-18’ | 1 |
| | 304631-AC | Cable – Assy Dump 19’-21’ | 1 |
| 7 | 44452 | Screw – Truss Head #10-24 x 1-1/2 | 2 |
| 8 | 47254 | Screw – Machine #8-32 x 3/4 | 4 |
| 9 | 306169 | Switch - Assy Enclosure | 1 |

## Body
### Lighting

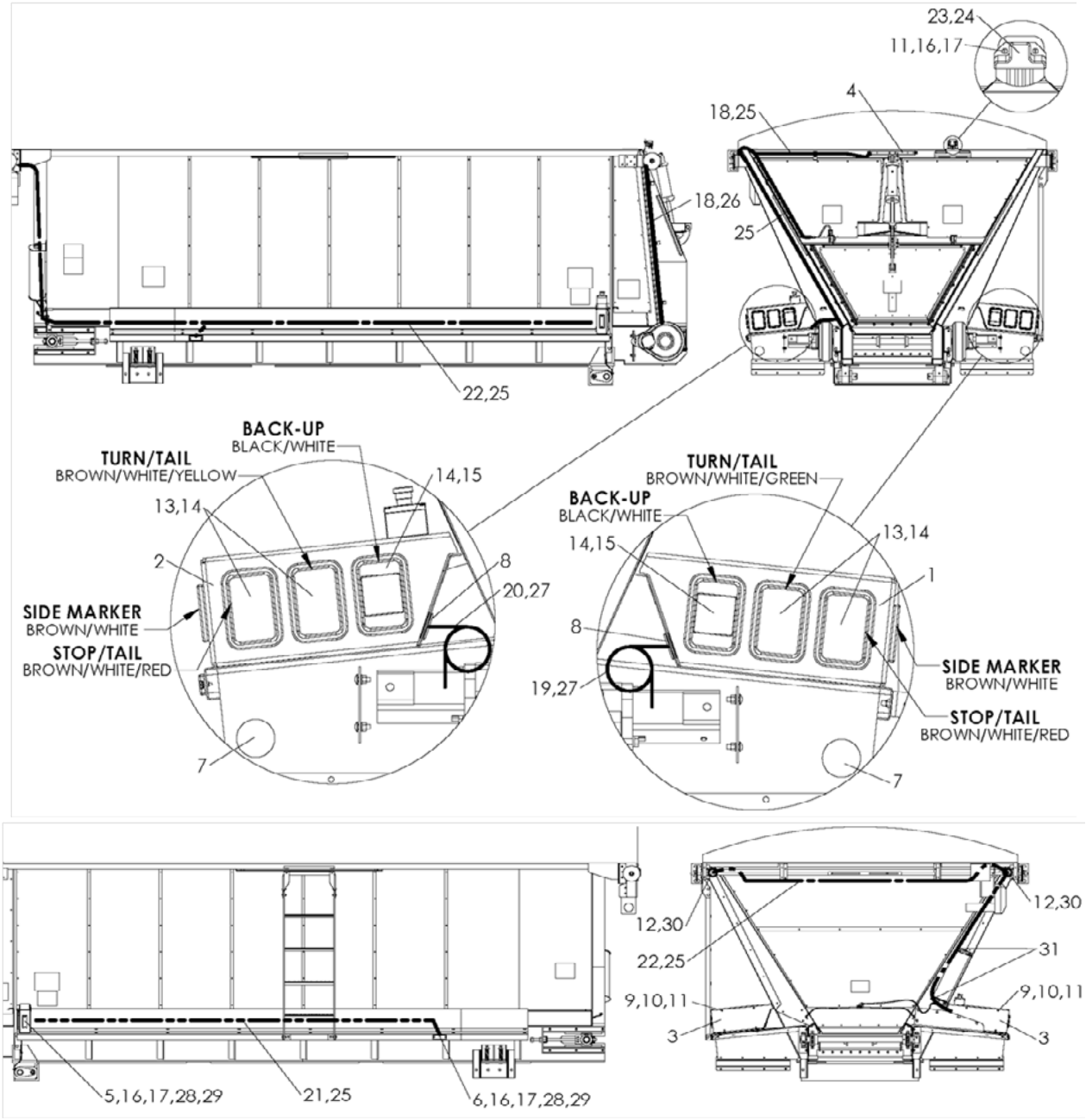


| ITEM | PART NO. | DESCRIPTION | QTY |
|---|---|---|---|
| 1 | 301641-AA | Module – Wldmt RH | 1 |
| 2 | 301641-AB | Module – Wldmt LH | 1 |
| 3 | 301639 | Backplate – Light Module | 2 |
| 4 | 6114 | Model 15 SS ID Bar Red Incandescent | 1 |
| | 304714 | Model 15 SS ID Bar Red LED | 1 |

AR - As Required

## Body

### Lighting Cont.

| ITEM | PART NO. | DESCRIPTION | QTY |
|---|---|---|---|
| 5 | 304701-AA | Lens/Housing – Model 18 Red Incandescent | 2 |
| | 304700-AA | Light – Model 18 Red LED | 2 |
| 6 | 304701-AB | Lens/Housing – Model 18 Yellow Incand. | AR |
| | 304700-AB | Light – Model 18 Red LED | AR |
| 7 | 89979 | Reflector – Red | 2 |
| 8 | 34129 | Grommet – Rubber | 2 |
| 9 | 36393 | Cap Screw – 1/4-20 x 3/4 | 8 |
| 10 | 36418 | Washer – Lock 1/4 | 8 |
| 11 | 36423 | Washer – Flat 1/4 | 10 |
| 12 | 89992 | Grommet – 2-1/2” | 2 |
| 13 | 300150 | Light – Super 45 Red Incandescent | 4 |
| | 304702 | Light – Super 45 Red LED | 4 |
| 14 | 304704 | Grommet – Super 45 | 6 |
| 15 | 300151 | Light – Super 45 B/U Clear | 2 |
| 16 | 44483 | Screw - #10-24 x 3/4 | AR |
| 17 | 56355 | Nut – Lock #10-32 | AR |
| 18 | 304705 | Harness – ID Bar | 1 |
| 19 | 304706 | Harness – S/T/T & Side Marker RH | 1 |
| 20 | 304707 | Harness – S/T/T & Side Marker LH | 1 |
| 21 | 304708 | Harness – Intermediate Side Marker | 1 |
| 22 | 304709 | Harness – Front 14’-16’ | 1 |
| | 304710 | Harness – Front 17’-18’ | 1 |
| | 304711 | Harness – Front 19’-21’ | 1 |
| 23 | 9011-0-0012 | Bracket – Model 15 LIC Gray Conduit – Flexible 1/2” | 1 |
| 24 | 9011-0-0011 | Lamp – Tag Maker Conduit – Flexible 5/8” | 1 |
| 25 | 46168 | Conduit – Flexible 1/23/4" | AR |
| 26 | 73926 | Conduit – Flexible 5/8"Gasket – Mounting Model 18 | AR |
| 27 | 56356 | Conduit – Flexible 3/4"Pigtail – with Weatherpack | 9.5 ft |
| 28 | 304712 | Gasket – Mounting Model 18 Bracket – Model 15, Incandescent only | AR |
| 29 | 304713 | Pigtail – with Weatherpack Lamp – Tag Marker, Incandescent only | AR |
| 30 | 9011-0-7016 | Lamp – Yellow 2-1/2 Round Incandescent | 2 |
| | 9011-0-7047 | Lamp – Yellow 2-1/2 Round LED | 2 |
| 31 | 26562 | P-Clamp – Tubing 1/2" | 3 |

AR - As Required

## Endgate

### Hydraulic Endgate

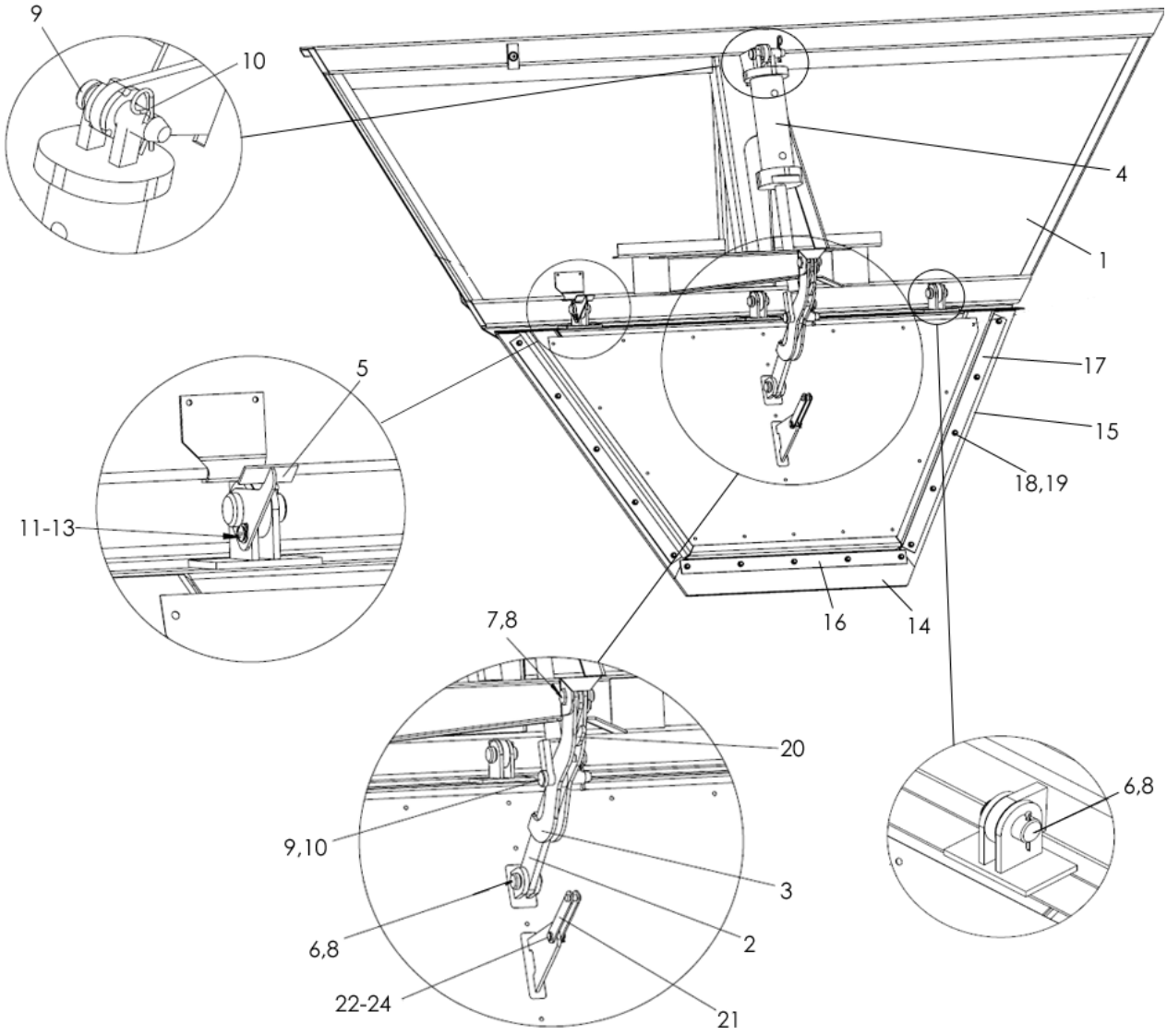


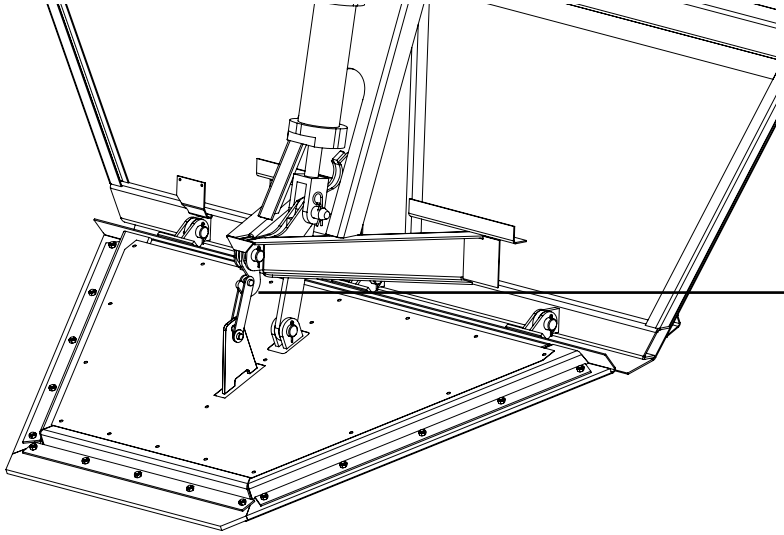

## Endgate

### Hydraulic Endgate Cont.

| ITEM | PART NO. | DESCRIPTION | QTY |
|---|---|---|---|
| 1 | 300206 | Endgate – Wldmt Lower | 1 |
| 2 | 300001 | Link – Drive Lower Endgate | 1 |
| 3 | 300059 | Linkage – Wldmt Rear | 1 |
| 4 | 300099 | Cylinder – Hydraulic | 1 |
| 5 | 307134 | Sensor – Wldmt Mount | 1 |
| 6 | 300110 | Pin – Clevis 1 x 1-1/2 | 4 |
| 7 | 300111 | Pin – Clevis 1 x 1-3/4 | 1 |
| 8 | 20818 | Pin – Cotter 1/8 x 1-1/4 | 5 |
| 9 | 36719 | Pin – Clevis 1 x 3-3/4 | 2 |
| 10 | 40576 | Pin – Hair | 2 |
| 11 | 56258 | Screw – Truss Head 1/4-20 x 1/2 | 1 |
| 12 | 36423 | Washer – Flat 1/4 | 1 |
| 13 | 36418 | Washer – Lock 1/4 | 1 |
| 14 | 306702 | Seal – Bottom Endgate | 1 |
| 15 | 306703 | Seal – Side Endgate | 2 |
| 16 | 306700 | Retainer – Seal Bottom | 1 |
| 17 | 306701 | Retainer – Seal Side | 2 |
| 18 | 20036 | Cap Screw – 5/16-18 x 1 | 15 |
| 19 | 20677 | Nut – Lock 5/16 | 15 |
| 20 | 309044 | Hook - Lockout | 1 |
| 21 | 309048 | Link - Wldmt Lockout | 1 |
| 22 | 21026 | Pin - Clevis 1/2 x 1 | 1 |
| 23 | 20261 | Washer - Flat 1/2 | 1 |
| 24 | 20817 | Pin - Cotter 1/8 x 1 | 1 |

# Endgate

## Internal Endgate

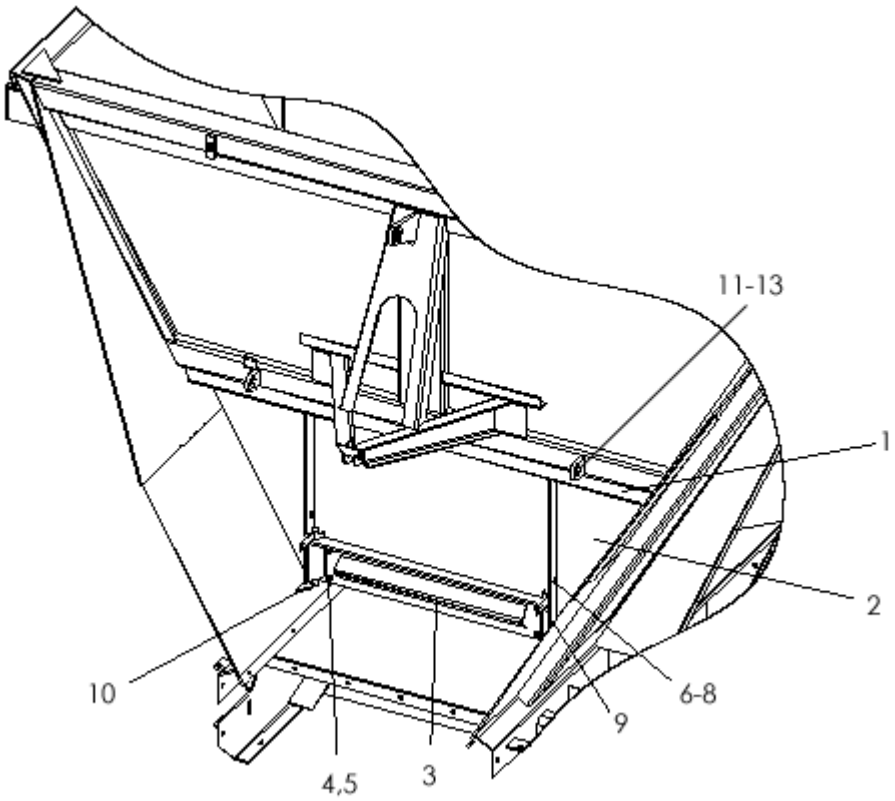


NOTE: Swinging endgate removed for clarity.

**WARNING** Ensure Safety Lockout is engaged before making any adjustments to the Endgate or optional Internal Gate.

| ITEM | PART NO. | DESCRIPTION | QTY |
|---|---|---|---|
| 1 | 306328 | Gate – Wldmt Upper | 1 |
| 2 | 306329 | Gate – Wldmt Lower | 1 |
| 3 | 306339 | Insert – Wldmt Gate | 1 |
| 4 | 20065 | Cap Screw – 3/8-16 x 3/4 | 4 |
| 5 | 20678 | Nut – Lock 3/8-16NC | 4 |
| 6 | 20003 | Cap Screw – 1/4-20 x 3/4 | 2 |
| 7 | 20642 | Nut – Hex 1/4-20NC | 2 |
| 8 | 20676 | Nut – Lock 1/4-20NC | 2 |
| 9 | 306336 | Pin – Wldmt | 2 |
| 10 | 306341 | Stop – Gate Internal | 2 |
| 11 | 306342 | Pin – Clevis 5/8 x 1-1/4 | 2 |
| 12 | 20697 | Washer – Flat 5/8 | 2 |
| 13 | 20817 | Pin – Cotter 1/8 x 1 | 2 |

## Conveyor

### #4 Belt-Over-Chain Conveyor

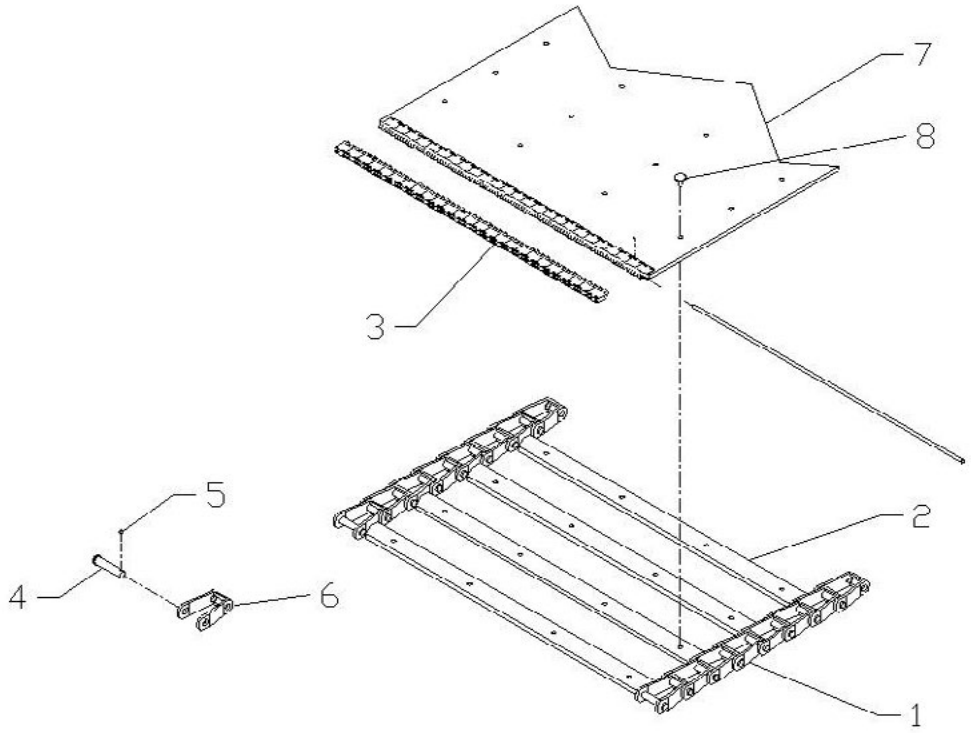


**NOTE:** Chain PN effective with Serial Number 388144

| ITEM | PART NO. | DESCRIPTION | QTY |
|---|---|---|---|
| 1 | 312198-AA | #4 Belt-Over-Chain – 14’ Unit | |
| | 312198-AB | #4 Belt-Over-Chain – 15’ Unit | |
| | 312198-AC | #4 Belt-Over-Chain – 16’ Unit | |
| | 312198-AD | #4 Belt-Over-Chain – 17’ Unit | |
| | 312198-AE | #4 Belt-Over-Chain – 18’ Unit | |
| | 312198-AF | #4 Belt-Over-Chain – 19’ Unit | |
| | 312198-AG | #4 Belt-Over-Chain – 20’ Unit | |
| | 312198-AH | #4 Belt-Over-Chain – 21’ Unit | |
| 2 | 308532 | Crossbar | AR |
| 3 | 73319 | Kit – Splicer | 1 |
| | 56405 | Pin – Connecting | 1 |
| 4 | 36697 | Pin – Pintle Chain | AR |
| 5 | 20817 | Pin – Cotter | AR |
| 6 | 36699 | Link – Pintle Chain | AR |
| 7 | 56281 | Belt – Conveyor, Specify Length | AR Ft |
| 8 | 308533 | Screw | AR |

AR - As Required

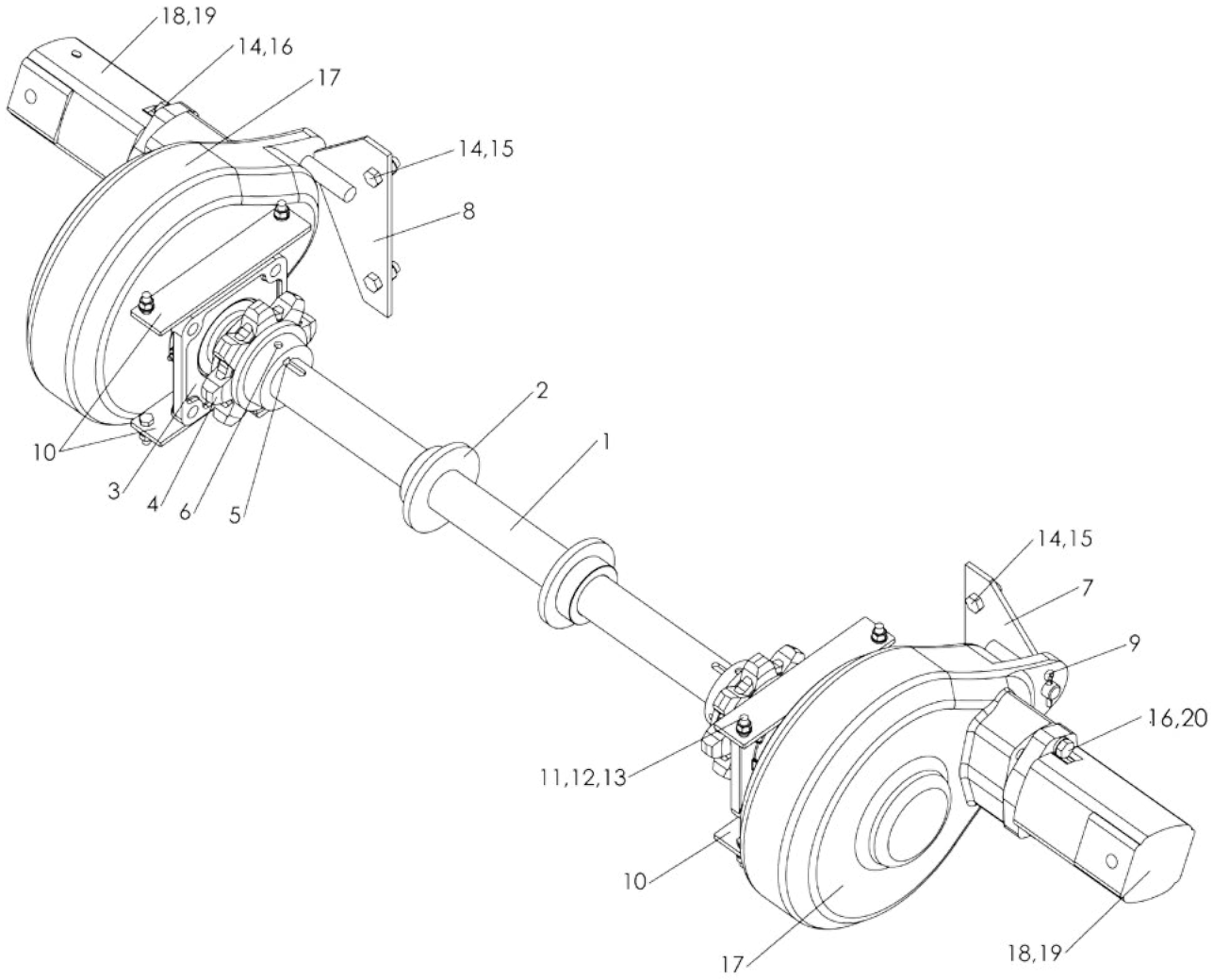
18,19
14,16
17
14,15
8
2
1
10
3
4
6
5
14,15
7
9
16,20
11,12,13
10
17
18,19

## Conveyor

### Conveyor Drive Cont.

| ITEM | PART NO. | DESCRIPTION | QTY |
|---|---|---|---|
| | 300247-AA | Gear Case - Assy RH w/ Motor, Includes 14, 16-20 | |
| | 300247-AB | Gear Case - Assy LH w/ Motor, Includes 14, 16-20 | |
| 1 | 86207-X1 | Shaft – Drive | 1 |
| 2 | 300126 | Collar – Wldmt | 2 |
| 3 | 6465 | Bearing | 2 |
| 4 | 88276 | Sprocket | 2 |
| 5 | 6131 | Key – Square | 2 |
| 6 | 20748 | Screw – Set | 2 |
| 7 | 82550-X1 | Bracket – Torque Arm LH | 1 |
| 8 | 82549-X1 | Bracket – Torque Arm RH | 1 |
| 9 | 20833 | Pin – Cotter 1/4 x 1-1/2 | 2 |
| 10 | 82882 | Guide – Bearing | 4 |
| 11 | 20068 | Cap Screw – 3/8 x 1-1/4 | 8 |
| 12 | 20712 | Washer – Lock 3/8 | 8 |
| 13 | 20644 | Nut – Hex 3/8 | 8 |
| 14 | 20128 | Cap Screw 1/2 x 1-1/4 | 4 |
| 15 | 20680 | Nut – Lock 1/2 | 4 |
| 16 | 30227 | Washer – Lock Socket 1/2 | 4 |
| 17 | 86206 | Gear Case – 6:1 HD Assy | 2 |
| 18 | 87592<br>309460 | Motor - Hydraulic 14.9 CID (14’-17’ Units)<br>Motor - Hydraulic 18.7 CID (18’-21’ Units) | 2<br>2 |
| 19 | 74524 | Gasket | 2 |
| 20 | 89701 | Cap Screw - Socket 1/2 x 1-1/2 GR8 | 4 |

## Conveyor

### Conveyor Idler

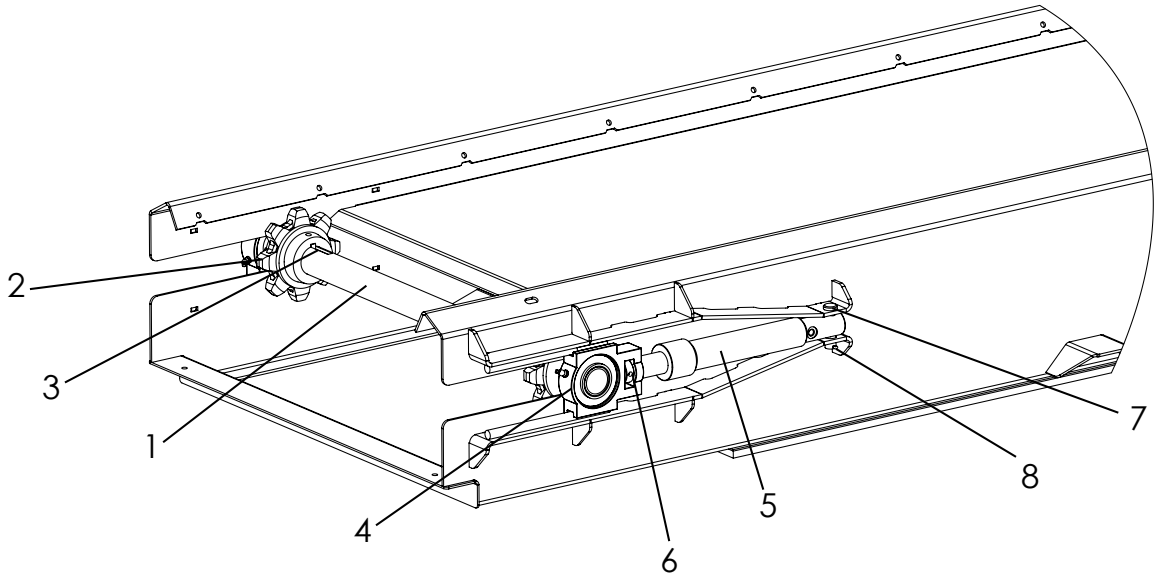


| ITEM | PART NO. | DESCRIPTION | QTY |
|---|---|---|---|
| 1 | 86018-X1 | Shaft – Idler | 1 |
| 2 | 88276 | Sprocket | 2 |
| 3 | 6131 | Key – Square | 2 |
| 4 | 22511-X1 | Bearing | 2 |
| 5 | 311359 | Cylinder - Ram 1-1/2 x 8” | 2 |
| | 312938 | Kit - Seal, Snap-in Rod Wiper | 1 |
| | 312939 | Kit - Seal, Press-in Rod Wiper | 1 |
| 6 | 2696 | Collar - Set 1” | 2 |
| 7 | 89630 | Pin - Clevis 3/4 x 2-3/4” | 2 |
| 8 | 20822 | Pin - Cotter | 2 |

## Conveyor

### Conveyor Chain Oiler

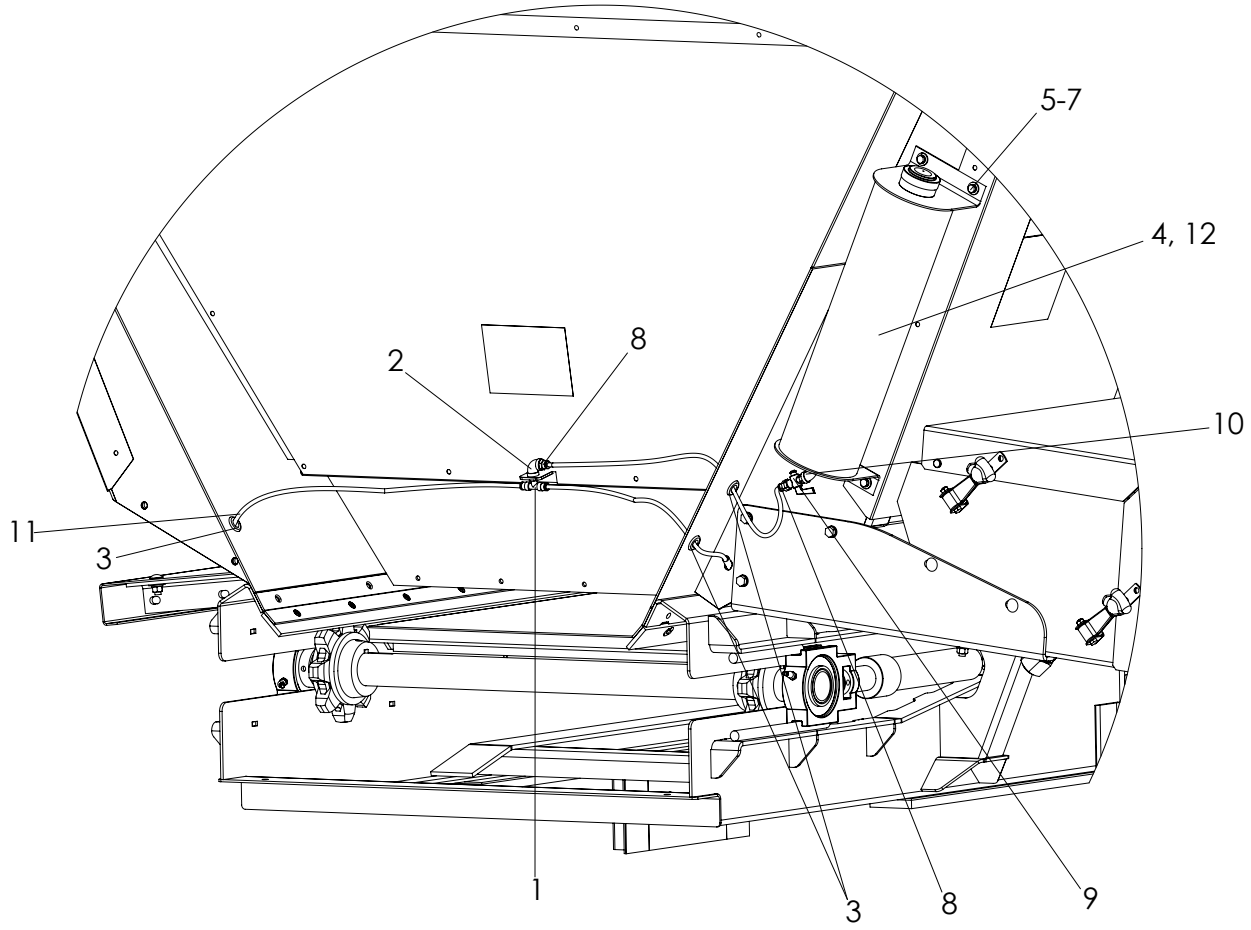


| ITEM | PART NO. | DESCRIPTION | QTY |
|---|---|---|---|
| 1 | 97801 | Tee – Male Branch Swivel | 1 |
| 2 | 6006 | Elbow – 90° Elbow 1-1/4 NPT | 1 |
| 3 | 21985 | Grommet – Rubber | 3 |
| 4 | 300244 | Tank – Wldmt Oiler | 1 |
| 5 | 20003 | Cap Screw – 1/4-20 x 3/4 | 4 |
| 6 | 20691 | Washer – Flat 1/4 | 4 |
| 7 | 20710 | Washer – Lock 1/4 | 4 |
| 8 | 97806 | Connector – Male | 2 |
| 9 | 82917 | Valve – Shut-off | 1 |
| 10 | 21990 | Elbow – Street 45° 1/8 NPT | 1 |
| 11 | 82920 | Tubing – 1/4 OD Flexible Nylon | 7 ft |
| 12 | 21476 | Decal – Conveyor Chain Life | 1 |

## Conveyor

### Chain Shields

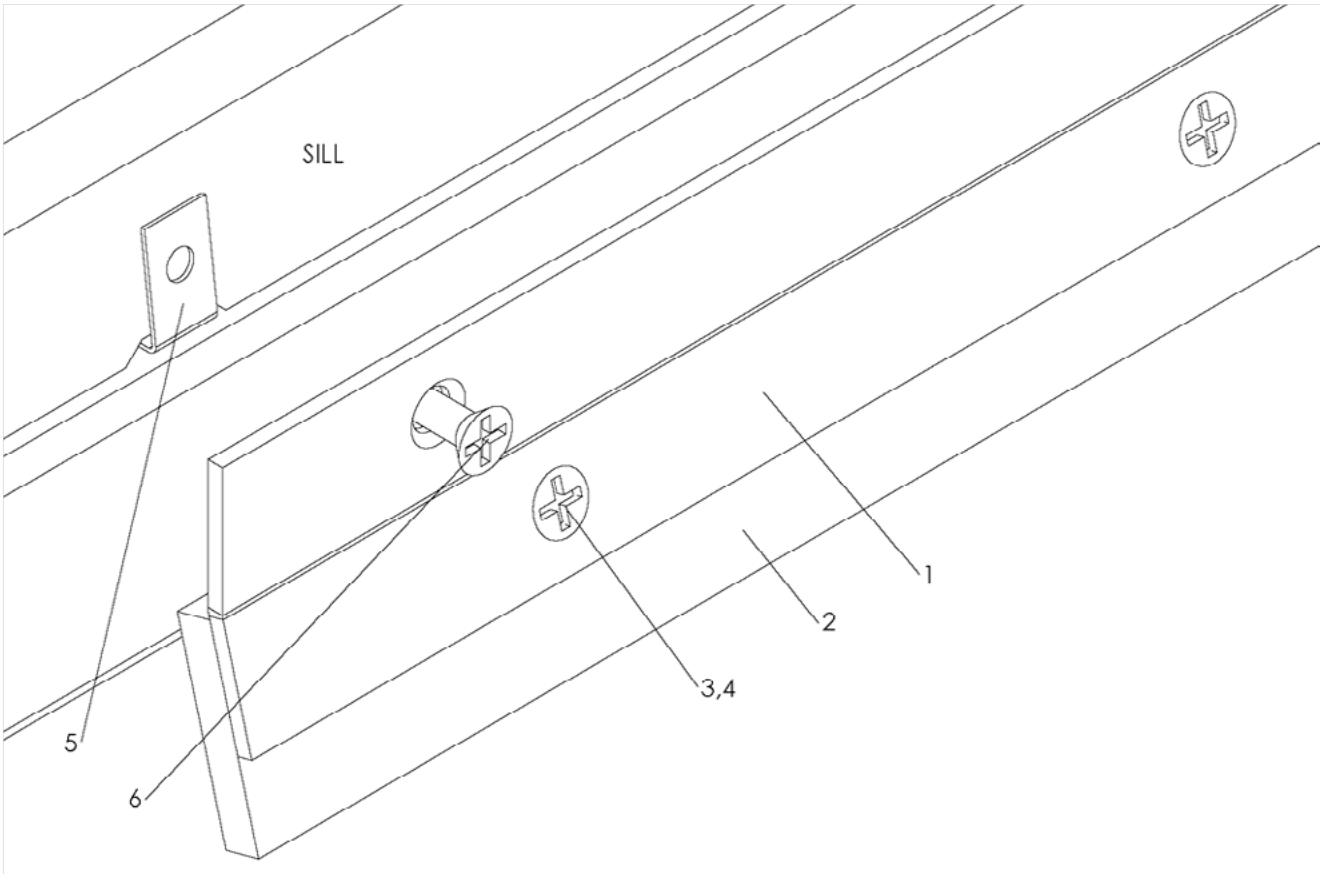

## Conveyor

### Chain Shields Cont.

| ITEM | PART NO. | DESCRIPTION | QTY |
|---|---|---|---|
| 1 | | Shield – Wldmt Chain | |
| | 300253-AA | 14’ | 2 |
| | 300253-AB | 15’ | 2 |
| | 300253-AC | 16’ | 2 |
| | 300253-AD | 17’ | 2 |
| | 300253-AE | 18’ | 2 |
| | 300253-AF | 19’ | 2 |
| | 300253-AG | 20’ | 2 |
| | 300253-AH | 21’ | 2 |
| 2 | | Belt – Sealer | |
| | 300127-AA | 14’ | 2 |
| | 300127-AB | 15’ | 2 |
| | 300127-AC | 16’ | 2 |
| | 300127-AD | 17’ | 2 |
| | 300127-AE | 18’ | 2 |
| | 300127-AF | 19’ | 2 |
| | 300127-AG | 20’ | 2 |
| | 300127-AH | 21’ | 2 |
| 3 | 20617 | Screw – Flat Head 1/4-20 x 1/2 | AR |
| 4 | 88931 | Nut – Tee 1/4 x 1/4 | AR |
| 5 | 300252 | U-Nut – 1/4-20 | AR |
| 6 | 20621 | Screw – Flat Head 1/4-20 x 1 | AR |

AR - As Required

## Conveyor

### Remote Grease Zerks

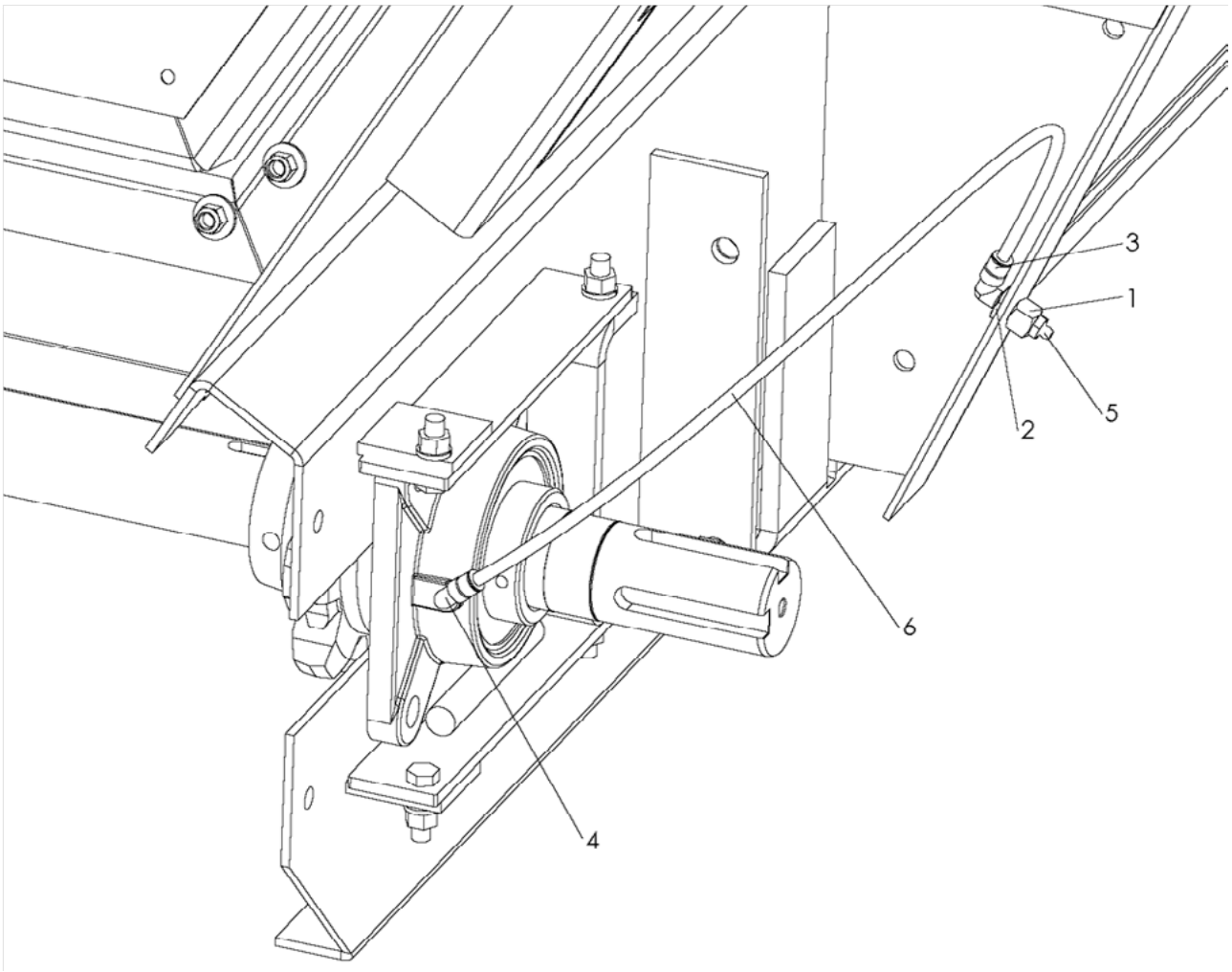


| ITEM | PART NO. | DESCRIPTION | QTY |
|---|---|---|---|
| 1 | 301332 | Connector – Bulkhead | 2 |
| 2 | 301333 | Nut – Lock Connector | 2 |
| 3 | 301335 | Fitting – 90° Male 1/4-28 | 2 |
| 4 | 301336 | Fitting – 90° Male Swivel 1/8 NPT | 2 |
| 5 | 6069 | Zerk – Grease | 2 |
| 6 | 301338 | Tube – 1/4 OD Black Nylon | 4 ft |

## Conveyor

### Wiper - Front

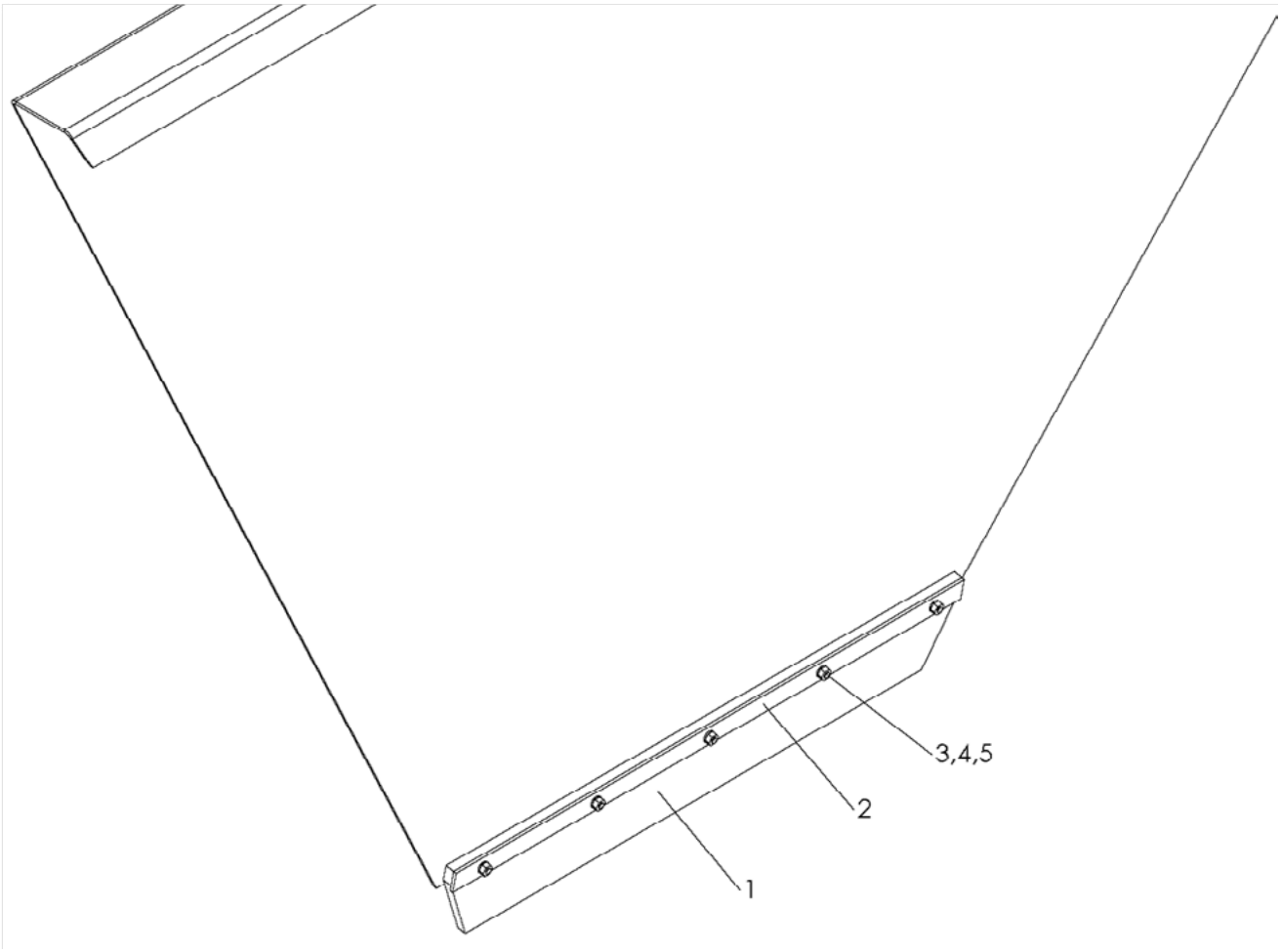


| ITEM | PART NO. | DESCRIPTION | QTY |
|---|---|---|---|
| 1 | 300105 | Wiper - Front | 1 |
| 2 | 300050 | Retainer - Front Wiper | 1 |
| 3 | 20005 | Cap Screw - 1/4-20 x 1 | 5 |
| 4 | 20710 | Washe r - Lock 1/4 | 5 |
| 5 | 20642 | Nut - Hex 1/4 | 5 |

## Conveyor

### Scraper - Rear & Cover

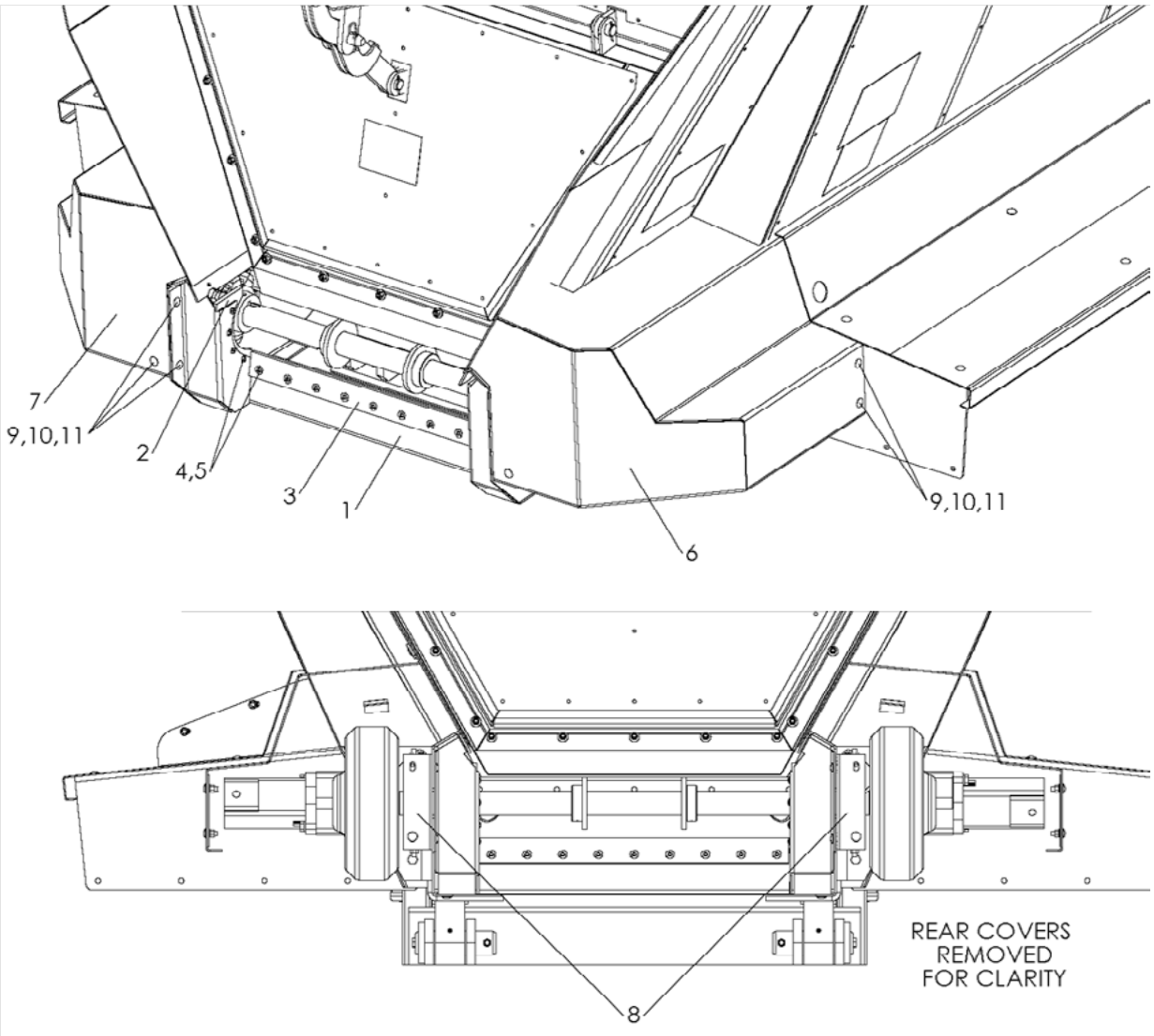

## Conveyor

### Scraper - Rear & Cover Cont.

| ITEM | PART NO. | DESCRIPTION | QTY |
|---|---|---|---|
| | 312109 | Wiper – Assy Rear, Includes 1-5 | |
| 1 | 312110 | Wiper – Wldmt Rear | 1 |
| 2 | 312113 | Wiper – Scraper Side | 2 |
| 3 | 312114 | Wiper – Scraper Bottom | 1 |
| 4 | 20624 | Screw – Truss Head 1/4-20 x 1/2 | 17 |
| 5 | 88931 | Nut – Tee 1/4 x 1/4 | 17 |
| 6 | 300224-AA | Cover – Wldmt Rear RH | 1 |
| 7 | 300224-AB | Cover – Wldmt Rear LH | 1 |
| 8 | 300091 | Bracket – Rear Cover | 2 |
| 9 | 20318 | Bolt – Carriage 3/8 x 1 | 12 |
| 10 | 20712 | Washer – Lock 3/8 | 12 |
| 11 | 20644 | Nut – Hex 3/8 | 12 |

# Hydraulics

## Body Hydraulics

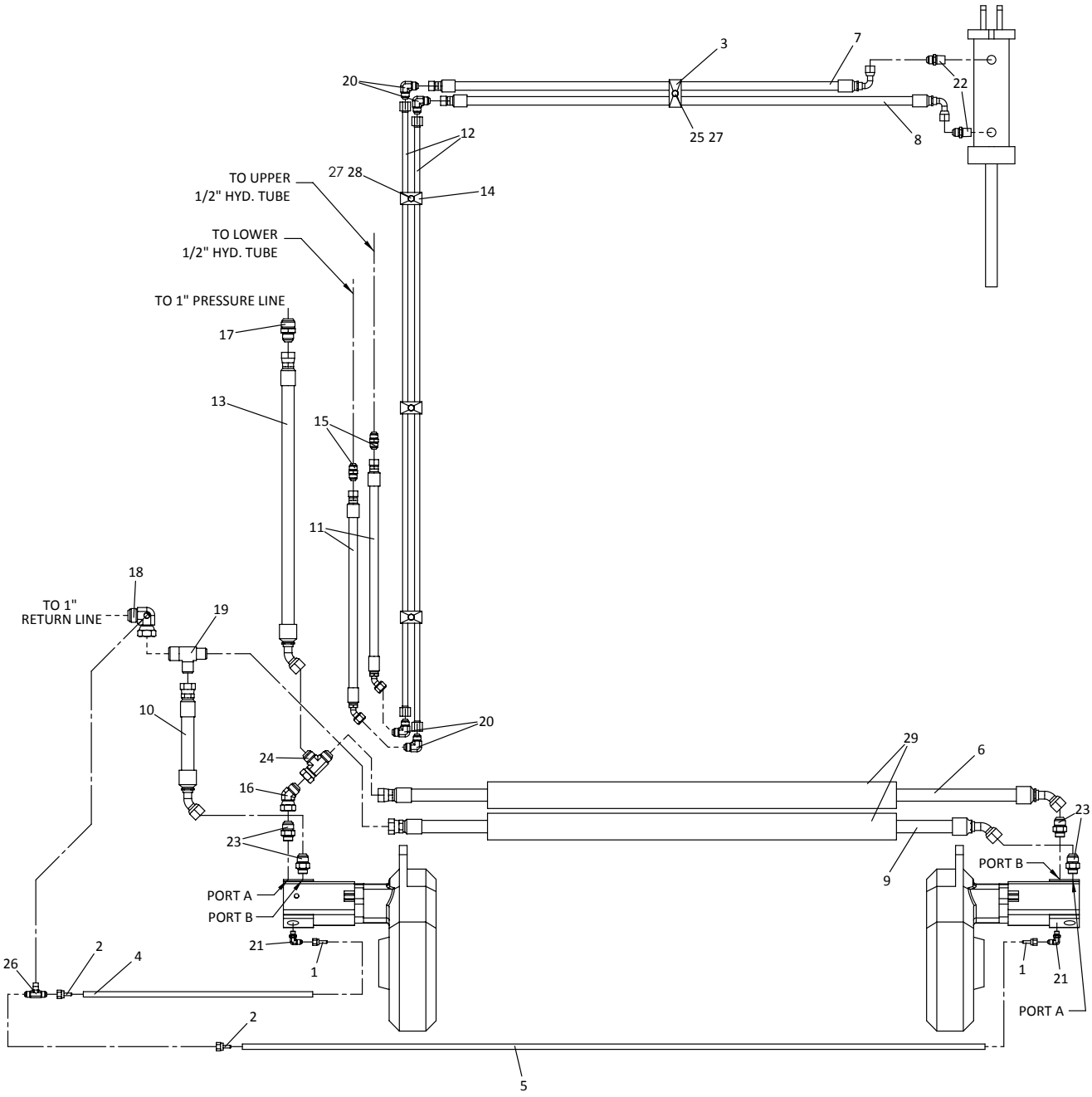

## Hydraulics

### Body Hydraulics Cont.

| ITEM | PART NO. | DESCRIPTION | QTY |
|---|---|---|---|
| 1 | 26543 | Fitting – Socketless | 2 |
| 2 | 56271 | Fitting – Socketless 9/16 JIC x 1/4 Hose | 2 |
| 3 | 75036 | Clamp – Tubing Twin 3/4" | 1 |
| 4 | 26544-22 | Hose – 1/4” Low Pressure | 1 |
| 5 | 26544-80 | Hose – 1/4" Low Pressure | 1 |
| 6 | 80447-X1 | Hose – Assy 3/4" x 74 | 1 |
| 7 | 300146 | Hose – Assy 1/2 x 42-1/2 | 1 |
| 8 | 300147 | Hose – Assy 1/2 x 51-1/2 | 1 |
| 9 | 56386 | Hose – Return 3/4 x 66-7/8 | 1 |
| 10 | 86857 | Hose – Assy 3/4 x 12.3 | 1 |
| 11 | 300145 | Hose – Assy 1/2 x 22 | 2 |
| 12 | 300148 | Tube – Assy 1/2 x 120 | 2 |
| 13 | 56434 | Hose – Assy 3/4 x 30 | 1 |
| 14 | 300031 | Clamp – Tubing Twin 1/2 | 3 |
| 15 | 56351 | Fitting – 8-8 070101 | 2 |
| 16 | 29782 | Fitting – 12-12 070321 | 1 |
| 17 | 29837 | Fitting – 16-12 070101 | 1 |
| 18 | 76579 | Adapter – Elbow 90 Tapped | 1 |
| 19 | 34710 | Adapter – Tee | 1 |
| 20 | 98919 | Fitting – 8-8 070201 | 4 |
| 21 | 29795 | Fitting – 4-4 070220 | 2 |
| 22 | 29767 | Fitting – 8-8 070102 | 2 |
| 23 | 29753 | Fitting – 12-10 070120 | 4 |
| 24 | 29781 | Tee – Swivel Nut | 1 |
| 25 | 20039 | Cap Screw – 5/16 x 1-3/4 | 1 |
| 26 | 29823 | Fitting – 6-6-4 070425 | 1 |
| 27 | 20711 | Washer – Lock 5/16 | 4 |
| 28 | 20037 | Cap Screw – 5/16 x 1-1/4 | 3 |
| 29 | 96906 | Sleeve – Abrasive | 8 ft |

## Hydraulics

### Hydraulic Control Valve

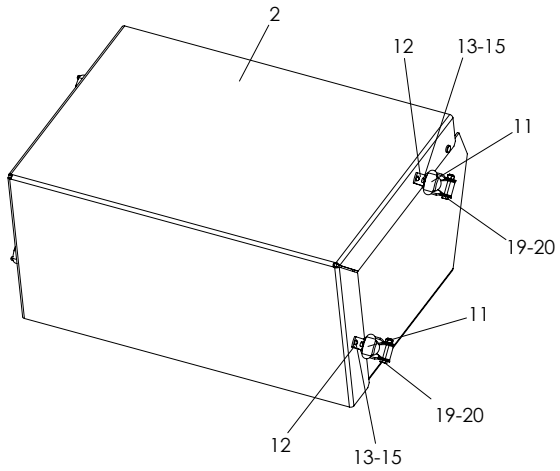


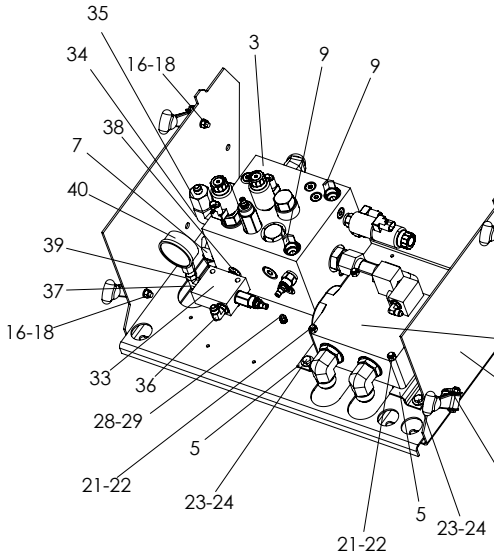


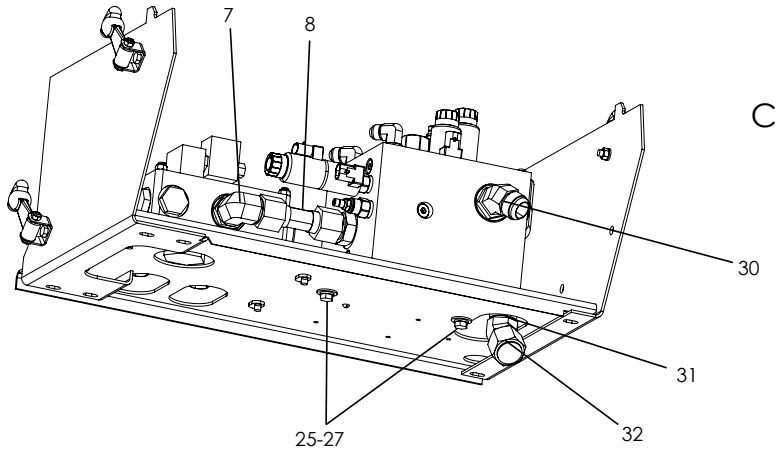


COVER REMOVED FOR CLARITY

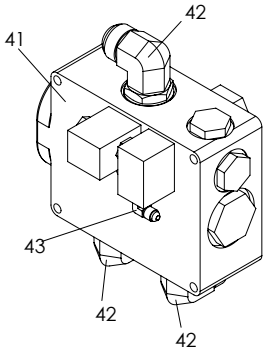


| ITEM | PART NO. | DESCRIPTION | QTY |
|---|---|---|---|
| 1 | 304569 | Support – Wldmt Valve | 1 |
| 2 | 304573 | Cover – Wldmt Valve | 1 |
| 3 | 304638 | Valve – Manifold Assy | 1 |
| 4 | 312249 | Valve – Assy 1” PWM, Includes 41 - 43 | 1 |
| 5 | 304572 | Channel – Valve Mount | 2 |
| 6 | 29803 | Fitting – 16-16 070120 | 1 |
| 7 | 29840 | Fitting – 16-16 070220 | 4 |
| 8 | 304576 | Tube – Assy 1 O.D. x 2-15/16 | 1 |
| 9 | 34822 | Fitting – 8-8 070220 | 2 |

## Hydraulics

### Hydraulic Control Valve Cont.

| ITEM | PART NO. | DESCRIPTION | QTY |
|---|---|---|---|
| 10 | 73344 | Bracket – Anchor | 4 |
| 11 | 73343 | Hook – Rubber | 4 |
| 12 | 57086 | Bracket – Hood | 4 |
| 13 | 44452 | Screw – Round Head #10-24 x 1/2 | 8 |
| 14 | 44451 | Washer – Lock #10 | 8 |
| 15 | 47295 | Nut – Hex #10-24 | 8 |
| 16 | 56858 | Cap Screw – 5/16-16 x 3/4 | 4 |
| 17 | 20711 | Washer – Lock 5/16 | 4 |
| 18 | 20643 | Nut – Hex 5/16-18 | 4 |
| 19 | 42448 | Cap Screw – 1/4-20 x 1-1/2 | 4 |
| 20 | 42034 | Nut – Lock 1/4-20 | 4 |
| 21 | 20046 | Cap Screw – 5/16-18 x 3-1/2 | 4 |
| 22 | 20677 | Nut – Lock 5/16-18 | 4 |
| 23 | 20034 | Cap Screw – 5/16-18 x 3/4 | 4 |
| 24 | 20692 | Washer – Flat 5/16 | 4 |
| 25 | 20064 | Cap Screw – 3/8-16 x 3/4 | 4 |
| 26 | 20712 | Washer – Lock 3/8 | 4 |
| 27 | 20693 | Washer – Flat 3/8 | 4 |
| 28 | 20572 | Screw – #10-24 | 1 |
| 29 | 304571 | Nut – Keps #10-24 | 2 |
| 30 | 34726 | Fitting – 16-16 070320 | 1 |
| 31 | 29806 | Fitting – 16-16 070321 | 1 |
| 32 | 29802 | Fitting – 16 070112 | 1 |
| 33 | 312200 | Valve - Pressure Reducing/Relieving | 1 |
| 34 | 29829 | Fitting - 12-16 070220 | 1 |
| 35 | 56407 | Fitting - 12-6 070123 | 1 |
| 36 | 29774 | Fitting - 6-6 070220 | 1 |
| 37 | 311482 | Fitting - 6-6-6 070429 | 1 |
| 38 | 312201 | Fitting - 6-6 SAE-ORB Swivel Union | 1 |
| 39 | 312206 | Fitting - 6-4 Swivel Nut Female Connector | 1 |
| 40 | 312248 | Gauge - Hyd 1500 PSI w/ built in snubber | 1 |
| 41 | 38576-X4 | Valve - Hydraulic 1” PWM | 1 |
| 42 | 29840 | Fitting - 16-16 070220 | 3 |
| 43 | 29795 | Fitting - 4-4 070220 | 1 |

## Hydraulics

### Hydraulic Hoses

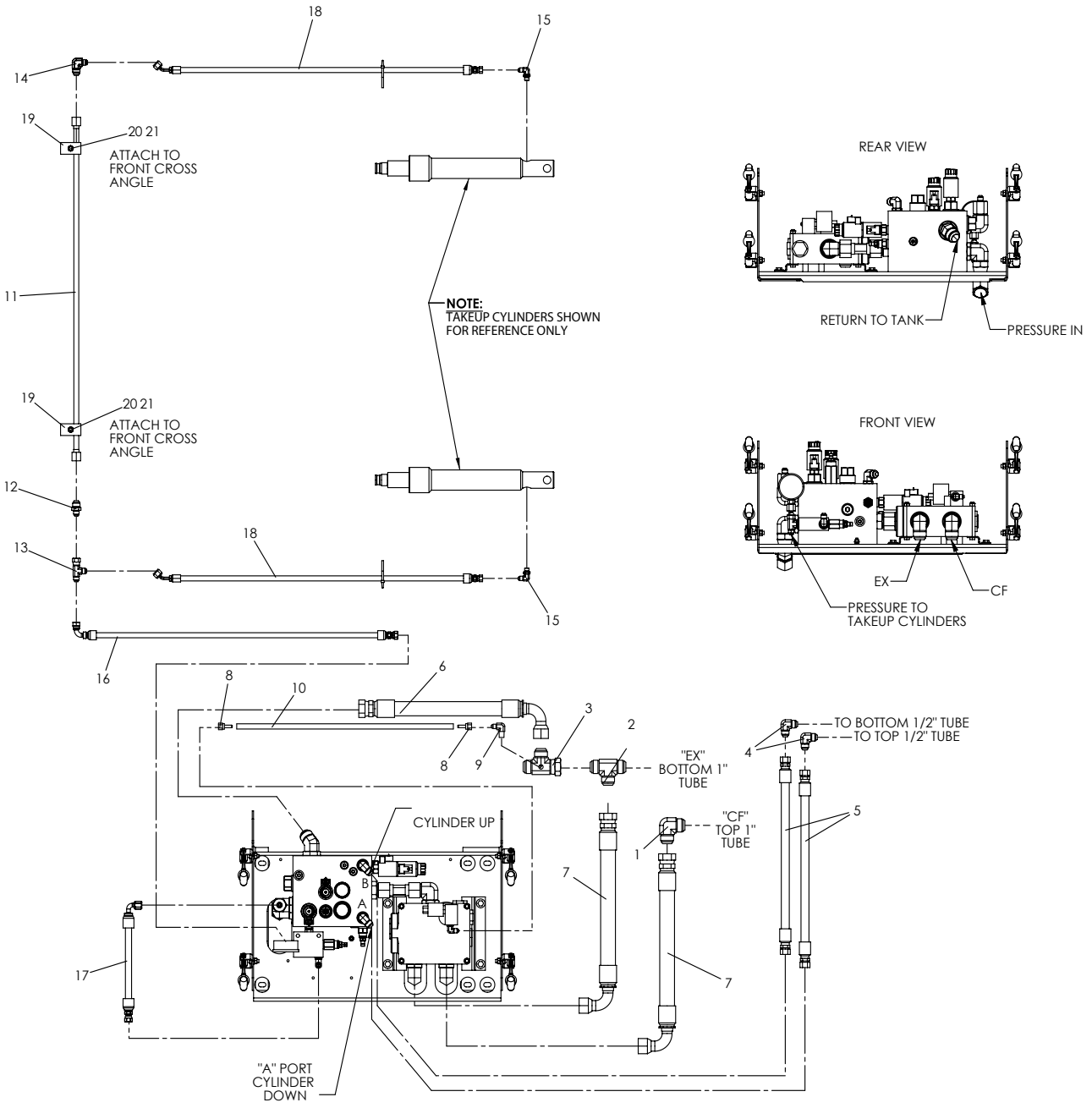

## Hydraulics

### Hydraulic Hoses Cont.

| ITEM | PART NO. | DESCRIPTION | QTY |
|---|---|---|---|
| 1 | 29783 | Fitting – 16-16 070201 | 1 |
| 2 | 34711 | Fitting – 16-16-16 070401 | 1 |
| 3 | 34850 | Fitting – 16-16-16 070432 Tapped | 1 |
| 4 | 98919 | Fitting – 8-8 070201 | 2 |
| 5 | 301649 | Hose – Assy 1/2 x 19-1/2” | 2 |
| 6 | 56444 | Hose – Assy Return 1 x 18-1/2” | 1 |
| 7 | 56110 | Hose – Assy 1 x 19” | 2 |
| 8 | 26543 | End – Hose Fitting | 2 |
| 9 | 34732 | Fitting – 4-4 070202 | 1 |
| 10 | 26544-22 | Hose – 1/4” Low Pressure | 1 |
| 11 | 312210 | Tube - Assy 1/2 OD x 3/64 x 33” | 1 |
| 12 | 312203 | Fitting - 8-6 070101 | 1 |
| 13 | 98724 | Fitting - 6-6-6 070432 | 1 |
| 14 | 312202 | Fitting - 8-6 070201 | 1 |
| 15 | 29795 | Fitting - 4-4 070220 | 2 |
| 16 | 312207 | Hose - Assy 1/4 x 32-2/3 100R1 | 1 |
| 17 | 312208 | Hose - Assy 3/8 x 11-1/2 100R1 | 1 |
| 18 | 312209 | Hose - Assy 1/4 x 33 100R1 | 2 |
| 19 | 300031 | Clamp - Rubing Twin 1/2” | 2 |
| 20 | 20040 | Capscrew - 5/16-18NC x 2 | 2 |
| 21 | 20677 | Nut - Lock 5/16-18NC | 2 |

## Hydraulics

### Body Side Tubes

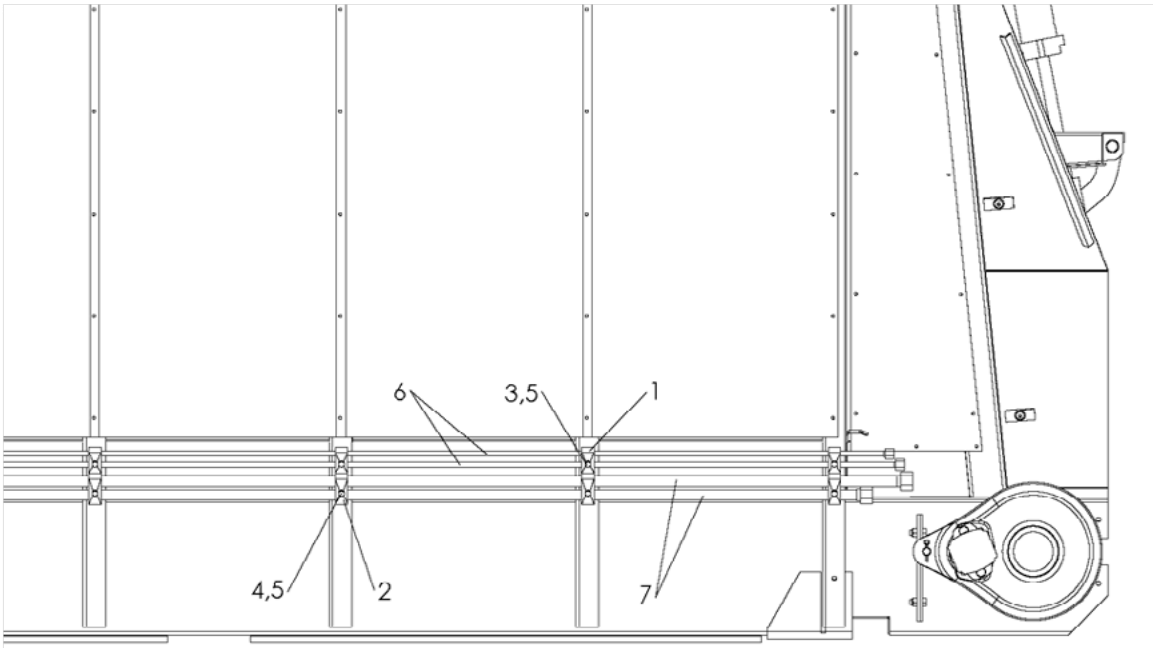


| ITEM | PART NO. | DESCRIPTION | QTY |
|---|---|---|---|
| 1 | 300031 | Clamp – 1/2” Tube | AR |
| 2 | 300033 | Clamp – 1” Tube | AR |
| 3 | 20040 | Cap Screw – 5/16 x 2 | AR |
| 4 | 20041 | Cap Screw – 5/16 x 2-1/4 | AR |
| 5 | 20677 | Nut – lock 5/16 | AR |
| 6 | 300149-AA | Tube – Assy 1/2 O.D. x 138 | 2 |
| | 300149-AB | Tube – Assy 1/2 O.D. x 150 | 2 |
| | 300149-AC | Tube – Assy 1/2 O.D. x 162 | 2 |
| | 300149-AD | Tube – Assy 1/2 O.D. x 174 | 2 |
| | 300149-AE | Tube – Assy 1/2 O.D. x 186 | 2 |
| | 300149-AF | Tube – Assy 1/2 O.D. x 198 | 2 |
| | 300149-AG | Tube – Assy 1/2 O.D. x 210 | 2 |
| | 300149-AH | Tube – Assy 1/2 O.D. x 222 | 2 |
| 7 | 301648-AA | Tube – Assy 1 O.D. x 138 | 2 |
| | 301648-AB | Tube – Assy 1 O.D. x 150 | 2 |
| | 301648-AC | Tube – Assy 1 O.D. x 162 | 2 |
| | 301648-AD | Tube – Assy 1 O.D. x 174 | 2 |
| | 301648-AE | Tube – Assy 1 O.D. x 186 | 2 |
| | 301648-AF | Tube – Assy 1 O.D. x 198 | 2 |
| | 301648-AG | Tube – Assy 1 O.D. x 210 | 2 |
| | 301648-AH | Tube – Assy 1 O.D. x 222 | 2 |

AR - As Required

## Hydraulics

### Hydraulic Control Valve Cont.

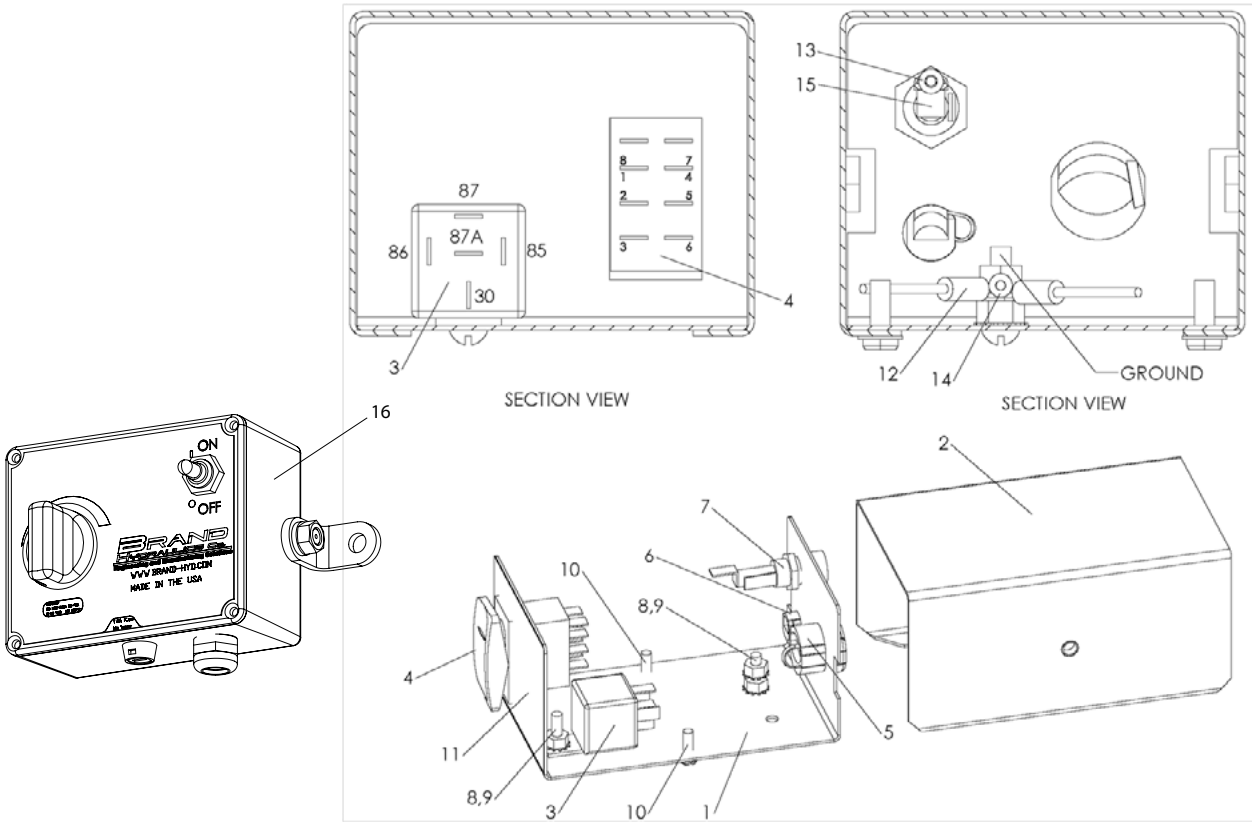


| ITEM | PART NO. | DESCRIPTION | QTY |
|---|---|---|---|
| | 304578 | Panel – Assy Control, Includes 1-15 | |
| 1 | 300274 | Panel – Front | 1 |
| 2 | 304580 | Cover – Wldmt Control Panel | 1 |
| 3 | 300163 | Relay – 12 V | 1 |
| 4 | 300162 | Switch – Rocker Double Pole | 1 |
| 5 | 99490 | Bushing – .56 Strain Relief | 1 |
| 6 | 99491 | Bushing – .27 Strain Relief | 1 |
| 7 | 99492 | Fuse – Holder | 1 |
| 8 | 20572 | Screw – #10-24 x 3/4 | 2 |
| 9 | 304571 | Nut – Keps #10-24 | 3 |
| 10 | 87340 | Screw – #10-24 x 1/2 Self Tapping | 2 |
| 11 | 304579 | Decal – Control Panel | 1 |
| 12 | 304581 | Cable – Assy Control Panel | 1 |
| 13 | 304582 | Wire – Assy Control Panel | 1 |
| 14 | 304583 | Cable – Assy Battery | 1 |
| 15 | 99676 | Fuse – 10 Amp Fast-Acting | 1 |
| 16 | 88260 | Control – Box with 25’ Cable | 1 |

## Decals

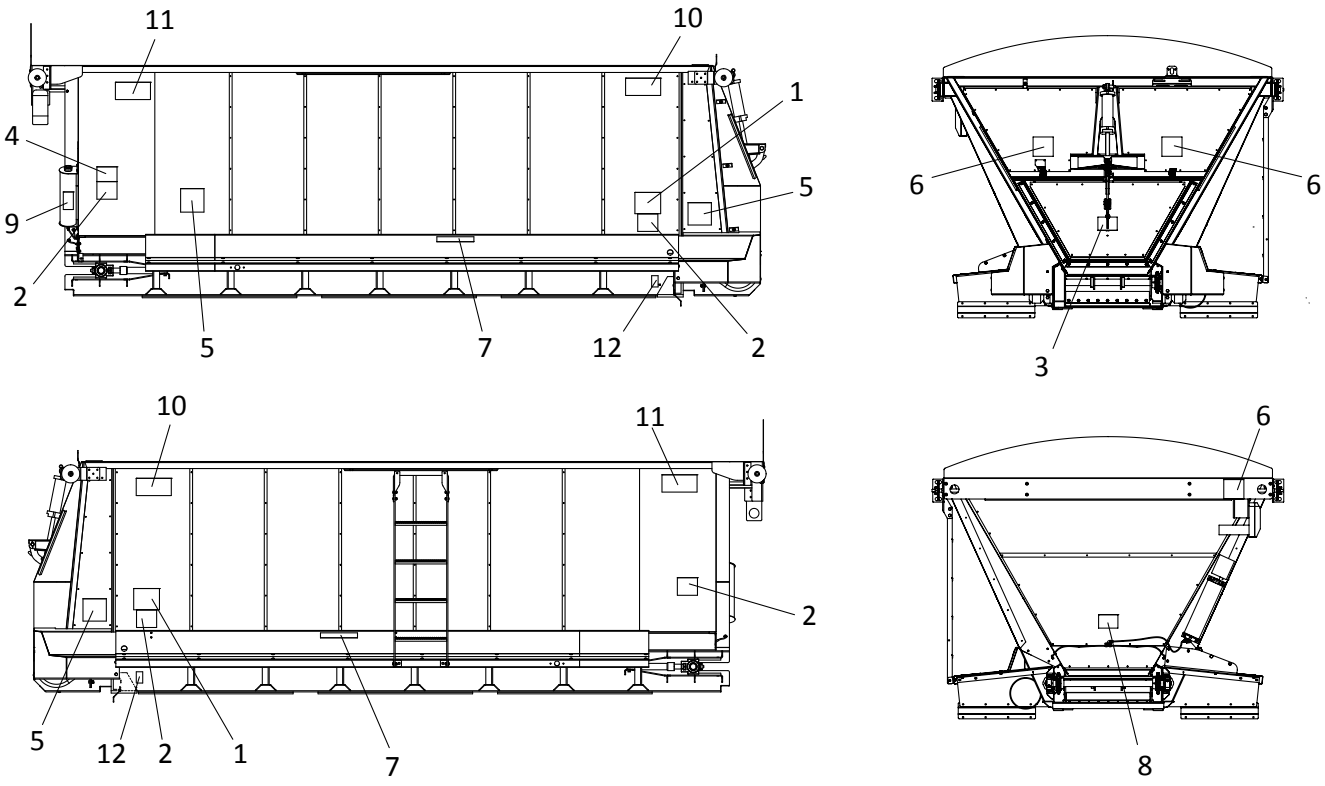


| ITEM | PART NO. | DESCRIPTION | QTY |
|---|---|---|---|
| 1 | 150034 | Decal – Caution, Operation & Maintenance | 2 |
| 2 | 364 | Decal – Danger, Moving Part Hazard | 4 |
| 3 | 366 | Decal – Warning, Swinging Endgate | 1 |
| 4 | 321 | Decal – Caution, Hazardous Material | 1 |
| 5 | 39138 | Decal – Warning, High Pressure Fluid Hazard | 3 |
| 6 | 55241 | Decal – Danger, Pinch Point | 3 |
| 7 | 39200 | Decal – Warning, Falling Hazard | 2 |
| 8 | 55631 | Decal – Warning, Moving Part Hazard | 1 |
| 9 | 21476 | Decal – Notice, Conveyor Chain Life | 1 |
| 10 | 304640 | Decal – T6034 | 2 |
| 11 | 39870 | Decal – Hi-Way Black Large | 2 |
| 12 | 311828 | Decal – Chain Tension | 2 |